Betriebsanleitung / Operating Instructions Ausgabe/Edition: AC

simovert masterdrives

SIEMENS

ATI – Analog Tacho-Interface

1 Definitions and Warnings

Qualified personnel

For the purpose of this documentation and the product warning labels, a "Qualified person" is someone who is familiar with the installation, mounting, start-up, operation and maintenance of the product. He or she must have the following qualifications:

- Trained or authorized to energize, de-energize, ground and tag circuits and equipment in accordance with established safety procedures.
- Trained or authorized in the proper care and use of protective equipment in accordance with established safety procedures.
- Trained in rendering first aid.

DANGER



indicates an **imminently** hazardous situation which, if not avoided, will result in death, serious injury and considerable damage to property.

WARNING



indicates a **potentially** hazardous situation which, if not avoided, could result in death, serious injury and considerable damage to property.

CAUTION



used with the safety alert symbol indicates a potentially hazardous situation which, if not avoided, may result in minor or moderate injury.

CAUTION

used without safety alert symbol indicates a potentially hazardous situation which, if not avoided, may result in property damage.

NOTICE

NOTICE used without the safety alert symbol indicates a potential situation which, if not avoided, may result in an undesirable result or state.

NOTE

For the purpose of this documentation, "Note" indicates important information about the product or about the respective part of the documentation which is essential to highlight.

WARNING



Hazardous voltages are present in this electrical equipment during operation.

Non-observance of the warnings can thus result in severe personal injury or property damage.

Only qualified personnel should work on or around the equipment

This personnel must be thoroughly familiar with all warning and maintenance procedures contained in this documentation.

The successful and safe operation of this equipment is dependent on correct transport, proper storage and installation as well as careful operation and maintenance.

NOTE

This documentation does not purport to cover all details on all types of the product, nor to provide for every possible contingency to be met in connection with installation, operation or maintenance.

Should further information be desired or should particular problems arise which are not covered sufficiently for the purchaser's purposes, the matter should be referred to the local SIEMENS sales office.

The contents of this documentation shall not become part of or modify any prior or existing agreement, commitment or relationship. The sales contract contains the entire obligation of SIEMENS AG. The warranty contained in the contract between the parties is the sole warranty of SIEMENS AG. Any statements contained herein do not create new warranties or modify the existing warranty.

Proper use of Siemens products

WARNING



Siemens products may only be used for the applications described in the catalog and in the relevant technical documentation. If products and components from other manufacturers are used, these must be recommended or approved by Siemens. Proper transport, storage, installation, assembly, commissioning, operation and maintenance are required to ensure that the products operate safely and without any problems. The permissible ambient conditions must be adhered to. The information in the relevant documentation must be observed.

CAUTION



Components which can be destroyed by electrostatic discharge (ESD)

The board contains components which can be destroyed by electrostatic discharge. These components can be easily destroyed if not carefully handled. If you have to handle electronic boards, please observe the following:

Electronic boards should only be touched when absolutely necessary.

The human body must be electrically discharged before touching an electronic board.

Boards must not come into contact with highly insulating materials - e.g. plastic parts, insulated desktops, articles of clothing manufactured from man-made fibers.

Boards must only be placed on conductive surfaces.

Boards and components should only be stored and transported in conductive packaging (e.g. metalized plastic boxes or metal containers).

If the packing material is not conductive, the boards must be wrapped with a conductive packaging material, e.g. conductive foam rubber or household aluminium foil.

The necessary ESD protective measures are clearly shown again in the following diagram:

- a = Conductive floor surface
- b = ESD table
- c = ESD shoes
- d = ESD overall
- e = ESD chain
- f = Cubicle ground connection

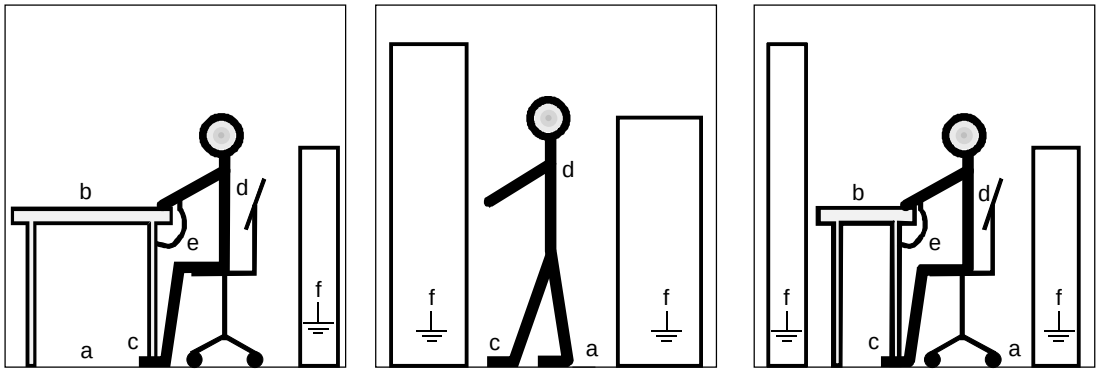

ESD protective measures

Residual risks of Power Drive Systems (PDS)

DANGER



The components for the controller and drive of a Power Drive System (PDS) are authorized for industrial and commercial use in industrial networks. Their use in public networks requires a different planning and/or additional measures.

It is only permissible to operate these components in enclosed housings or in superordinate control cabinets and when all protective devices and protective covers are used.

These components may only be handled by qualified and trained specialist persons who are familiar with and observe all the safety instructions on the components and in the relevant technical user documentation.

The machine manufacturer must take into account the following residual risks resulting from the components for the controller and drive of a Power Drive System (PDS) when evaluating the risk of his machine in accordance with the EC machinery guideline.

1. Undesired movements of driven machine components during commissioning, operation, maintenance and repair, e.g. as a result of
   - HW and/or SW errors in the sensors, controller, actuators and connection system
   - Reaction times of the controller and the drive
   - Operation and/or ambient conditions not compliant with the specification
   - Errors in parameterization, programming, wiring and installation
   - Use of radio units/mobile phones in the direct vicinity of the controller
   - External influences/damage.
2. Extraordinary temperatures and emissions of light, noises, particles and gases, e.g. as a result of
   - Component failure
   - Software errors
   - Operation and/or ambient conditions not compliant with the specification
   - External influences/damage.
3. Dangerous contact voltages, e.g. as a result of
   - Component failure
   - Influence upon electrostatic charging
   - Induction of voltages in the case of moving motors
   - Operation and/or ambient conditions not compliant with the specification
   - Condensation/conductive contamination
   - External influences/damage.
4. Operational electrical, magnetic and electromagnetic fields that may pose a risk to people with a pacemaker, implants or metallic items if they are too close.
5. Release of pollutants and emissions if components are not operated or disposed of properly.

For additional information on the residual risks emanating from the components of the PDS, please refer to the relevant chapters of the technical user documentation.

DANGER



Electrical, magnetic and electromagnetic fields (EMF) that occur during operation can pose a danger to persons who are present in the direct vicinity of the product – especially persons with pacemakers, implants, or similar devices.

The relevant directives and standards must be observed by the machine/plant operators and persons present in the vicinity of the product. These are, for example, EMF Directive 2004/40/EEC and standards EN 12198-1 to -3 pertinent to the European Economic Area (EEA), as well as accident prevention code BGV 11 and the associated rule BGR 11 "Electromagnetic fields" of the German employer's liability accident insurance association pertinent to Germany.

These state that a hazard analysis must be drawn up for every workplace, from which measures for reducing dangers and their impact on persons are derived and applied, and exposure and danger zones are defined and observed.

The safety information in the Storage, Transport, Installation, Commissioning, Operation, Maintenance, Disassembly and Disposal sections must also be taken into account.

2 Product Description

Analog tachometers generate a DC voltage which is proportional to the speed.

The voltage at maximum speed is a function of the actual tachometer type, and generally lies between 10 V and 300 V.

Using a voltage divider on the ATI (analog tachometer interface), a voltage is derived from the tachometer voltage, which can be directly processed by the converter control board "Control Unit" (CU).

NOTE

Closed-loop speed control with analog tachometer can be used in the range from 1 RPM to 6000 RPM.

3 Installation, Connecting-up

ATI is accomodated in a housing and is snapped-onto a mounting rail, refer to Fig. 3. The components must be wired-up on the plant side.

NOTE

Screened cables must be used to prevent EMC disturbance. The screen must be connected at one end.

NOTE

Power and control cables must be separately routed.

4 Start-up

WARNING



It is **not** permissible to work on the board with the power supply switched-on or when the motor is rotating. Voltages > 60 V can occur on the board. Adjustment may only be carried-out by adequately trained and knowledgeable personnel.

Prerequisites

- The standard converter start-up with "closed-loop speed control" has been completed

Start-up steps for the 6SE70 converter

- Determine the maximum possible tachometer voltage from the tachometer rating plate and the required motor speed at rated system speed.
  - Connect up the tachometer at terminal strip ATI:8-11
  - Create the connection between the AT1 terminal strip:1 -2 and the analog input 1 of the control board:
    CU1 / CU2: -X102: 30 - 31
    CUVC: -X102: 15 -16
  - Create a continuous shield from the tachometer to the converter and connect the shield ground on the converter through a large surface area (see Fig. 2).
  - Adjust the parameterization at the basic unit (see parameter list for description):

CU1 / CU2	CUVC	Parameter name
P208	P130	S. speed actual value
P210	P138	an. tach. adjust.
P652	P631	set the CU-AE offset to 0

  - If possible, de-couple the motor from the drive
  - Select the monitoring parameter n (act. encoder) at the operator control panel / converter:
    CU1 / CU2: r214
    CUVC: r218
  - Accelerate the drive in steps (20, 50, 100 %) (encoder-free control or v/f characteristic), and check the speed using a handheld tachometer
  - Check the speed at the operator control panel / converter (monitoring parameter r214 (CU1 / CU2) or r218 (CUVC)), and if required, adjust using potentiometers R1/R2; 10 V at maximum speed.
    If the load resistors are too high, base load resistors can be mounted on the solder pins. (refer to Fig. 1).
  - Activate the closed-loop speed control.

If another time constant is required other than specified in table 1, then an additional smoothing capacitor can be calculated according to the following formula.

$$C_2 = \left(\frac{\tau_{new}}{\tau_{old}} - 1 \right) C_1$$

Solder pins are available for additional smoothing with capacitor C2.

Rated input voltage	Time constant	Load resistors
60 V	approx. 400 µs at 10 V approx. 470 µs at 60 V	approx. 50 kΩ
150 V	approx. 540 µs at 60 V approx. 460 µs at 150 V	approx. 100 kΩ
300 V	approx. 530 µs at 150 V approx. 470 µs at 300 V	approx. 200 kΩ

Table 1 Resistor-dependent smoothing time constants

5 Technical Data

Board name		ATI (analog tachometer interface)
Order No.		6SE7090-0XX84-3DF0
Rated input voltage		300 V
Rated output voltage		0 to ±10 V
Cooling medium temperature		0 °C to +55 °C (32 °F to 131 °F)
Storage temperature		–25 °C to +70 °C (–13 °F to 158 °F)
Transport temperature		–25 °C to +70 °C (–13 °F to 158 °F)
Environmental class		
– humidity:	3K3	acc. to DIN IEC 721 Part 3-3 / 04.90
– pollutant exposure:	3C2	acc. to DIN IEC 721 Part 3-3 / 04.90
Pollution level	2	DIN VDE 0110 Part 1/01.89. Moisture condensation is not permissible
Overvoltage category	II	DIN VDE 0110 Part 2 / 01.89
Degree of protection	IP20	DIN VDE 0470 Part1 / 11.92 ≙ EN 60529
Mechanical stability		DIN IEC 68-2-6 / 06.90

	Frequency range	Constant amplitude of the	
		deflection	acceleration
	Hz	mm	m/s^2 (g)
– when stationary	10 to 60	0.35	
	above 60 to 500		49 (5)
– during transport	5 to 9	3.5	
	above 9 to 500		9.8 (1)

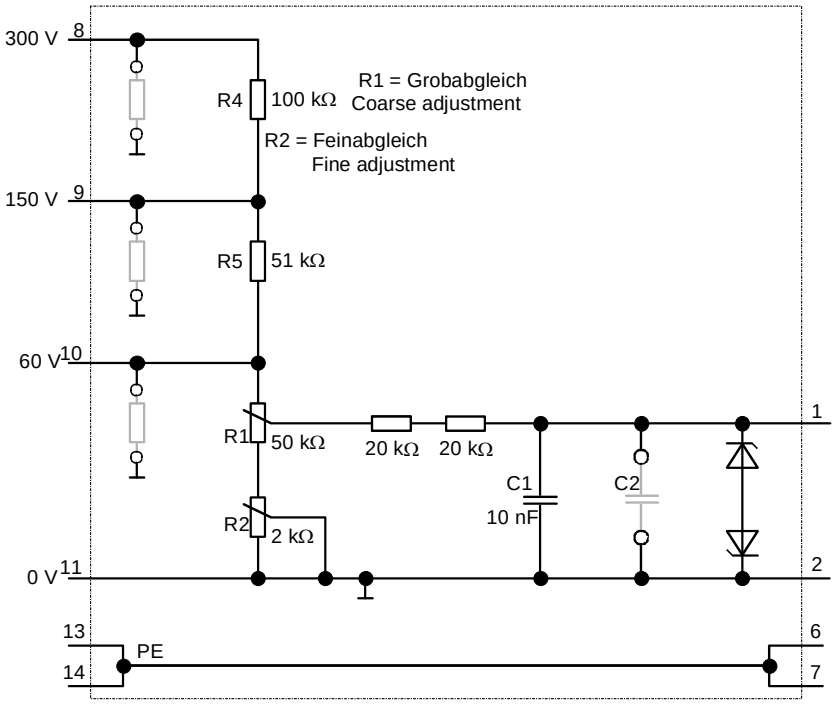

Leiterquerschnitt der Anschlussklemmen		
mm^2		AWG*
massiv	flexibel	
0,2 - 4	0,2 - 2,5	24 - 12
*AWG = American Wire Gauge		

Conductor Cross-sections of the terminals		
mm^2		AWG*
massive	flexible	
0.2 - 4	0.2 - 2.5	24 - 12
*AWG = American Wire Gauge		

Bild 1 *Übersichtsschaltplan: ATI*

Fig. 1 *Block diagram: ATI*

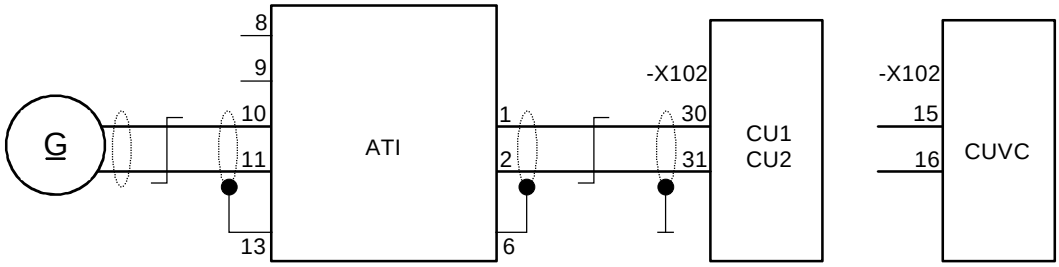

Bild 2 *Anschlussbeispiel der ATI-BGR am Analogeingang 2 der CU-BGR mit einem 60-V-Analogtacho:*

Fig. 2 *Example of connecting the ATI to the analog input 2 of the CU with a 60V analog tacho:*

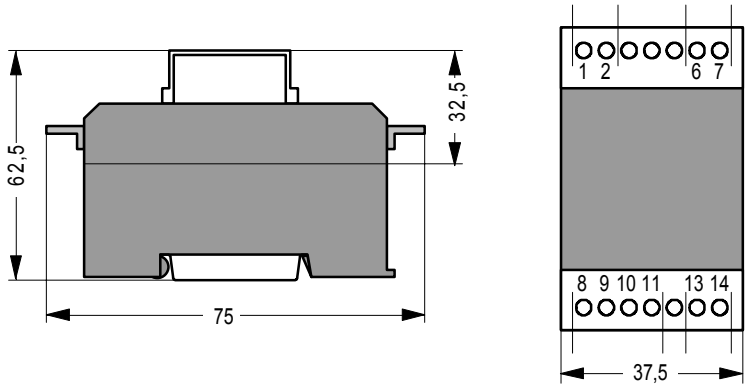

Bild 3 *Maßbild*

Fig. 3 *Dimension drawing*

Bisher sind folgende Ausgaben erschienen:
The following versions have been published so far:

Ausgabe Version	interne Sachnummer Internal item number
01.1995	477 435 4000 76 JA
AB	477 435 4000.76 J-AB 74
AC	A5E00388653

Ausgabe AC besteht aus folgenden Kapiteln:
Version AC consists of the following chapters:

Kapitel		Chapter	Seitenzahl Pages	Ausgabedatum Version date
1	Definitionen und Warnungen	Definitions and Warnings	5	01.2009
2	Produktbeschreibung	Product Description	1	01.1995
3	Montieren, Anschließen	Installation, Connecting-up	1	01.1995
4	Inbetriebsetzen	Start-up	2	05.1999
5	Technische Daten	Technical Data	2	05.1999

Änderungen von Funktionen, technischen Daten, Normen, Zeichnungen und Parametern vorbehalten.

We reserve the right to make changes to functions, technical data, standards, drawings and parameters.

Weitergabe sowie Vervielfältigung dieser Unterlage, Verwertung und Mitteilung ihres Inhalts nicht gestattet, soweit nicht ausdrücklich zugestanden. Zuwiderhandlungen verpflichten zu Schadenersatz. Alle Rechte vorbehalten, insbesondere für den Fall der Patenterteilung oder GM-Eintragung.

Wir haben den Inhalt der Druckschrift auf Übereinstimmung mit der beschriebenen Hard- und Software überprüft. Dennoch können Abweichungen nicht ausgeschlossen werden, so dass wir für die vollständige Übereinstimmung keine Garantie übernehmen. Die Angaben in dieser Druckschrift werden jedoch regelmäßig überprüft und notwendige Korrekturen sind in den nachfolgenden Auflagen enthalten. Für Verbesserungsvorschläge sind wir dankbar.

SIMOVERT® ist ein Warenzeichen von Siemens

The reproduction, transmission or use of this document or its contents is not permitted without express written authority. Offenders will be liable for damages. All rights, including rights created by patent grant or registration of a utility model or design, are reserved.

We have checked the contents of this document to ensure that they coincide with the described hardware and software. However, differences cannot be completely excluded, so that we do not accept any guarantee for complete conformance. However, the information in this document is regularly checked and necessary corrections will be included in subsequent editions. We are grateful for any recommendations for improvement.

SIMOVERT® Registered Trade Mark

Siemens AG
Industry Sector
Motion Control Systems
P.O. Box 3180, D – 91050 Erlangen
Germany

www.siemens.com/motioncontrol

© Siemens AG 2009
Subject to change without prior notice
Bestell-Nr./Order No.: 6SE7087-6CX84-3DF0

Printed in Germany

SIEMENS

SIMOVERT MASTERDRIVES

Betriebsanleitung
Operating Instructions

CBC - Kommunikationsbaugruppe CAN-Bus

CBC - Communication Board CAN-Bus

Ausgabe / Edition: AA

477 756 4070 76 J AA-74

Contents

0 Definitions and Warnings 0-1

1 Description 1-1

2 Technical Data 2-1

3 Installation 3-1

4 Connecting-up 4-1

5 Displays 5-1

6 Start-up 6-1

0 Definitions and Warnings

Qualified personnel

For the purpose of this documentation and the product warning labels, a "Qualified person" is someone who is familiar with the installation, mounting, start-up, operation and maintenance of the product. He or she must have the following qualifications:

- Trained or authorized to energize, de-energize, ground and tag circuits and equipment in accordance with established safety procedures .
- Trained or authorized in the proper care and use of protective equipment in accordance with established safety procedures.
- Trained in rendering first aid.



DANGER

For the purpose of this documentation and the product warning labels, "Danger" indicates death, severe personal injury or substantial property damage will result if proper precautions are not taken.



WARNING

For the purpose of this documentation and the product warning labels, "Warning" indicates death, severe personal injury or property damage can result if proper precautions are not taken .



CAUTION

For the purpose of this documentation and the product warning labels, "Caution" indicates that minor personal injury or material damage can result if proper precautions are not taken.

NOTE

For the purpose of this documentation, "Note" indicates important information about the product or about the respective part of the documentation which is essential to highlight.



WARNING

- Hazardous voltages are present in this electrical equipment during operation.
- Non-observance of the warnings can thus result in severe personal injury or property damage.
- Only qualified personnel should work on or around the equipment
- This personnel must be thoroughly familiar with all warning and maintenance procedures contained in this documentation.
- The successful and safe operation of this equipment is dependent on correct transport, proper storage and installation as well as careful operation and maintenance.



CAUTION

Components which can be destroyed by electrostatic discharge (ESD)

The board contains components which can be destroyed by electrostatic discharge. These components can be easily destroyed if not carefully handled. If you have to handle electronic boards, please observe the following:

- Electronic boards should only be touched when absolutely necessary .
- The human body must be electrically discharged before touching an electronic board.
- Boards must not come into contact with highly insulating materials - e.g. plastic parts, insulated desktops, articles of clothing manufactured from man-made fibers.
- Boards must only be placed on conductive surfaces .
- Boards and components should only be stored and transported in conductive packaging (e.g. metalized plastic boxes or metal containers).
- If the packing material is not conductive, the boards must be wrapped with a conductive packaging material, e.g. conductive foam rubber or household aluminium foil.

The necessary ESD protective measures are clearly shown in the following diagram:

- a = Conductive floor surface
- b = ESD table
- c = ESD shoes
- d = ESD overall
- e = ESD chain
- f = Cubicle ground connection

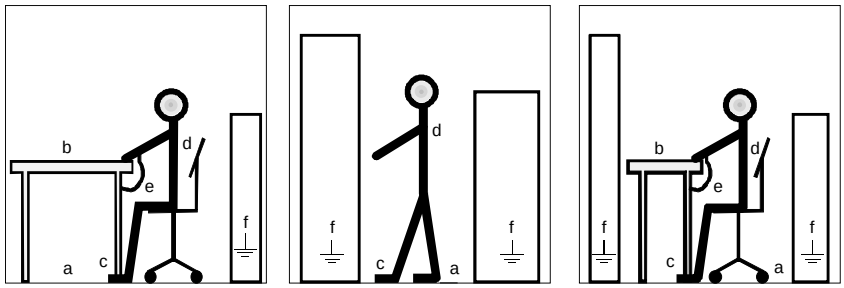

Fig. 0-1 ESD protective measures

1 Description

The CBC optional board (Communication Board CAN) is for linking drives to higher-level automation units or other field units via the CAN protocol (Controller Area Network).

The optional board has three LEDs (green, yellow, red) for providing information on the current operating status.

Voltage is supplied from the basic unit.

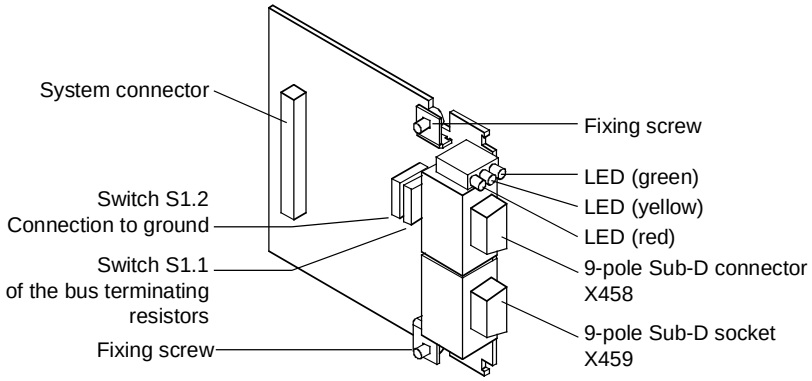

Fig. 1-1 View of the CBC optional board

2 Technical Data

Order number	6SE7090-0XX84-0FG0
Size (length x width)	90 mm x 83 mm
Pollution degree	Pollution degree 2 acc. to IEC 664-1 (DIN VDE 0110/T1), moisture condensation is not permissible in operation
Mechanical strength During stationary operation - Deflection - Acceleration During transport - Deflection - Acceleration	Acc. to DIN IEC 68-2-6 (for correctly installed board) 0.15 mm in frequency range 10 Hz to 58 Hz 19.6 m/s² in frequency range > 58 Hz to 500 Hz 3.5 mm in frequency range 5 Hz to 9 Hz 9.8 m/s² in frequency range > 9 Hz to 500 Hz
Climate class	Class 3K3 to DIN IEC 721-3-3 (in operation)
Type of cooling	Natural-air cooling
Permissible ambient or coolant temperature - during operation - during storage - during transport	 0° C to +70° C (32° F to 158° F) -25° C to +70° C (-13° F to 158° F) -25° C to +70° C (-13° F to 158° F)

Permissible humidity rating	Relative air humidity	≤ 95 % during transport and storage ≤ 85 % in operation (condensation not permissible)
Supply voltage	5 V ± 5 %, max. 500 mA, internally from basic unit	

Table 2-1 Technical data

3 Installation

If the inverters/converters are ordered with optional functions, the optional boards are already installed in the units when they are delivered.

It is possible to retrofit optional boards and this can be carried out by the user.

For this purpose, there are either three or up to six slots on the basic unit depending on the type of construction for mounting the optional boards.

An exact description of installation is included with the relevant basic unit. As the unit has to be removed and opened in order to install optional boards, attention must be paid to the ESD measures. Please refer to the operating instructions of the basic unit in this regard.

NOTE

Generally, you can install the CBC optional board (communication board CAN) in every slot. However, bear in mind that a sensor board always requires slot C.

One CBC can be installed per unit.

4 Connecting-up

The CBC optional board has a 9-pole Sub-D connector (X458) and a 9-pole Sub-D socket (X459) which are provided for connecting it up to the CAN bus. The two connections have identical assignment and are through-connected internally; they are short-circuit-proof and floating.

X458, X459

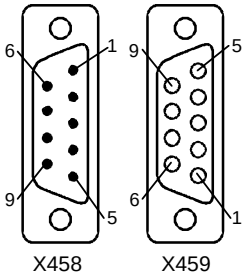

Pin	Designation	Significance
1	-	Not connected
2	CAN_L	CAN_L bus line
3	CAN_GND	CAN ground (M5)
4	-	Not connected
5		Not connected
6	CAN_GND	CAN ground (M5)
7	CAN_H	CAN_H bus line
8	-	not connected
9	-	not connected

Table 4-1 Connections X458 (socket) and X459 (pins)

NOTE

- The bus cable must be terminated at both ends with bus terminating resistors to ensure trouble-free CAN bus operation. In this case, the bus cable has to be regarded as being one bus cable from the first CAN bus node up to the last CAN bus node, to enable the CAN bus to be terminated twice.
- Switch S1.1 of the bus terminating resistors is located on the optional board behind connector X458.

NOTE

- If the CAN bus interface of the master is operated ungrounded, you can close switch S1.2 on one node in order to obtain a bus connection to ground.
- The switch for connecting to ground is located on the optional board behind connector X458.

5 Displays

There are three LED displays on the front of the CBC optional board which supply information on the current operating status. The following LEDs are provided:

- CBC operating (red)
- Data exchange with basic unit (yellow)
- Telegram traffic via CAN (green)

Operating display

LED	Status	Diagnostic information
Red	Flashing	CBC operating; voltage supply on
Yellow	Flashing	Fault-free data exchange with the basic unit
Green	Flashing	Fault-free process data transfer via the CAN bus

Table 5-1 CBC operating display

Fault displays

LED	Status	Diagnostic information
Red	Flashing	Cause of fault:
Yellow	Continuous	Serious fault on CBC
Green	Continuous	Remedy: replace CBC

Table 5-2 Fault display of faults on the CBC

LED	Status	Diagnostic information
Red	Flashing	CBC is waiting for the
Yellow	Off	converter/inverter to start
Green	Continuous	parameterization

Table 5-3 Fault display during parameterization

LED	Status	Diagnostic information
Red	Flashing	CBC is waiting for the
Yellow	Continuous	converter/inverter to
Green	Off	finish parameterization

Table 5-4 Fault display during parameterization

LED	Status	Diagnostic information
Red	Flashing	No net data transfer via the CAN bus
Yellow	Flashing	e.g. bus connector withdrawn, EMC fault,
Green	Off	connections with incorrect polarity, node is not being supplied with net data via the CAN bus.

Table 5-5 Fault display during operation

NOTE

- During normal operation, all three LEDs repeatedly light up at the same time and for the same length of time (flashing!)
- If an LED is continuously on or off, this indicates an exceptional condition (parameterization phase or fault)!

6 Start-up

After installation of the CBC optional board has been completed, an automatic self-test will be carried out when the basic unit (converter/inverter) is powered-up.

Afterwards, the new board may have to be logged in on the basic unit and provided with a bus address. Please refer to the documentation on the basic unit for further details in this respect.

Please refer to the Compendium for detailed start-up instructions with complete parameterization.

Bisher sind folgende Ausgaben erschienen:
The following editions have been published so far:

Ausgabe Edition	Interne Sachnummer Internal Item Number
AA	477 756 4070 76 J AA-74

Ausgabe AA besteht aus folgenden Kapiteln:
Version AA consists of the following chapters:

	Kapitel	Chapter	Seitenzahl Pages	Ausgabedatum Version date
0	Definitionen und Warnungen	Definitions and warnings	4	11.97
1	Beschreibung	Description	1	11.97
2	Technische Daten	Technical Data	2	11.97
3	Montage	Installation	1	11.97
4	Anschließen	Connecting-up	2	11.97
5	Anzeigen	Displays	3	11.97
6	Inbetriebsetzung	Start-up	1	11.97

Automation und Drives
Drehzahlveränderbare Antriebe
Postfach 3269, D-91050 Erlangen

Siemens Aktiengesellschaft

Änderungen vorbehalten

Printed in the federal Republic of Germany
11.97

SIEMENS

SIMOVERT Master Drives
Communication Board CBD

Operating Instructions

June 29, 2000

Operating Instructions Release Date	Description
January 14, 1998	First edition
June 29, 2000	(1) Added CUVC, CUMC and DC Master parameter numbers to existing CU2 parameter numbers by placing tables showing equivalent parameter numbers. (2) Added description of Page Select bit in IND word (see 4.2.1.4 and 4.2.1.5). (3) Added PLC scanner note on Strobe I/O (see 5.3.1). (4) Added description of software version 1.4 change (see 7.2.1). (5) Corrected typographical errors.

Summary of Equivalent Parameter Numbers			
	CUVC & CUMC	DC-Master	CU2
“CB parameter 1”	P711.x	U711.x	P696
“CB parameter 2”	P712.x	U712.x	P697
“CB parameter 10”	P720.x	U720.x	P705
“CB/TB actual values”	P734.01 to P734.16	U734.01 to U734.16	P694.01 to P694.16
“CB/TB diagnostics”	r732.x	n732.x	P731.x
“CB/TB TLg OFF Time”	P722.x	U722.x	P695
“parameterizing enable”	P053	P927	P053

Table of Contents

0 Definitions 1

1 Product description 5

2 Mounting instructions 7

3 Connecting-up 9

3.1 Connecting-up the bus cable 9
3.1.1 5-pin Open Connector X438 9

3.2 EMC measures 11
3.2.1 Potential bonding 11
3.2.2 Routing cables 11

3.3 Bus termination 12

3.4 Ground connection 12

3.5 DeviceNet Power Supply and Power Tap 12

3.6 CBD Power Requirements 12

3.7 Interface X438 13

4 Data transfer via DeviceNet 15

4.1 General Information 15

4.2 Parameter area (PKW) 16
4.2.1 Use of PKW object 16
4.2.1.1 DeviceNet GET SINGLE 16
4.2.1.2 DeviceNet SET SINGLE 17
4.2.1.3 DeviceNet response 17
4.2.1.4 Parameter ID (PKE) 20
4.2.1.5 Parameter index (IND) 26
4.2.1.6 Parameter value (PWE) 28
4.2.1.7 Rules for PKW object processing 30

4.3 Process data area (PZD) 31
4.3.1 Setting the number of PZD words 31
4.3.2 Setting the meaning of the PZD words 33
4.3.3 Instructions and rules regarding process data processing 35

Table of Contents

5 Start-up 36

5.1 Parameterization 36

5.2 Process data combination 40
5.2.1 Setpoint channel (master to drive) 41
5.2.2 Actual value channel (drive to master) 44
5.2.3 Other CBD-relevant parameters 46

5.3 Information for the DeviceNet master 48
5.3.1 Creating EDS Stub File for CBD 48
5.3.2 Using Explicit Messaging with a PLC Scanner 49

6 Troubleshooting 55

6.1 CBD Alarms and faults 55
6.1.1 Alarms 55
6.1.2 Fault messages 57

6.2 Diagnostics 59
6.2.1 Diagnostic LED's 59
6.2.2 CBD diagnostic parameters 61
6.2.2.1 DeviceNet Status - parameter "CB/TB diagnostics" index 02 63

7 Appendix 65

7.1 Technical data 65
7.2 Revision data 65

0 Definitions

- QUALIFIED PERSONNEL

  For the purpose of this Instruction Manual and product labels, a “Qualified person” is someone who is familiar with the installation, mounting, start-up and operation of the equipment and the hazards involved. He or she must have the following qualifications:

  1. Trained and authorized to energize, de-energize, clear, ground and tag circuits and equipment in accordance with established safety procedures.
  2. Trained in the proper care and use of protective equipment in accordance with established safety procedures.
  3. Trained in rendering first aid.

- DANGER

  For the purpose of this Instruction Manual and product labels, “Danger” indicates death, severe personal injury and/or substantial property damage will result if proper precautions are not taken.

- WARNING

  For the purpose of this Instruction Manual and product labels, “Warning” indicates death, severe personal injury or property damage can result if proper precautions are not taken.

- CAUTION

  For the purpose of this Instruction Manual and product labels, ”Caution” indicates that minor personal injury or material damage can result if proper precautions are not taken.

- NOTE

  For the purpose of this Instruction Manual, “Note” indicates information about the product or the respective part of the Instruction Manual which is essential to highlight.

NOTE
The information in this Manual does not purport to cover all details or variations in equipment, nor to provide for every possible contingency to be met in connection with installation, operation or maintenance. Should further information be desired or should particular problems arise which are not covered sufficiently for the purchaser’s purposes, please contact your local Siemens office. Further, the contents of this Manual shall not become a part of nor modify any prior or existing agreement, committment or relationship. The sales contract contains the entire obligation of Siemens. The warranty contained in the contract between the parties is the sole warranty of Siemens. Any statements contained herein do not create new warranties nor modify the existing warranty.



CAUTION

Electrostatically sensitive devices (ESD)

Electronic modules contain electrostatically sensitive devices that can easily be destroyed if they are improperly handled. However, if your work does involve the handling of such devices, please observe the following information:

- Electronic modules should not be touched unless work has to be carried out on them.
- If it is essential for you to touch an electronic module, make sure that your body is electrostatically discharged beforehand.
- Modules must not be allowed to come into contact with electrically insulating materials such as plastic foil, insulating table tops or clothing made of synthetic fibres.
- Modules may only be set down or stored on electrically conducting surfaces.
- The soldering tip of soldering devices must be earthed before they are used on modules.
- Modules and electronic components should generally be packed in electrically conducting containers (such as metallized plastic boxes or metal canisters) before being stored or shipped.
- If the use of non-conducting packing containers cannot be avoided, modules must be wrapped in a conducting material before being put into such containers. Examples of such materials include electrically conducting foam rubber or household aluminium foil.

For easy reference, the protective measures necessary when dealing with electrostatic sensitive devices are illustrated in the sketches below:

a	=	Conductive flooring	d	=	Anti-static overall
b	=	Anti-static table	e	=	Anti-static chain
c	=	Anti-static footwear	f	=	Earthing connections of cabinets

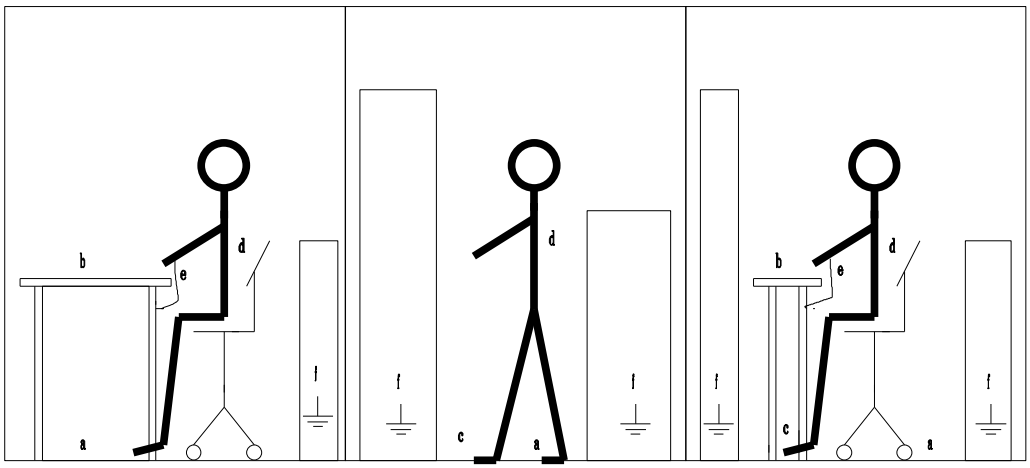

Seated **Standing** **Standing / sitting**

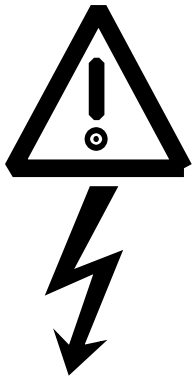

WARNING

Electrical equipment has components which are at dangerous voltage levels.

If these instructions are not strictly adhered to, this can result in severe bodily injury and material damage.

Only appropriately qualified personnel may work on this equipment or in its vicinity.

This personnel must be completely knowledgeable about all the warnings and service measures according to this User Manual.

The successful and safe operation of this equipment is dependent on proper handling, installation, operation and maintenance.

Notes

1 Product description

Board **CBD**

The documentation (English language only) is always included with the board. It is not possible to order the documentation separately.
The communication board can either be ordered as a spare part or as a package with a mounting kit. The mounting kit consists of the communication board CBD, manual, connector and mounting components.

The mounting kit part number is 6SX7010-0FK00. This includes the board, DeviceNet plug, and instruction book.

The communication board only is has part number 6SE7090-0XX84-0FK0. This is **only** the board.

The **CBD** [1] communications board is the DeviceNet™ interface for the complete MASTER DRIVES series.

- SIMOVERT FC (Frequency Control)
- SIMOVERT VC (Vector Control)
- SIMOVERT SC (Servo Control)
- SIMOVERT MC (Motion Control)

The CBD communications board permits MASTER DRIVES to be coupled to higher-level automation units or other field devices via the DeviceNet™ protocol.

The CBD communications board can be simply inserted in the drive electronics box, and operates with all of the software- and hardware versions of MASTER DRIVES. For some drives, a 6SE7090-0XX84-0KA0 adapter board and a LBA board are also required.

The CBD supports both DeviceNet™ Explicit Messages and I/O Messages to implement the equivalent of the process data and parameter data portions of drive communications.

For DeviceNet™ , Explicit Message Connections provide generic, multi-purpose communication paths between two devices. They provide the means by which typical request/response oriented functions are performed (for example module configuration).

By contrast, DeviceNet™ IO Message Connections provide special-purpose communication paths between a transmitting device and one or more receiving devices. Application-specific I/O data moves across an I/O Connection. The meaning of the data within an I/O Message is implied by the associated Connection ID.

The CBD supports the Predefined Master/Slave Connection Set as defined in the DeviceNet™ specification. Both poll and bit strobe I/O messages are supported.

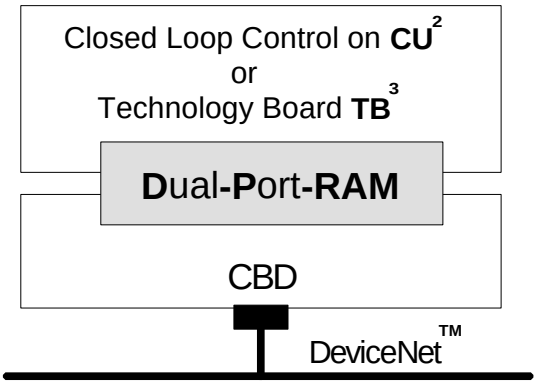

*Figure. 1.1 Coupling **CBD** to the drive via the dual port RAM interface*

The CBD follows the DeviceNet™ Device Profile for the Communication Adapter (Device Type 12). The Communication Adapter Profile was chosen so that all the flexibility and advanced features of the Master Drive could be used by the DeviceNet™ master. For this same reason, the CBD did not implement the DeviceNet™ AC Drives profile.

---

[1] CB = Communication Board, e. g. **CBD**
[2] CU = Control Unit, e. g. CU1, CU2, CU3, CUVC, CUMC, DC Master
[3] TB = Technology Board, e. g. T300, T100

DeviceNet is a trademark of Open DeviceNet Vendor Association (O.D.V.A.)

The CBD DeviceNet™ messages can be roughly sub-divided into three areas:

- DeviceNet™ Configuration data, i. e. channel allocation, time-outs, and I/O assembly selections which use Explicit Messages, and
- Process data, i. e. control words, setpoints/reference values and status information and actual values which use I/O Messages, and
- Drive parameter data to read/write drive parameter values which use the vendor specific PKW object and Explicit Messages.

The drive is controlled using the process data, for example power-on/power-off and setpoint input. The number of process data words (4, 8, or 16) is selected at power-up by dedicated CB parameters or dynamically through DeviceNet™. The use of each process data word is set at the drive and is dependent on the actual function of each particular drive. The process data is processed with highest priority and in the shortest time segments.

The vendor specific PKW object is used to read and change drive parameters by the master using DeviceNet™. The explicit messaging channel is used. Using this PKW object, the user has free access to all parameters in the base drive (CU) and an optional technology board (TB) via DeviceNet™. Examples include: Reading-out detailed diagnostic information, fault messages etc. Thus, without influencing the performance of the process data transfer, additional information can be requested by a higher-level system (for example a PC) for drive visualization.

Open-loop control and operator control of Master Drives via DeviceNet ä

In the process data area (refer to Figure 1.1), all of the information is transferred that is required to control a drive within a particular technological process. Control information (control words) and setpoints are sent to the drive from the DeviceNet™ master. Information regarding the drive status (status words) and actual values are transferred in the other direction.

The CBD communications board stores the received process data in the dual port RAM in the same sequence as it is transmitted in the telegram. Each word in the dual port RAM is assigned an address. The contents of the dual port RAM in the drive (CU + if required TB) can be freely connected via parameters, for example the second word in the process data area of the telegram can be connected to be used as the as speed setpoint to the ramp-function generator. The same mechanism is also true for other setpoints and for each individual control word bit. This mechanism is also true for data traffic in the opposite direction when transferring actual values and status words to the master.

Diagnostic LED’s provide the user with fast information regarding the instantaneous status of the CBD. More detailed diagnostic information can be directly read-out of the **CBD** diagnostics memory using a diagnostics parameter.

2 Mounting instructions

If a 6SE7090-0XX84-0KA0 adapter board is required, the backplane bus adapter (local bus adapter LBA, Order No.: 6SE7090-0XX84-4HA0) must first be installed before the board is used. Otherwise the CBD is inserted directly on the CU board.

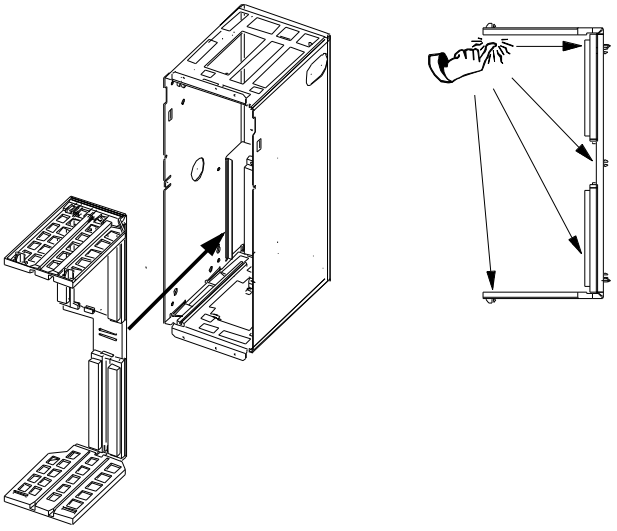

Fig. 2.1 Installing the local bus adapter

Installing the LBA bus expansion:

- Remove the CU board (lefthand slot in the electronics box) using the handles after first removing the connecting cable to the PMU and both retaining screws
- Insert the LBA bus expansion in the electronics box (position, refer to the diagram) so that it snaps into place
- Re-insert the CU into the lefthand slot, tighten-up the retaining screws on the handles, and insert the connecting cable to the PMU
- **For CU1, CU2, CU3:** Insert CBD on the lower position of the adapter board and screw into place. Insert the adapter board into slot 2 (righthand side) or slot 3 (center) of the electronics box, and screw into place. Only one of each option board type may be inserted in the electronics box. If only one option board is inserted, then it must always be inserted at slot 2 (right).
- **For CUVC, CUMC, DC Master:** Insert CBD on either the upper or lower position of the adapter board and screw into place. Insert the adapter board into slot 2 (righthand side) or slot 3 (center) of the electronics box, and screw into place. Check the drive instruction book to determine how many option boards of each type may be inserted in the electronics box. If only one option board is inserted, then it must always be inserted at slot 2 (right).

The adapter board with the CBD attached can either be inserted at slot +1.B2 or +1.B3. Please refer to Fig. 2.2 for the slot designations. Please note, that slot +1.B3 is the center slot in the electronics box!

Electronics box slot		**Boards**
+1.B1 (left)	Standard board	CU
+1.B3 (center)	Option boards	CBD / SCB1 / SCB2 / TSY
+1.B2 (right)		CBD / SCB1 / SCB2 / TSY / TB (e. g. T100 or T300)

NOTE
TB (technology boards, e. g. T300), must **always** be inserted in slot +1.B2 (**RIGHT** in the electronics box)! When a TB board is inserted, a TSY option board cannot be used. If only **one** option board is used, then this must **always** be inserted in slot +1.B2 (**RIGHT** in the electronics box)!

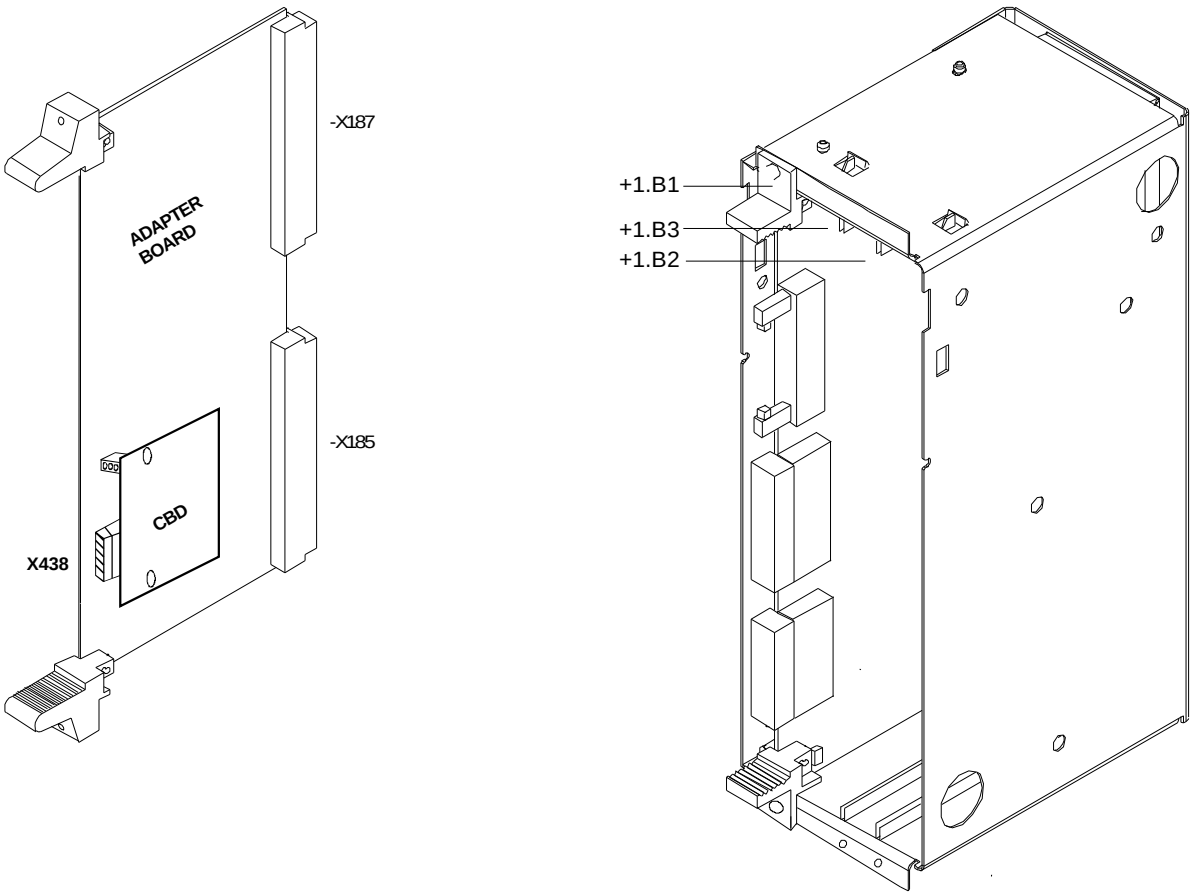

Fig. 2.2 CBD on adapter board with bus connector and electronics box with free slots +1.B2 and +1.B3

NOTE
When installing the CU control electronics board (slot +1.B1) and the option board(s), ensure that the handles are screwed flush with the surface of the electronics box (so that the board isn't tilted)!

3 Connecting-up

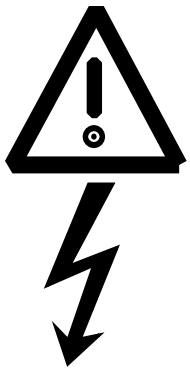

WARNING

SIMOVERT MASTER DRIVES operate at high voltages.

Only qualified, trained personnel are permitted to work on the unit.

Death, severe bodily injury or significant material damage could result if this is not observed.

Hazardous voltages are still present in the drive up to 5 minutes after it has been disconnected from the supply due to the DC link capacitors. Thus, before opening the drive, wait until the capacitors have been completely discharged.

The power- and control terminals are at hazardous voltage levels even when the motor is stationary.

The converter must always be disconnected and locked-out before work is started.

If it is absolutely necessary to work with a converter opened, it should be noted that you could come into contact with components and parts at hazardous voltage levels (shock hazard!).



CAUTION

CBD contains components which can be destroyed by electrostatic discharge. These components can be easily destroyed if incorrectly handled.

Also refer to the ESD cautionary measures in the introduction section, General information

3.1 Connecting-up the bus cable

3.1.1 5-pin Open Connector X438

Terminal	Function	DeviceNet ä Wire Color
X438.1	V-	Black power supply common
X438.2	CAN-	Blue
X438.3	Shield	
X438.4	CAN+	White
X438.5	V+	Red power supply +24 VDC ±1%

Table 3.1 Assignment of open connector X438

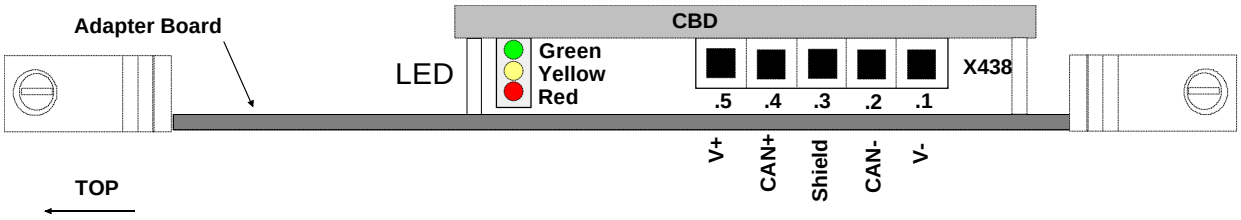

*Fig. 3.1 Front view of **CBD** with diagnostic LEDs, terminal strip X438 and bus connenctor*

The bus connector for terminal strip X438 is supplied loose. These loose components can also be individually ordered from Phoenix Contact or Messrs. Phoenix Contact GmbH & Co (bus connector):

Order designation:

Phoenix number: Combicon MSTB 2.5/5-ST-5.08-AU (cable side-sockets)

Cable meeting DeviceNet™ specifications must be used.

Thin cable: Belden 3084A
Thick cable: Belden 3082A or 3083A or 3085A

Relation of DeviceNet Data Rate and Cable Distances:

Data Rate	Trunk Distance (thick Cable)	Drop Length	
		Maximum drop	Cumulative
125K	500m (1640 ft)	6m (20 ft)	156m (512 ft)
250K	250m (820 ft)	6m (20 ft)	78m (256 ft)
500K	100m (328 ft)	6m (20 ft)	39m (128 ft)

NOTE: Thin cable may be used as trunk. Maximum distance is 100 meters (328 feet) for any baud rate.

3.2 EMC measures

DeviceNet™ specifications must be followed if the DeviceNet™ bus is to operate fault-free:

3.2.1 Potential bonding

Prevent potential differences (e. g. as a result of using different power supplies), between the converters and the bus master:

- Use potential bonding cables:
  - 16 mm^2 Cu for potential bonding cables up to 200 m
  - 25 mm^2 Cu for potential bonding cables over 200 m
  - Route the potential bonding cables so that there is the smallest possible surface area between the potential bonding cable and signal cables.
- Connect potential bonding cables to the ground/protective conductor through the largest possible surface area.

3.2.2 Routing cables

Please observe the following instructions when routing cables:

- Do not route bus cables (signal cables), directly in parallel with power cables.
- Signal cables and associated potential bonding cables must have the lowest possible clearance between them and be as short as possible.
- Power cables and signal cables should be routed in separate cable ducts.
- Shields should be connected through a large surface area.

3.3 Bus termination

To guarantee fault-free operation of the DeviceNet™ bus, the bus cable must be terminated using bus terminating resistors at both ends of the trunk as described in the DeviceNet™ specifications.

The resistor requirements are:

- 121 ohm
- 1% Metal Film
- ¼ Watt

3.4 Ground connection

Grounding of the DeviceNet™ bus is described in the DeviceNet™ specification. The specification follows:

“DeviceNet should be grounded at ONE location. Grounding at more then one location may produce ground loops, while not grounding the network will increase sensitivity to ESD and outside noise sources. The single grounding location should be at a power tap. Sealed DeviceNet power taps are designed to accommodate grounding. Grounding near the physical center of the network is also desired.”

“The trunk drain/shield should be attached to the power supply ground or V- with a copper conductor that is either solid, stranded, or braided. Use a 1” copper braid or a #8 AWG wire that is less than 3 meters/10 feet in length. This should then be attached to a good earth or building ground (such as an 8 foot stake driven into the ground, attached to building iron or to the cold water plumbing).”

“If the network is already grounded, do NOT connect the grounding terminal of the tap or ground of the supply to earth. If more than one supply is on the network, then connect the drain wire/shield at ONE supply only, preferably near the physical center of the network.”

3.5 DeviceNet Power Supply and Power Tap

Powering of the DeviceNet™ bus is described in the DeviceNet™ specification. A DeviceNet power tap should be used to protect the network, The general power supply specification follows:

- +24 VDC
- Ability to support linear and switching regulators
- Tolerance of: +24 VDC +/- 1% and current capability of 0-16 amps (single and multiple supply applications)
- Supply outputs must be isolated from the AC line and chassis

3.6 CBD Power Requirements

Each CBD draws a maximum of 35 ma worst case (at 11 VDC) from the DeviceNet power supply.

The CBD is technically called an “isolated node with transceiver powered by the network”. The transceiver and half of the optocouplers are powered by the DeviceNet network. But the rest of the node is powered by the AC line.

3.7 Interface X438

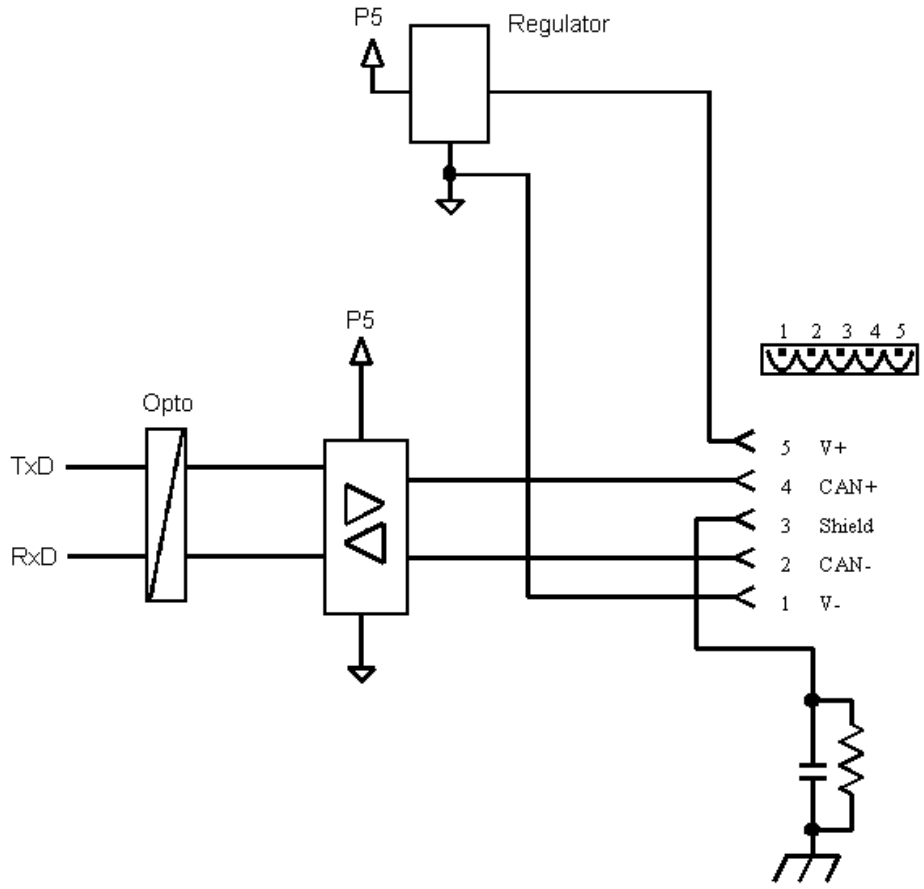

Fig. 3.2 Approximate bus interface circuit

Notes

4 Data transfer via DeviceNet

4.1 General Information

When transferring useful data, a differentiation is made between parameter data (PKW) and process data (PZD). (also refer to Section 1 “Product description”).

The actual CAN data telegram consists of the protocol header, the CAN identifier, up to 8 bytes of useful data and the protocol trailer. However, the methods used by DeviceNet™ allow a useful data area to be any reasonable length. If data longer than 8 bytes is required, a fragmentation protocol allows the data to be sent as series of telegrams.

Normally PKW data is not used – since drive commissioning is performed by SIMOVIS or other means.

Using the vendor specific PKW object (which will be described later), the PKW useful data area consists of:

(1) 2 words or 4 bytes for parameter value read tasks (called a “Get” DeviceNet™ service) and

(2) 4 words or 8 bytes for parameter value change tasks (called a “Set” DeviceNet™ service) and

(3) 3 words or 6 bytes for parameter value responses.

Separate from the parameter data, the process data area for MASTER DRIVES consists of 16 words. Normally only process data is used to communicate to the drive by sending and receiving PZD data. This process data is normally sent by ″polled I/O″.

The CBD groups these 16 words into 3 choices:

(1) the first 4 PZD words

(2) the first 8 PZD words

(3) all 16 PZD words

4.2 Parameter area (PKW)

PKW data is normally not used – since drive commissioning is performed by SIMOVIS or other means. If PKW data is not used, this section can be skipped.

You can process the following tasks using the PKW mechanism:

- reading drive parameters
- writing drive parameters
- reading the parameter description (parameter type, max./min. value etc.)

4.2.1 Use of PKW object

The vendor specific PKW object, class 100 (64 hex), is used to read and change 6SE70 drive parameters and technology board (if supplied) parameters by the DeviceNet™ Master. The explicit messaging mode is used.

In this object, only 2 instances are implemented. Instance number 0 accesses the class attribute. Instance number 1 accesses all drive and technology board parameter numbers. For instance 1, the attribute number must presently always be 1. The first and second bytes of DeviceNet™ data are interpreted as a 16 bit word and contain the Parameter ID (PKE) which is defined later in section 4.2.1.4. The third byte of DeviceNet™ data (1 to 255) maps directly to the low byte of the Parameter index (IND) which is defined later in section 4.2.1.5. The fourth byte of DeviceNet™ data is interpreted as the high byte of the Parameter index (IND) and is presently always set to 0. For the set service, the fifth and sixth bytes of DeviceNet™ data are interpreted as a 16 bit word and contain the low word of the parameter value (PWE1) and the seventh and eighth bytes of DeviceNet™ data are interpreted as a 16 bit word and contain the high word of the parameter value (PWE2) which are defined later in section 4.2.1.6.

A GET SINGLE service code is required for task ID's of 1, 4, 6, and 9. Task ID's are defined in section 4.2.1.4.
A SET SINGLE service code is required for task ID's of 2, 3, 7, 8, 11, 12, 13, and 14.
A not supported response is sent for task ID's of 0, 5, 10, and 15.

4.2.1.1 DeviceNet GET SINGLE

This section contains technical DeviceNet™ details required if a generic DeviceNet™ master is used for explicit messages. If a PLC scanner will be used, this section and the following two sections (4.2.1.2 and 4.2.1.3) can be skipped and the section Using Explicit Messaging with a PLC Scanner (section 5.3.2) should be referenced instead.

A GET SINGLE is sent as a fragmented explicit message. It uses 9 bytes.

Byte No.	[DeviceNet™ Designation]		
Byte 1	[FRAG] [XID] [SRC/DST MAC Id]		
Byte 2	[[R/R] [Service]]	0x0E	[Get_Attribute_Single]
Byte 3	[Class]	100	[PKW Object] [Vendor specific]
Byte 4	[Instance]	1	[Instance Number] [always 1]
Byte 5	[Attribute]	1	[Attribute Number] [always 1]
Byte 6	[Data]		[Low byte Parameter ID (PKE)]
Byte 7	[Data]		[High byte Parameter ID (PKE)]
Byte 8	[Data]		[Low byte Parameter index (IND)] [range 0 to 255]
Byte 9	[Data]		[High byte Parameter index (IND)] [for future use]

4.2.1.2 DeviceNet SET SINGLE

This section also contains technical DeviceNet™ details required if a generic DeviceNet™ master is used for explicit messages. If a PLC scanner will be used, this section and the following section (4.2.1.3) can be skipped and the section Using Explicit Messaging with a PLC Scanner (section 5.3.2) should be referenced instead.

A SET SINGLE is sent as a fragmented explicit message. It uses 14 bytes.

Byte No.	[DeviceNet™ Designation]		
Byte 1	[FRAG] [XID] [SRC/DST MAC Id]		
Byte 2	[Fragmentation Protocol]		
Byte 3	[[R/R] [Service]]	0x10	[Set_Attribute_Single]
Byte 4	[Class]	100	[PKW Object] [Vendor specific]
Byte 5	[Instance]	1	[Instance Number] [always 1]
Byte 6	[Attribute]	1	[Attribute Number] [always 1]
Byte 7	[Data]		[Low byte Parameter ID (PKE)]
Byte 8	[Data]		[High byte Parameter ID (PKE)]
Byte 9	[Data]		[Low byte Parameter index (IND)] [range 0 to 255]
Byte 10	[Data]		[High byte Parameter index (IND)] [for future use]
Byte 11	[Data]		[Low byte, low word parameter value (PWE1)]
Byte 12	[Data]		[High byte, low word parameter value (PWE1)]
Byte 13	[Data]		[Low byte, high word parameter value (PWE2)]
Byte 14	[Data]		[High byte, high word parameter value (PWE2)]

4.2.1.3 DeviceNet response

This section also contains technical DeviceNet™ details required if a generic DeviceNet™ master is used for explicit messages. If a PLC scanner will be used, this section can be skipped and the section Using Explicit Messaging with a PLC Scanner (section 5.3.2) should be referenced instead.

The response is always be sent as a non-fragmented explicit message. It uses 8 bytes.

Byte No.	[DeviceNet™ Designation]		
Byte 1	[FRAG] [XID] [SRC/DST MAC Id]		
Byte 2	[[R/R] [Service]]	0x8E or 0x90	[Get/Set_Attribute_Single]
Byte 3	[Service Data]		[Low byte Parameter ID (PKE)]
Byte 4	[Service Data]		[High byte Parameter ID (PKE)]
Byte 5	[Service Data]		[Low byte, low word parameter value (PWE1)]
Byte 6	[Service Data]		[High byte, low word parameter value (PWE1)]
Byte 7	[Service Data]		[Low byte, high word parameter value (PWE2)]
Byte 8	[Service Data]		[High byte, high word parameter value (PWE2)]

Example 1: Read value of parameter P101.4

To read parameter P101.4, we would use a Get_Attribute_Single service code with class #100, instance #1, and attribute #1. The first 2 data bytes make up a data word of 6065 hex [task Parameter ID (PKE)]. The third and fourth data bytes make up a data word of 4 [Parameter index (IND)]. For more details, refer to example 1 in the Parameter ID (PKE) section 4.2.1.4 and in the Parameter index (IND) section 4.2.1.5 later.

The GET SINGLE that would be sent by the master:

Byte No.	[DeviceNet™ Designation]		
Byte 1	[FRAG] [XID] [SRC/DST MAC Id]		
Byte 2	[[R/R] [Service]]	0x0E	[Get_Attribute_Single]
Byte 3	[Class]	100	[PKW Object] [Vendor specific]
Byte 4	[Instance]	1	[Instance Number] [always 1]
Byte 5	[Attribute]	1	[Attribute Number] [always 1]
Byte 6	[Data]	0x65	[Low byte Parameter ID (PKE)]
Byte 7	[Data]	0x60	[High byte Parameter ID (PKE)]
Byte 8	[Data]	4	[Low byte Parameter index (IND)] [range 0 to 255]
Byte 9	[Data]	0	[High byte Parameter index (IND)] [for future use]

The response that would be sent by the drive:

Byte No.	[DeviceNet™ Designation]		
Byte 1	[FRAG] [XID] [SRC/DST MAC Id]		
Byte 2	[[R/R] [Service]]	0x8E	[Get_Attribute_Single]
Byte 3	[Service Data]	0x65	[Low byte Parameter ID (PKE)]
Byte 4	[Service Data]	0x40	[High byte Parameter ID (PKE)]
Byte 5	[Service Data]	0xA0	[Low byte, low word parameter value (PWE1)]
Byte 6	[Service Data]	0x0F	[High byte, low word parameter value (PWE1)]
Byte 7	[Service Data]	0x00	[Low byte, high word parameter value (PWE2)]
Byte 8	[Service Data]	0x00	[High byte, high word parameter value (PWE2)]

Bytes 1 and 2 are part of the DeviceNet™ protocol.
The response from the drive starts with byte 3 which contains a value of 65 hex, followed by a data byte of 40 hex. These 2 data bytes make up a data word of 4065 hex [response Parameter ID (PKE)]. For more details, refer to example 1 in the Parameter ID (PKE) section 4.2.1.4 later.
Next is a data byte of A0 hex, followed by a data byte of 0F hex. These 2 data bytes make up a data word of 0FA0 hex [low word parameter value (PWE1)]. Next is a data byte of 00 hex, followed by a data byte of 00 hex. These 2 data bytes make up a data word of 0000 hex [high word parameter value (PWE2)]. Thus, parameter P101.4 has a value of 0FA0 hex. For more details, refer to example 1 in the Parameter value (PWE) section 4.2.1.6 later.

Example 2: Set value of parameter P554.1 = 3001 hex

To set parameter P554.1 = 3001 hex, we would use a Set_Attribute_Single service code with class #100, instance #1, and attribute #1. The first 2 data bytes make up a data word of C22A hex [task Parameter ID (PKE)]. The third and fourth data bytes make up a data word of 1 [Parameter index (IND)]. Next are two data bytes that make up a data word of 3001 hex [low word parameter value (PWE1)]. Next are 2 more data bytes that make up a data word of 0000 hex [high word parameter value (PWE2)]. For more details, refer to example 2 in the Parameter ID (PKE) section 4.2.1.4, in the Parameter index (IND) section 4.2.1.5 later, and in the Parameter value (PWE) section 4.2.1.6 later.

The SET SINGLE that would be sent by the master:

Byte No.	[DeviceNet™ Designation]		
Byte 1	[FRAG] [XID] [SRC/DST MAC Id]		
Byte 2	[Fragmentation Protocol]		
Byte 3	[[R/R] [Service]]	0x10	[Set_Attribute_Single]
Byte 4	[Class]	100	[PKW Object] [Vendor specific]
Byte 5	[Instance]	1	[Instance Number] [always 1]
Byte 6	[Attribute]	1	[Attribute Number] [always 1]
Byte 7	[Data]	0x2A	[Low byte Parameter ID (PKE)]
Byte 8	[Data]	0xC2	[High byte Parameter ID (PKE)]
Byte 9	[Data]	1	[Low byte Parameter index (IND)] [range 0 to 255]
Byte 10	[Data]	0	[High byte Parameter index (IND)] [for future use]
Byte 11	[Data]	0x01	[Low byte, low word parameter value (PWE1)]
Byte 12	[Data]	0x30	[High byte, low word parameter value (PWE1)]
Byte 13	[Data]	0x00	[Low byte, high word parameter value (PWE2)]
Byte 14	[Data]	0x00	[High byte, high word parameter value (PWE2)]

The response that would be sent by the drive:

Byte No.	[DeviceNet™ Designation]		
Byte 1	[FRAG] [XID] [SRC/DST MAC Id]		
Byte 2	[[R/R] [Service]]	0x90	[Set_Attribute_Single]
Byte 3	[Service Data]	0x2A	[Low byte Parameter ID (PKE)]
Byte 4	[Service Data]	0x42	[High byte Parameter ID (PKE)]
Byte 5	[Service Data]	0x01	[Low byte, low word parameter value (PWE1)]
Byte 6	[Service Data]	0x30	[High byte, low word parameter value (PWE1)]
Byte 7	[Service Data]	0x00	[Low byte, high word parameter value (PWE2)]
Byte 8	[Service Data]	0x00	[High byte, high word parameter value (PWE2)]

Bytes 1 and 2 are part of the DeviceNet™ protocol.
The response from the drive starts with byte 3 which contains a value of 2A hex, followed by a data byte of 42 hex. These 2 data bytes make up a data word of 422A hex [response Parameter ID (PKE)]. For more details, refer to example 2 in the Parameter ID (PKE) section 4.2.1.4 later.
Next is a data byte of 01 hex, followed by a data byte of 30 hex. These 2 data bytes make up a data word of 3001 hex [low word parameter value (PWE1)]. Next is a data byte of 00 hex, followed by a another data byte of 00 hex. These 2 data bytes make up a data word of 0000 hex [high word parameter value (PWE2)]. Thus, parameter P554.1 has a value of 3001 hex. For a more details, refer to example 2 in the Parameter value (PWE) section 4.2.1.6 later.

Following is a description of the terms used in the above explanations.

4.2.1.4 Parameter ID (PKE)

	Parameter ID (PKE)			Included in: GET SINGLE, SET SINGLE, response
	High Byte		Low Byte	
Bit No.:	15 12	11	10 0	
	AK	*SPM*	PNU	

The parameter ID (PKE) is **always** a 16-bit value.

Bits 0 to 10 (PNU) contain the number of the required parameter. The significance of the parameters can be taken from the Section “Parameter list” of the drive Instruction Manual. To distinguish between U or b base board parameters and the P or r base board parameters which share the same PNU numbers, the “Page Select” bit (bit 15) in the IND (see section 4.2.1.5) is used.

Bit 11 (SPM) is the toggle bit for parameter change reports.

The CBD does not support these parameter change reports.

Bits 12 to 15 (AK) contain the task- and response ID.

For the task telegram (master → drive), you can take the significance of the task ID from Table 4.1. It corresponds to the definitions in the “PROFIBUS profile, variable-speed drives“. Task IDs 10 to 15 are specific for SIMOVERT MASTER DRIVES, and are not defined in the PROFIBUS profile.

Task ID-	Significance	Response ID	
		positive	negative
0	No task	0	7 or 8
1	Request parameter value	1 or 2	↑
2	Change parameter value (word) for non-indexed parameters	1	|
3	Change parameter value (double word) for non-indexed parameters	2	|
4	Request description element **1**	3	|
5	Change description element **(not supported by CBD)**	3	|
6	Request parameter value (array) **1**	4 or 5	|
7	Change parameter value (array, word) for indexed parameters **2**	4	|
8	Change parameter value (array, double word) for indexed parameters **2**	5	|
9	Request the number of array elements	6	|
10	Reserved	-	|
11	Change parameter value (array, double word) and store in the EEPROM **2**	5	|
12	Change parameter value (array, word) and store in the EEPROM **2**	4	|
13	Change parameter value (double word) and store in the EEPROM	2	|
14	Change parameter value (word) and store in the EEPROM	1	↓
15	Read or change text **(not supported by CBD)**	15	7 or 8

Table 4.1 Task IDs (master ® converter)

1 The required parameter description element is specified in IND
2 The required element of the indexed parameter is specified in IND

For the response telegram (drive → master), you can take the significance of the response ID from Table 4.2. It also corresponds to the definitions in the “PROFIBUS profile, variable-speed drives”. The response IDs 11 to 15 are specific for SIMOVERT Master Drives, and are not defined in the PROFIBUS profile. Depending on the task ID, only certain response IDs are possible. If the response ID has the value 7 (task cannot be executed), then an error number is deposited in parameter value1 (PWE1).

Response ID	Significance	
0	No response	
1	Transfer parameter value for non-indexed parameters (word)	
2	Transfer parameter value for non-indexed parameters (double word)	
3	Transfer descriptive element **1**	
4	Transfer parameter value (array word) for indexed parameters**2**	
5	Transfer parameter value (array double word) for indexed parameters **2**	
6	Transfer the number of array elements	
7	Task cannot be executed (with error number)	
8	No operator change rights for the PKW interface	
9	Parameter change report (word)	**(not supported by CBD)**
10	Parameter change report (double word)	**(not supported by CBD)**
11	Parameter change report (array, word) **2**	**(not supported by CBD)**
12	Parameter change report (array, double word) **2**	**(not supported by CBD)**
13	Reserved	
14	Reserved	
15	Transfer text	**(not supported by CBD)**

Table 4.2 Response IDs (converter ® master)

1 The required parameter description element is specified in IND

2 The required element of the indexed parameter is specified in IND

Error numbers for the response 'task cannot be executed' (drive parameters). The error numbers are transferred in the PWE1 word of the response.

No.	Significance	
0	Illegal parameter No. (PNU)	If the PNU does not exist
1	Parameter value cannot be changed	If the parameter is a visualization parameter
2	Upper or lower limit exceeded	–
3	Erroneous sub-index	–
4	No array	For tasks for indexed parameters to a non-indexed parameter. e. g. task: 'Change parameter value (word, array)' for non-indexed parameter
5	Incorrect data type	–
6	Setting not allowed (can only be reset)	–
7	Descriptive element cannot be changed	Task not possible for Master Drives
11	No operator control rights	–see "parameterizing enable" parameter
12	Key word missing	Drive parameter: 'Access key' and/or 'special parameter access' not correctly set
15	No text array available	–
17	Task cannot be executed as a result of the operating status	Drive status doesn't permit the presently issued task
101	Parameter No. presently de-activated	-
102	Channel width too low	Parameter response too long for telegram
103	Incorrect PKW No.	Index response from base unit did not match index requested
104	Parameter value not admissible	-
105	Parameter is indexed	For tasks for non-indexed parameters to an indexed parameter. e. g. task: 'PWE, change word' for indexed parameter
106	Task is not implemented	-

Comment to error number 102:

This error number is transferred, if the parameter response to a parameter task is longer than the available 6 bytes of the response telegram, and therefore cannot be transferred.
The data is not distributed over several data telegrams.

Comment to error number 104:

This error number is transferred, if the parameter value, which is to be transferred, isn't assigned a function in the drive, or if at that instant, the change cannot be accepted for internal reasons (although it lies within the limits).

Example of error 104:

The 'PKW No.' parameter for the G-SST1 (interface 1) (number of net data in the PKW channel):

Minimum value:	0	(0 words)
Maximum value:	127	(corresponds to: Variable length)

Permissible values for USS: 0, 3, 4 and 127

If a change task, with a PWE which differs from 0, 3, 4 or 127, is issued to the unit, the response is as follows: 'Task cannot be executed', with error value 104.

PKE Example 1: Read value of parameter P101.4

This example details the decoding of the task PKE and the response PKE of example 1 in the Use of PKW object section 4.2.1 previously.

(PKE): **Task ID** (request from master)
P101 (=065 hex): Rated motor voltage
Read parameter value (array).

Parameter ID (PKE)

Bit No.:	15 12	11	10 0
	AK Task ID	SPM	PNU

	Byte 1								Byte 0							
Binary value	0	1	1	0	0	0	0	0	0	1	1	0	0	1	0	1
HEX value	6				0				6				5			

Bit 12..15: Value = 6 (= "6" hex); read parameter value (array)
Bit 0..11: Value = 101 (= "065" hex); parameter number without set parameter change report

(PKE): **Response ID** (response from drive)
P101 (=065 hex): Rated motor voltage
Transfer of requested parameter value (array).

Parameter ID (PKE)

Bit No.:	15 12	11	10 0
	AK Response ID	SPM	PNU

	Byte 1								Byte 0							
Binary value	0	1	0	0	0	0	0	0	0	1	1	0	0	1	0	1
HEX value	4				0				6				5			

Bit 12..15: Value = 4 (= "4" hex); transfer parameter value (array)
Bit 0..11: Value = 101 (= "065" hex); parameter number without set parameter change report

PKE Example 2: Set value of parameter P554.1 = 3001 hex

This example details the decoding of the task PKE and the response PKE of example 2 in the Use of PKW object section 4.2.1 previously.

(PKE): **Task ID** (request from master)
P554 (=22A hex): Source for the ON/OFF1 command (control word 1, bit 0)
Change parameter value (array, word) and store in the EEPROM.

Parameter ID (PKE)

Bit No.:	15 12	11	10 0
	AK Task ID	SPM	PNU

	Byte 1								Byte 0							
Binary value	1	1	0	0	0	0	1	0	0	0	1	0	1	0	1	0
HEX value	C				2				2				A			

Bit 12..15: Value = 12 (= "C" hex); change parameter value (array, word) and store in the EEPROM
Bit 0..11: Value = 554 (= "22A" hex); parameter number without set parameter change report

(PKE): **Response ID** (response from drive)
P554 (=22A hex): Source for the ON/OFF1 command (control word 1, bit 0):
Transfer of new value of changed parameter (array, word).

Parameter ID (PKE)

Bit No.:	15 12	11	10 0
	AK Task ID	SPM	PNU

	Byte 1								Byte 0							
Binary value	0	1	0	0	0	0	1	0	0	0	1	0	1	0	1	0
HEX value	4				2				2				A			

Bit 12..15: Value = 4 (= "4" hex); transfer parameter value (array)
Bit 0..11: Value = 554 (= "22A" hex); parameter number without set parameter change report

Fig. 4.1 Examples, parameter ID (PKE)

4.2.1.5 Parameter index (IND)

	Parameter index (IND)																Included in: GET SINGLE, SET SINGLE
	High Byte								Low Byte								
Bit No.:	15	14						8	7							0	
	Page Select	Value = 0							Index								

The index is an **8-bit value**, and for DeviceNet™, is always transferred in the **least significant byte** (bits 0 to 7) of the parameter index (IND). The most significant byte (bits 8 to 15) of the parameter index (IND) has the "Page Select" bit (bit 15) and seven bits (bits 8 to 14) of 0. If this most significant byte (high byte) = 00, then the PKE requests the P or r base board parameters. If this most significant byte (high byte) is = 80 hex, then the PKE (see section 4.2.1.4) requests the U or b base board parameters.

For an indexed parameter, the required index is transferred. The significance of the indices can be taken from the Section "Parameter list" of the drive Instruction Manual.

For a descriptive element, the number of the required element is transferred. The significance of the descriptive elements can be taken from the **PROFIBUS profile, variable-speed drives** (VDI/VDE 3689).

IND Example 1: Read value of parameter P101.4

This example details the decoding of the task IND of example 1 in the Use of PKW object section 4.2.1 previously.

(IND): P101 (=065 hex): Rated motor voltage
Read parameter value with index 4.

	Parameter index (IND)															
Bit No.:	15	14						8	7							0
	Byte 3								Byte 2							
Binary value	0	0	0	0	0	0	0	0	0	0	0	0	0	1	0	0
HEX value	0				0				0				4			

Bit 15 Page Select Value = 0 for P or r parameters, = 1 for U or b parameters
Bits 8..14: Value always 0
Bits 0....7: Index of parameter or the number of the descriptive element

IND Example 2: Set value of parameter P554.1 = 3001 hex

This example details the decoding of the task IND of example 2 in the Use of PKW object section 4.2.1 previously.

(IND): P554 (=22A hex): Source for the ON/OFF1 command (control word 1, bit 0)
Change parameter value with index 1.

Parameter index (IND)

Bit No.:	15	14	13	12	11	10	9	8	7	6	5	4	3	2	1	0
	Byte 3								Byte 2							
Binary value	0	0	0	0	0	0	0	0	0	0	0	0	0	0	0	1
HEX value	0				0				0				1			

Bit 15 Page Select Value = 0 for P or r parameters, = 1 for U or b parameters
Bits 8..14: Value always 0
Bits 0....7: Index of parameter or the number of the descriptive element

Fig. 4.2 Examples, parameter index (IND)

4.2.1.6 Parameter value (PWE)

	Parameter value (PWE)	
low word:	Byte 1	Byte 0
	Parameter value **low** (PWE1)	
high word:	Byte 3	Byte 2
	Parameter value **high** (PWE2)	

Included In: SET SINGLE, response

AK: Task- or response ID
SPM: Toggle bit for processing the parameter change report (not supported by CBD)
PNU: Parameter number

The parameter value (PWE) is **always** transferred as double word (32 bit). **Only one** parameter value can be transferred in a telegram.

A 32-bit parameter value is comprised of PWE1 (least significant word) and PWE2 (most significant word).

A 16-bit parameter value is transferred in PWE1 (least significant word). In this case, PWE2 (most significant word), must be set to 0.

PWE Example 1: Read value of parameter P101.4

This example details the decoding of the task PWE of example 1 in the Use of PKW object section 4.2.1 previously. Since this example was a GET SINGLE, the PWE is only used in the response from the drive. Since the response ID of the PKW was 4, the parameter is a 16 bit parameter and the value is completely contained in PWE1. If the response ID of the PKW had been 5, the parameter would have been a 32 bit parameter and the value would have been contained in PWE1 and PWE2.

(PWE): P101 (=065 hex): Rated motor voltage
Read parameter value with index 4.

	Parameter value (PWE)			
Low word (PWE1)	Byte 1		Byte 0	
Bit No.:	15	8	7	0
Hex value	0	F	A	0
High word (PWE2)	Byte 3		Byte 2	
Bit No.:	31	24	23	16
Hex value	0	0	0	0

Bits 0..15: Parameter value for 16-bit parameter or low component for 32-bit parameter
Bits 16..31: Value = 0 for 16-bit parameter or high component for 32-bit parameter

PWE Example 2: Set value of parameter P554.1 = 3001 hex

This example details the decoding of the task PWE of example 2 in the Use of PKW object section 4.2.1 previously. Since the response ID of the PKW was 4, the parameter is a 16 bit parameter and the value is completely contained in PWE1. If the response ID of the PKW had been 5, the parameter would have been a 32 bit parameter and the value would have been contained in PWE1 and PWE2.

(PWE): P554 (=22A hex): Source for the ON/OFF1 command (control word 1, bit 0)
Change the parameter value with index 1 to 3001.

Parameter value (PWE)

Low word (PWE1)	Byte 1		Byte 0	
Bit No.:	15	8	7	0
Hex value	3	0	0	1

High word (PWE2)	Byte 3		Byte 2	
Bit No.:	31	24	23	16
Hex value	0	0	0	0

Bits 0..15: Parameter value for 16-bit parameter or low component for 32-bit parameter
Bits 16..31: Value = 0 for 16-bit parameter or high component for 32-bit parameter

Fig. 4.3 Examples, parameter value

4.2.1.7 Rules for PKW object processing

- The length of the task can be 2 words (for a GET SINGLE) or 4 words (for a SET SINGLE). The length of the response is always 3 words
- The least significant byte (for words) must always be sent first, and then the most significant byte. The least significant word (for double words) must always be sent first, and then the most significant word.
- **One** task or **one** response only refers to **one** parameter value.
- The slave sends a response to a parameter task only when the data is available from the base MASTER DRIVES unit. In standard operation, this takes 64 .. 150 ms depending on the MASTER DRIVES type.
- In certain drive statuses (especially for initialization statuses), parameters are either not processed or with a long delay. In this case, a response delay of up to 40 seconds must be expected.
- The master may only issue a new parameter task after a response has been received regarding an issued parameter task.
- The master identifies the response to an issued task:
- evaluation of the response ID (refer to Table 4.2)
- evaluation of the parameter No. PNU
- if required by evaluating the parameter value PWE.

4.3 Process data area (PZD)

Control words and setpoints (tasks: Master → Drive) and status words and actual values (responses: Drive → Master) are transferred using process data (PZD). At the drive, the process data is processed with the highest priority and in the shortest time segments. The drive is controlled using the process data, for example, motor start/ stop and setpoint input.

Normally only “polled I/O” is used to communicate to the drive by sending and receiving PZD data.

4.3.1 Setting the number of PZD words

DeviceNet™ IO Message Connections are used to transfer process data. The number of process data words (4, 8, or 16) is determined by which DeviceNet™ I/O Assembly Instance is selected. The send and receive lengths can be different. The I/O Assembly Instance selection can be changed by 2 different methods described below. For either method, the following I/O Assembly definitions are used:

For Consumed connection path for Poll I/O only (tasks: Master → Drive), the choices are:
“120” first 4 PZD control and reference words “121” first 8 PZD words “122” all 16 PZD words

For Produced connection path for Poll I/O only (responses: Drive → Master), the choices are:
“170” first 4 PZD status and actual value words “171” first 8 PZD words “172” all 16 PZD words

For Produced connection path for Bit Strobe I/O only (responses: Drive → Master), this path is fixed at:
“170” first 4 PZD status and actual value words. It can not be changed.

(Method 1) Setting the power-up and reset default value of the appropriate produced or consumed connection path. Base drive parameters “CB parameter 1” and “CB parameter 2” are used for this purpose. The I/O Assembly Instance is selected using a 3 digit number equivalent to the 3 character ASCII symbol for the I/O assembly. **This is the recommended method**.

“CB parameter 1” -- sets the power-up and reset default value of the produced connection path of the DeviceNet™ polled I/O for the CBD. The selection choices: = 170 or 171 or 172

“CB parameter 2” -- sets the power-up and reset default value of the consumed connection path of the DeviceNet™ polled I/O for the CBD. The selection choices: = 120 or 121 or 122

“CB parameter 1” and “CB parameter 2” can be set independently. They can be set to the same or different PZD lengths.

The produced connection path of the DeviceNet™ bit strobe I/O for the CBD is fixed at 170.

	CUVC & CUMC	DC-Master	CU2
“CB parameter 1”	P711.x	U711.x	P696
“CB parameter 2”	P712.x	U712.x	P697

(Method 2) Using the DeviceNet™ explicit message channel. **This method is not recommended because the selection must be performed every time the drive is powered up or the CBD is reset through DeviceNet**ä. The I/O Assembly Instance is selected (using the symbolic segment method with a 3 character ASCII symbol) for each of the following:

Poll I/O messages – Connection object, instance 2

Consumed - Get and Set of attribute 16 (Consumed connection path) - Attribute 16 can only be changed (set) when the poll connection object is in the "configuring" state which is after the allocate, but before the EPR (expected packet rate) is set. **At power-up or reset the poll consumed connection path is always defaulted to "CB parameter 2".**

	CUVC & CUMC	DC-Master	CU2
"CB parameter 2"	P712.x	U712.x	P697

Produced - Get and Set of attribute 14 (Produced connection path) - Attribute 14 can only be changed (set) when the poll connection object is in the "configuring" state. **At power-up or reset the poll produced connection path is always defaulted to** "**CB parameter 1".**

	CUVC & CUMC	DC-Master	CU2
"CB parameter 1"	P711.x	U711.x	P696

Bit Strobe I/O messages – Connection object, instance 3

Consumed - Get only of attribute 16 (Consumed connection path) - always 8 bytes of which only 1 bit is assigned to each CBD. Currently, this bit is not used by the CBD. The receipt of bit strobe I/O message from the DeviceNet™ Master will produce a status message back to the Master and does reset the drive telegram monitoring function (refer to drive parameter "CB/TB TLg OFF Time").

	CUVC & CUMC	DC-Master	CU2
"CB/TB TLg OFF Time"	P722.x	U722.x	P695

Produced - Get only of attribute 14 (Produced connection path) - always 8 bytes. The DeviceNet specification limits a bit strobe response message to a maximum of 8 bytes.

4.3.2 Setting the meaning of the PZD words

The use of each process data word is set at the drive and is dependent on the actual function of the particular drive. Parameters that act as selector switches are used and are explained in detail in section 5.2. Until these selector parameters are set, the process data will not control the drive or reflect the drive actual values.

For the PZD combination, the number **i** of the process data (PZDi, i = 1 to 16) is entered into the combination value (refer to Section 5.2.1 “Setpoint channel (master to drive)”).

NOTE
The process data combination displayed here is only valid if a technology board is not installed. When using a technology board (for example a T300 or T100), the process data combination can be taken from the technology board manual.

Telegram:
Master ® drive
(setpoint channel)

PZD receive (DeviceNet™ consume)

PZD 1 STW1	PZD 2 HSW	PZD 3	PZD 4	PZD 5	PZD 6	PZD 7	PZD 8	PZD 9	PZD 10	PZD 11	PZD 12	PZD 13	PZD 14	PZD 15	PZD 16
1. word	2. word	3. word	4. word	5. word	6. word	7. word	8. word	9. word	10. word	11. word	12. word	13. word	14. word	15. word	16. word

Combination values for:

16-bit process data	3001	3002	3003	3004	3005	3006	3007	3008	3009	3010	3011	3012	3013	3014	3015	3016
16/32 bit PZD	3001	3032		3034		3006	3037		3039		3041		3043		3045	
(examples)	3001	3032		3004	3005	3036		3038		3040		3042		3044		3016
(also refer to Sec. 5.2)	3001	3002	3033		3035		3007	3038		3010	3041		3013	3044		3016

Telegram:
Drive ® master
(actual value channel)

PZD send (DeviceNet™ produce)

PZD 1 ZSW	PZD 2 HIW	PZD 3	PZD 4	PZD 5	PZD 6	PZD 7	PZD 8	PZD 9	PZD 10	PZD 11	PZD 12	PZD 13	PZD 14	PZD 15	PZD 16
1. word	2. word	3. word	4. word	5. word	6. word	7. word	8. word	9. word	10. word	11. word	12. word	13. word	14. word	15. word	16. word

Combination values for:

Assigning the actual value parameter for 16-bit process data

P694 i001	P694 i002	P694 i003	P694 i004	P694 i005	P694 i006	P694 i007	P694 i008	P694 i009	P694 i010	P694 i011	P694 i012	P694 i013	P694 i014	P694 i015	P694 i016

16/32 bit process data (examples)

P694 i001	P694 i002 = i003	P694 i004= i005	P694 i006	P694 i007= i008	P694 i009= i010	P694 i011= i012	P694 i013 = i014	P694 i015

(also refer to Sec. 5.2)

P694 i001	P694 i002	P694 i003 = i004	P694 i005 = i006	P694 i007	P694 i008= i009	P694 i010	P694 i011 = i012	P694 i013	P694 i014 = i015	P694 i016

PZD: Process data
STW: Control word
ZSW: Status word
HSW: Main setpoint
HIW: Main actual value

Fig. 4.4 Fixed, specified assignments and combination values for CU2.

The CUVC, CUMC, and DC Master are similar with different parameter numbers.

	CUVC & CUMC	DC-Master	CU2
"CB/TB actual values"	P734.01 to P734.16	U734.01 to U734.16	P694.01 to P694.16

Examples:

CUVC drive:

Connecting-up the setpoints in the CUVC drive:
P443.01 (Source main setpoint) = 3002 (using PZD word 2)
P554.01 (Source ON/OFF1) = 3100 (using bit 0 of PZD word 1)

Connecting-up the actual values in the CUVC drive:
P734.01 = 32 (status word in PZD word 1)
P734.02 = 69 (main setpoint in PZD word 2)
P734.03 = 148 (actual speed in PZD word 3)

DC Master drive:

Connecting-up the setpoints in the DC Master drive:
P433.01 (Source main setpoint) = 3002 (using PZD word 2), terminal 37 must be on
P654.01 (Source ON/OFF1) = 3100 (using bit 0 of PZD word 1)

Connecting-up the actual values in the DC Master drive:
U734.01 = 32 (status word in PZD word 1)
U734.02 = 209 (main setpoint in PZD word 2)
U734.03 = 167 (actual speed in PZD word 3)

CU2 drive:

Connecting-up the setpoints in the CU2 drive:
P443.01 (Source main setpoint) = 3032
P554.01 (Source ON/OFF1) = 3001 (using control word 1)
P584.01 (Source Technology regulator enable) = 3004 (using control word 2)
P526.01 (Source Technology regulator setpoint) = 3005

Connecting-up the actual values in the CU2 drive:
P694.01 = 968 (status word in PZD word 1)
P694.02 = 447 (main setpoint in PZD word 2)
P694.03 = 218 (actual speed in PZD word 3)

4.3.3 Instructions and rules regarding process data processing

- The lowest significant byte (for words) is always sent first and the lowest significant word (for double words).
- **Control word 1** must always be contained in the 1st word of the received setpoints. If control word 2 is required, this must be located in the 4th word.
- **Bit 10 "control from the PLC"** must always be set in control word 1, otherwise the drive will not accept the new setpoints and control words.
- The **consistency of the process data** is guaranteed within the data of a DeviceNet™ IO Message Connection. Even if more than 4 words are required, the data is not sent to the drive until all data has been transferred through the DeviceNet™ bus. Thus, all setpoints and control words are accepted by the drive at the same instant.

5 Start-up

5.1 Parameterization

...Section, Start-up / parameterization “Expert application“ of the drive Instruction Manual

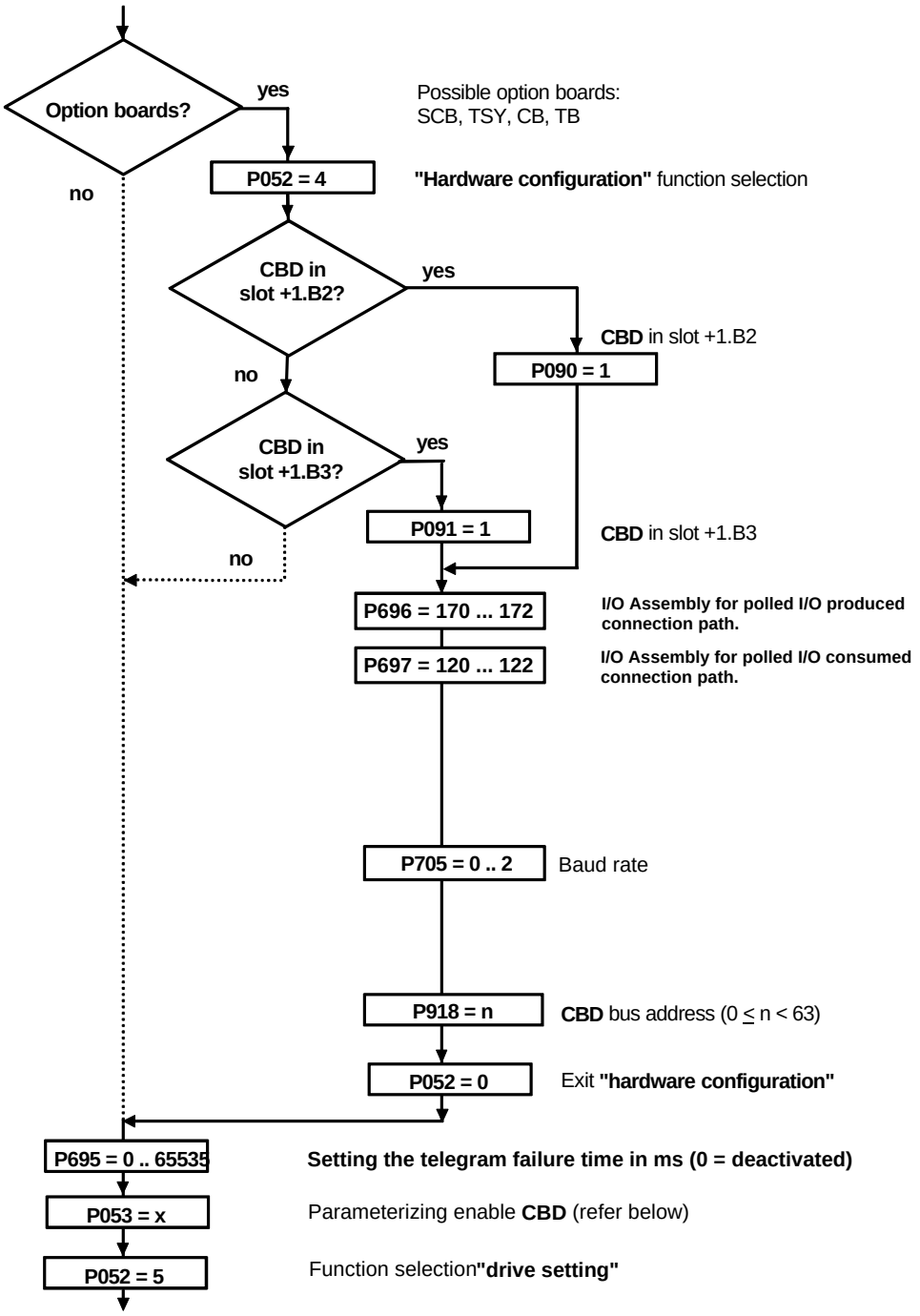

Further information in the Section, start-up / parameterization “Expert application” of the drive Instruction Manual.

Fig. 5.1 Parameterization “hardware configuration“ of CU2. CUVC and DC Master are similar with different parameter numbers.

♦ **P090** (board, slot 2) and **P091** (board, slot 3):

P090 and P091 are only required for the CU2.

(also refer to the drive Instruction Manual, Section “Parameter list”)

These parameters can also be changed at any time. Thus you can also turn off the DeviceNet™ connection with these parameters. **This turn off will cause the DeviceNet ä bus interface to disconnect from the drive.** In this case, **CBD** stops communications via the bus, and neither receives DeviceNet™ data telegrams nor sends DeviceNet™ data telegrams.

♦ **“CB parameter 1”**: **I/O assembly for polled I/O produced connection path**

	CUVC & CUMC	DC-Master	CU2
“CB parameter 1”	P711.x	U711.x	P696

The power-up and reset default value of the produced connection path of the DeviceNet™ polled I/O connection can be set using this parameter. The poll I/O produced connection path is attribute 14 of instance 2 of the connection class (class 5). The selection choices:

“CB parameter 1” = 170 – 4 PZD status and actual value words - equivalent to class 5, instance 2, attribute 14 = “170”
“CB parameter 1” = 171 – 8 PZD status and actual value words - equivalent to attribute 14 =“171”
“CB parameter 1” = 172 – 16 PZD status and actual value words - equivalent to attribute 14 =“172”

“CB parameter 1” must be set to one of the valid values, even if the DeviceNet™ polled I/O connection will not actually be used. If the I/O assembly lies outside the valid range (170 .. 172), then fault F080 is displayed when status 4 “hardware configuration“ is exited. After the fault has been acknowledged, the unit again goes into the “hardware configuration“ status, and the erroneous parameterization can be corrected. The cause of the F080 can be displayed with parameter “CB/TB diagnostics” index 1.

	CUVC & CUMC	DC-Master	CU2
“CB/TB diagnostics”	r732.1	n732.1	r731.1

The following indexed parameter are used to define which values are sent, by entering the associated parameter No.

	CUVC & CUMC	DC-Master	CU2
“CB/TB actual values”	P734.01 to P734.16	U734.01 to U734.16	P694.01 to P694.16

Example:

It is desired that the drive send 8 words of PZD status and actual value data every time the master sends a polled I/O telegram. Thus, “CB parameter 1” should be set = 171.

♦ **"CB parameter 2"**: **I/O assembly for polled I/O consumed connection path**

	CUVC & CUMC	DC-Master	CU2
"CB parameter 2"	P712.x	U712.x	P697

The power-up and reset default value of the consumed connection path of the DeviceNet™ polled I/O connection can be set using this parameter. The poll I/O produced connection path is attribute 16 of instance 2 of the connection class (class 5). The selection choices:

"CB parameter 2" = 120 – 4 PZD control and reference words - equivalent to class 5, instance 2, attribute 16 = "120"
"CB parameter 2" = 121 – 8 PZD control and reference words - equivalent to attribute 16 ="121"
"CB parameter 2" = 122 – 16 PZD control and reference words - equivalent to attribute 16 ="122"

"CB parameter 2" must be set to one of the valid values, even if the DeviceNet™ polled I/O connection will not actually be used. If the I/O assembly lies outside the valid range (120 .. 122), then fault F080 is displayed when status 4 "hardware configuration" is exited. After the fault has been acknowledged, the unit again goes into the "hardware configuration" status, and the erroneous parameterization can be corrected. The cause of the F080 can be displayed with parameter "CB/TB diagnostics" index 1.

	CUVC & CUMC	DC-Master	CU2
"CB/TB diagnostics"	r732.1	n732.1	r731.1

Example:

It is desired that the master send 4 words of PZD control and reference data when it sends a polled I/O telegram to this drive. Thus, "CB parameter 2" should be set = 120.

"CB parameter 1" and "CB parameter 2" can be set independently. They can be set to the same or different PZD lengths.

The first 4 PZD words are always sent by the drive in response to a bit strobe I/O message from the master.

♦ **"CB parameter 10"**: **Baud rate of the slave connected to the DeviceNetÔ bus**

	CUVC & CUMC	DC-Master	CU2
"CB parameter 10"	P720.x	U720.x	P705

Parameter value	**Baud rate**
0 (pre-assignment)	125 kbps
1	250 kbps
2	500 kbps

The baud rate of the slave connected to the DeviceNet™ bus is set using this parameter. The following table is valid:

If the baud rate lies outside the valid range (0 ..2), fault F080 is displayed when status 4 "hardware configuration" is exited. After the fault has been acknowledged, the unit goes back into the status "hardware configuration" and the erroneous parameterization can be corrected. The cause of the F080 can be displayed with parameter "CB/TB diagnostics" index 1.

	CUVC & CUMC	DC-Master	CU2
"CB/TB diagnostics"	r732.1	n732.1	r731.1

In compliance with DeviceNet™ specifications, if the baud rate is changed, the new value will not become effective until the drive is powered off and then powered on again.

♦ **P918** (CB bus address): **DeviceNetÔ MAC ID (Node address) of the drive**

(Also refer to the drive Instruction Manual, Section "Parameter list")

The MAC ID (or node address) of the drive on the DeviceNet™ bus is set here.

NOTE

After the above settings have been made, the **CBD** is initialized by the drive, and is ready for communications via the DeviceNet™ bus. The LED's on the CBD show the CBD status. After being set up, and with the master communicating, the red, yellow, and green LED's will blink. The red indicates that the CBD board itself is operating, the yellow indicates that the CBD is successfully communicating to the CU or technology board, and the green indicates that there is cyclic process data (PZD) transfer with the master.

The drive will only communicate with the master. To change parameters or control the drive by process data from the DeviceNetÔ master, additional steps are required.

The parameterization must be enabled (by "parameterizing enable" below), and the process data "connected-up" in the drive (see following section 5.2).

- **parameterizing enable**:

	CUVC & CUMC	DC-Master	CU2
"parameterizing enable"	P053	P927	P053

This parameter is important for **CBD** if you wish to set or change parameters of the drive (including technology board) via the DeviceNet™ vendor specific PKW object using the SET SINGLE service of the explicit messaging mode.

In this case, set parameter **"parameterizing enable"** (also refer to the drive Instruction Manual, Section "Parameter list") to an uneven value (e. g. 1, 3, 7 etc.). Using parameter **"parameterizing enable"**, you can define from which locations parameters may be changed (PMU, **CBD** etc.).

Example:

"parameterizing enable" = 1: Parameterizing enable only from **CBD**
= 3: Parameterizing enable, from **CBD**+PMU
= 7: Parameterizing enable, from **CBD**+PMU+SST1 (OP)

If the parameter change (=parameterizing enable) is enabled via **CBD** (**"parameterizing enable"** = 1, 3 etc.), all other parameter settings can be realized from the DeviceNet™ bus master via the bus.

If you wish to **only** read parameters of the drive (including technology board) via the DeviceNet™ vendor specific PKW object using the GET SINGLE service of the explicit messaging mode, this parameter does not need to be set to enable the CBD.

- For additional parameter setting, which involve data transfer via the DeviceNet™ bus (for example, process data (PZD) interlocking), you must know the number of process data words received from the slave.

5.2 Process data combination

Process data combination includes combining setpoints as well as control bits. The transferred process data only become effective when the used bits of the control words, the setpoints, status words and actual values are connected through to the dual port RAM interface (Fig. 5.2).

CBD stores the process data received at permanently fixed addresses in the dual port RAM. Each process data (PZDi, i = 1..16) is assigned a combination value (e. g. 3001 for PZD1). The combination value is also used to define as to whether the appropriate PZDi (i = 1 ..16) involves a 16-bit or a 32-bit value (refer to Fig. 4.4).

Using selector switches (for example P554.1 = selector switch for bit 0 of control word 1), the individual bits of the control words and the setpoints can be assigned a specific PZDi in the dual port RAM. In this case the selector switch is assigned to the combination value associated with the required PZDi (example, refer to Fig. 5.4).

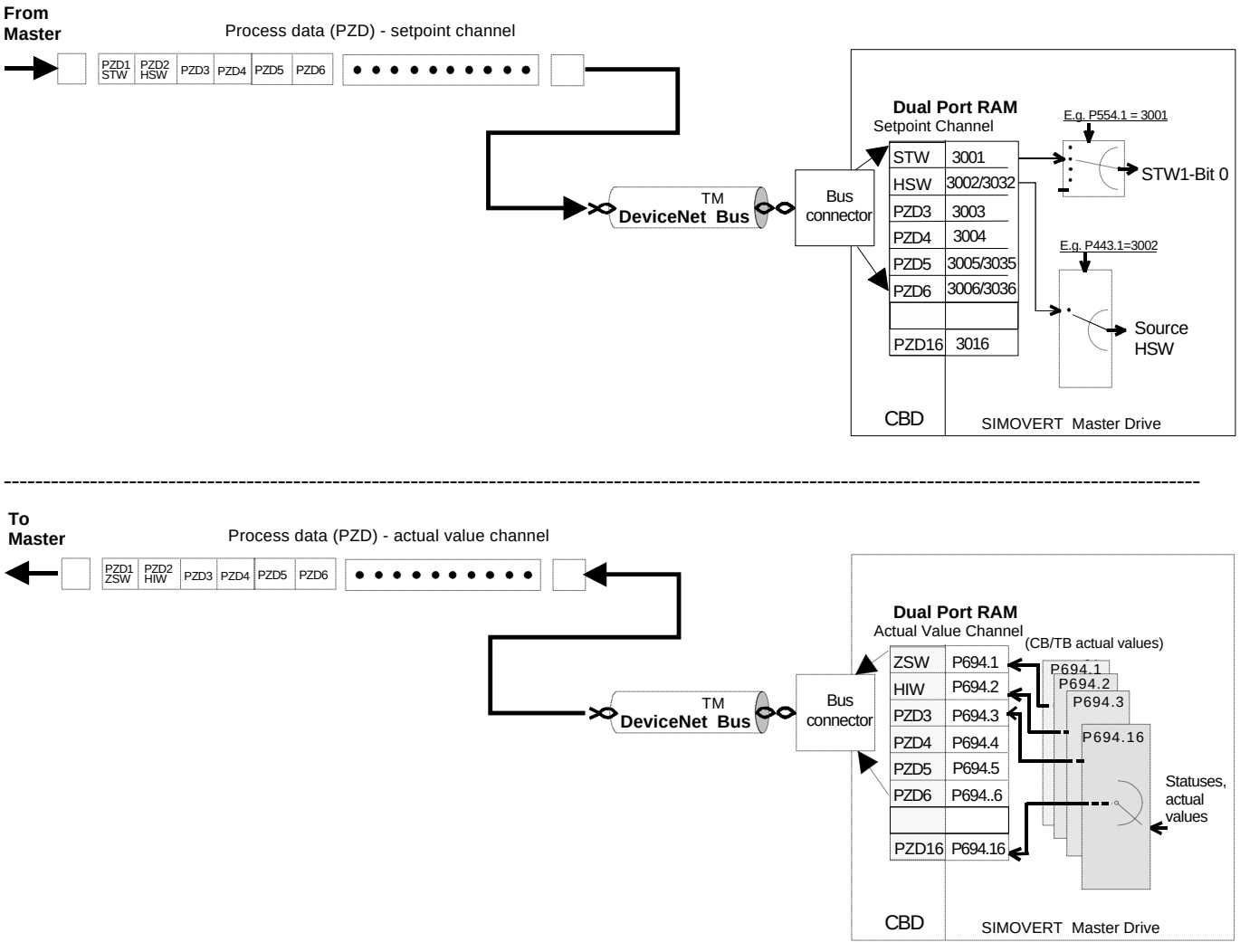

Fig. 5.2 Process data "wiring" for the setpoint- and actual value channels

5.2.1 Setpoint channel (master to drive)

...Section Start-up / parameterization “Expert application“ of the drive Instruction Manual

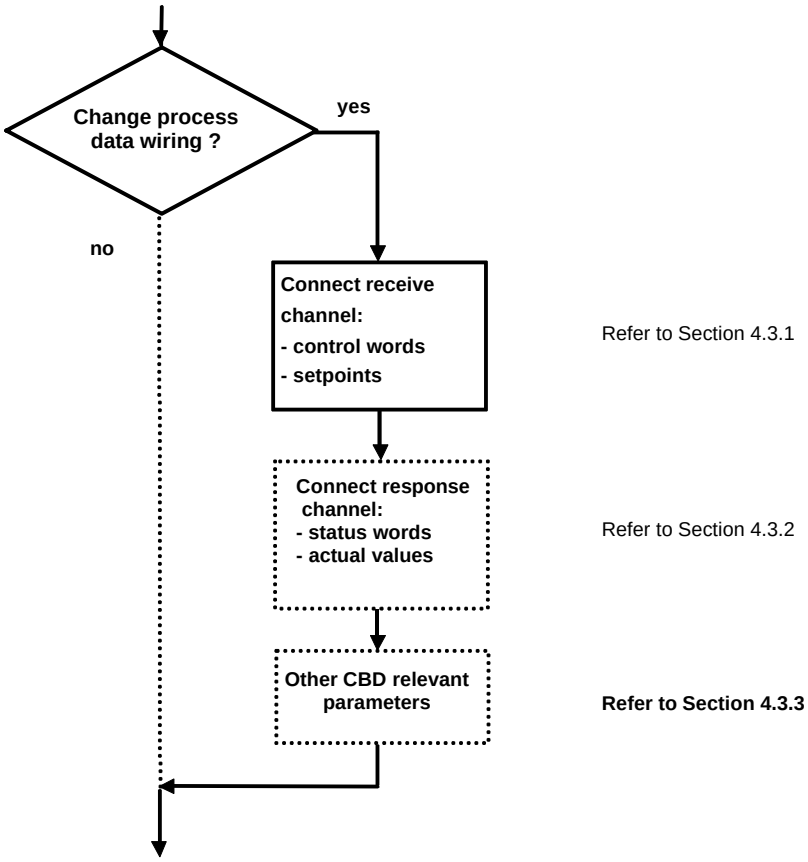

Continue in Section Start-up / parameterization “Expert application” of the drive Instruction Manual.

Fig. 5.3 Process data combination, setpoint channel

NOTE
The process data combination of the setpoint channel can also be set via the DeviceNet™ bus, if “parameterizing enable” was previously set to an uneven number (5.1 Parameterization).

- Using the “tens digit” of the combination value, a differentiation is made between 16-bit process data (e.g. 30**0**2) and 32-bit process data (e.g. 30**3**2).
- If process data is transferred as 16-bit quantity, then set the selector switch (refer to the Section “Process data” in the drive Instruction Manual“), to the required combination value, associated with the PZDI, for 16-bit process data (example: PZD2 occupied by 16-bit process data; the associated combination value is then 3002).
- If process data is transferred as 32-bit quantity, then set the selector switch (refer to the Section “Process data” in the drive Instruction Manual“), to the required combination value associated with the PZDi for 32-bit process data. In this case, use the combination value of the least significant PZDi (example: PZD**2**+PZD3 occupied by 32-bit process data; the associated combination value is then 303**2**).

- The **first** word (associated combination value: 3001) of the received process data is **always** assigned to control word 1 (STW1). The significance of the control word bit is provided in the converter Instruction Manual, Section 4.3 “Start-up aids”.
- The **second** word is **always** assigned to the main setpoint (HSW).

  If the main setpoint is transferred as 32-bit process data, then it also occupies word 3. In this case, the most significant part is transferred in word 2 and the least significant part of the main setpoint, in word 3.

- If a control word 2 (STW2) is transferred, then STW2 is **always** assigned the **fourth** word (associated combination value = 3004). The significance of the control word bit can be taken from the converter Instruction Manual, Section “Start-up aids”.
- The combination value is **always** 4 digits. For the combination values, associated with the process data (PZD1 to PZD16), please refer to Fig. 4.4.

  Data entry at the PMU is realized as a 4-digit number (e. g. 3001). For parameterization via DeviceNet™ bus, the combination value is entered via the bus, as well as via the PMU (e. g. combination value 3001 is transferred as 3001 hex; refer to the following example in Fig. 5.4).

Example for the setpoint channel: PZD combination for control word 1 bits (STW1), main setpoint (HSW) and control word 2 bits (STW2).

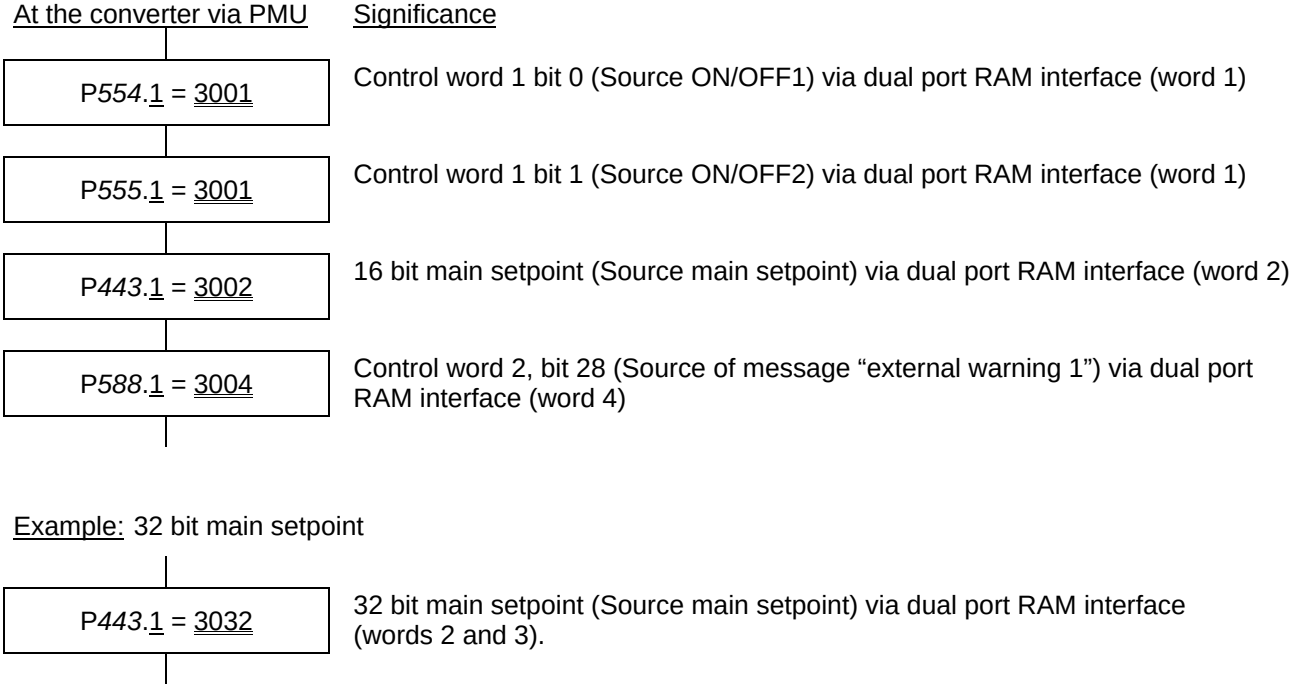

Fig. 5.4 Parameterizing example for CU2 for process data combination, setpoint channel. Other drives are similar with different parameter numbers

Italics — *Parameter number 443* (for PMU as decimal number, via DeviceNet™ bus, as equivalent HEX number = 1BB hex).

Single underline: — Index (for PMU as decimal number, via DeviceNet™ bus as equivalent HEX number).

Double underline: — Combination value: Defines, whether the parameter selected by the *parameter number* is to be transferred as 16-bit or 32-bit value, and at which position in the PZD setpoint telegram (PZDi), the parameter is to be transferred.

Starting from the converter factory setting, the above parameterizing example (Fig. 5.4) represents a functional wiring of the process data (setpoints).

5.2.2 Actual value channel (drive to master)

...Section, Start-up / parameterization “Expert application” of the drive Instruction Manual

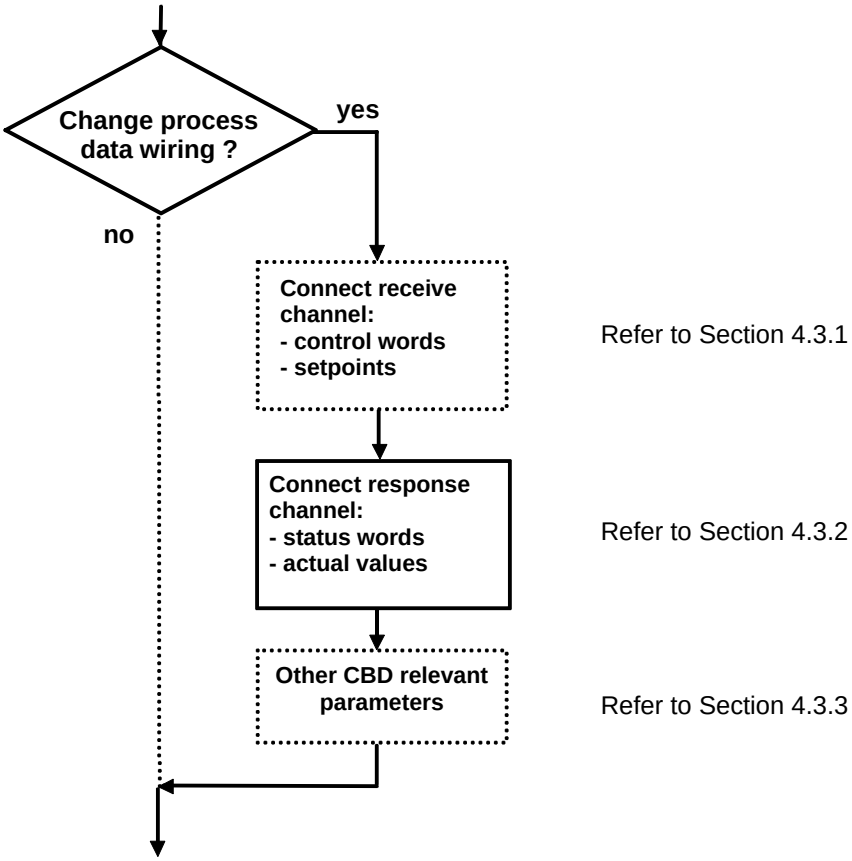

Continue in Section, Start-up / parameterization “Expert application” of the drive Instruction Manual.

Fig. 5.5 Process data combination, actual value channel for CU2. Other drives are similar with different parameter numbers.

The actual value process data (PZDi, i = 1..16) are assigned to the appropriate status words and actual values using the indexed parameter **“CB/TB actual values”** (also refer to Fig. 4.4).

	CUVC & CUMC	DC-Master	CU2
“CB/TB actual values”	P734.01 to P734.16	U734.01 to U734.16	P694.01 to P694.16

Each index stands for a process data (e. g. 5 → PZD5 etc.). Please enter the number of the parameter, whose value you wish to transfer using the appropriate process data, into parameter “CB/TB actual values” (also refer to the converter Instruction Manual, Section 5 “Parameter list”) under the particular index.

The status word should always be entered in PZD1 word (Fig. 4.4) of the PZD response (actual value channel), and the main actual value in the PZD2 word. The further assignment of PZD (PZD1 up to, if required, PZD16), is not defined. If the main actual value is transferred as 32-bit value, then it occupies PZD2 and PZD3.

The significance of the status word bit is described in the converter Instruction Manual, Section “Start-up aids”.

Example for the actual value channel: PZD combination for status word 1 (ZSW1), main actual value (HIW) and status word 2 (ZSW2)

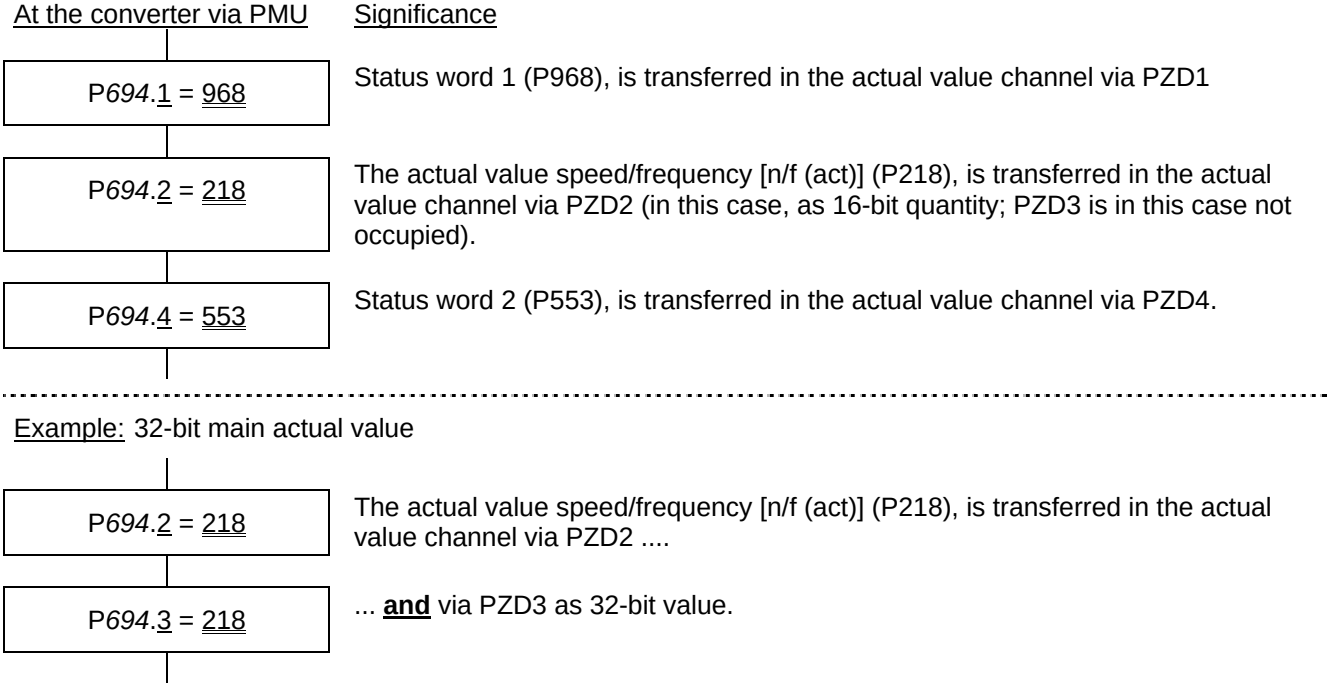

Fig. 5.6 Parameterizing example for the CU2 process data combination, actual value channel. Other drives have different parameter numbers.

	CUVC & CUMC	DC-Master	CU2
"CB/TB actual values"	P734.01 to P734.16	U734.01 to U734.16	P694.01 to P694.16

NOTE
If actual values are transferred as 32-bit data, then you must enter the associated parameter numbers at 2 consecutive words (indices) (refer to Fig. 5.6).

Italics: *P694 (CB/TB actual values)*, for PMU, displayed as decimal number, via DeviceNet™ bus; transferred as equivalent HEX number (2B6 hex).

Single underline: Index (for PMU as decimal number, via DeviceNet™ bus as equivalent HEX number): Specifies, at which position in the PZD actual value telegram (PZDi), the actual value, selected by the **parameter number**, is transferred.

Double underline: **Parameter number** of the required actual value.

5.2.3 Other CBD-relevant parameters

...Section, Start-up / parameterization “Expert application” of the drive Instruction Manual

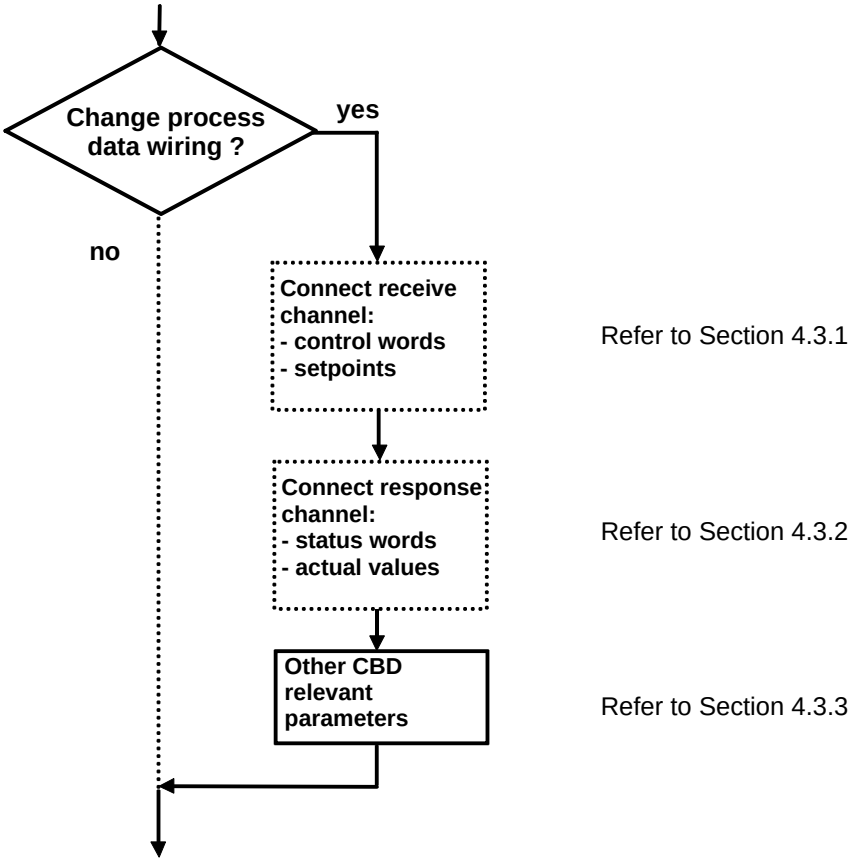

Continue in the Section, Start-up / parameterization “Expert application” of the drive Instruction Manual.

Fig. 5.7 Optional parameters

♦ **“CB/TB TLg OFF Time”** **Telegram failure time**

	CUVC & CUMC	DC-Master	CU2
“CB/TB TLg OFF Time”	P722.x	U722.x	P695

Using parameter **“CB/TB TLg OFF Time”** (also refer to the drive Instruction Manual, Section “Parameter list”) you can define whether the process data entered by **CBD** in the dual port RAM is monitored by the drive. The parameter value of this parameter corresponds to the telegram failure time in ms. The parameter pre-assignment value is 10 ms, i. e. a maximum of 10 ms can lie between 2 received process data DeviceNet™ messages, otherwise the drive shuts down with fault **F082**. The monitoring is disabled for a parameter value of 0.

The drive monitors process data entry into the dual port RAM from the instant when **CBD** enters process data into the dual port RAM for the first time after power-up of the drive. Fault **F082** can only be initiated from this time instant onwards!

PZD data can be sent by DeviceNet™ I/O (both Bit Strobe and Poll) messages. PZD data can also be sent by DeviceNet™ explicit messages using the assembly class. PKW requests sent by explicit messages using the PKW object (see previous Parameter area (PKW) section 4.2) do not update the PZD information and do not affect this drive telegram monitoring function.

NOTE
If the “on” command (bit 0) is connected to the dual port RAM interface (Section 5.2.1 “Setpoint channel (master to drive)”), then the following must be observed for safety reasons: An "OFF2" or "OFF3" command must be **additionally** parameterized to the terminal strip/PMU (refer to the drive Instruction Manual, Section “Control word”), as otherwise the converter cannot be powered-down with a defined command if the **communications were to fail**!

♦ **P692** (Response TLg OFF) **Response to telegram failure**

P692 is only used on the CU2.

Using parameter **P692** (also refer to the drive Instruction Manual, Section “Parameter list”) you can define as to how the drive should respond to a telegram failure.

For a parameter value 0 “Fault“ the drive immediately shuts down with fault **F082**, and the drive coasts down.

With parameter value 1 “OFF3(fast stop)“, the drive executes an **OFF3** command (OFF with fast stop) and then goes into the fault status **F082**.

This parameter is only available from software version 1.3 (MASTER DRIVES CU1 and CU2) and software version 1.2 (MASTER DRIVES CU3).

5.3 Information for the DeviceNet master

5.3.1 Creating EDS Stub File for CBD

The following information is required for a user to create an EDS stub file for the CBD. Depending on the management software used, portions of this information can be obtained directly from the CBD through DeviceNet™ communications.

Vendor ID: 145

Vendor Name: Siemens Energy & Automation

Device Type: Communication Adapter

Product Code: 1

Product Name: Siemens CBD

Major Revision: (must be obtained from CBD using DeviceNet™ communications)

Minor Revision: (must be obtained from CBD using DeviceNet™ communications)

Catalog Number: MFLB 6SE7090-0XX84-0FK0

Strobed Connection: (Normally turn off Enable on Strobed for PLC scanners because Poll and Strobe cannot be turned on/off in ladder logic. The CBD does support Strobed for other applications)

- ☐ Enable

  Input Size: 8 Bytes

  Output Size: 8 Bytes

Polled Connection:

- ☑ Enable

  Input Size: 8 Bytes

  Output Size: 8 Bytes

COS/Cyclic Connection:

- ☐ Enable

  Input Size: 0 Bytes

  Output Size 0 Bytes

40 character description: CBD - Master Drive Communication Board

5.3.2 Using Explicit Messaging with a PLC Scanner

PKW data is normally not used – since drive commissioning is performed by SIMOVIS or other means. If PKW data is not used, this section can be skipped.

The following information should help in using the PKW object to read and change drive parameters.

The explicit message program control feature is used. The Get Attribute Single and Set Attribute Single services are used.

The vendor specific PKW object is used. It is class 100 (64 hex). Only Instance 1 is used. Only attribute 1 is used. The drive parameter number, parameter number index, and parameter value (if required) is included in the data field.

Example 1: Read value of parameter P101.4

The PLC word data is in hex.

Block Transfer Write Data:

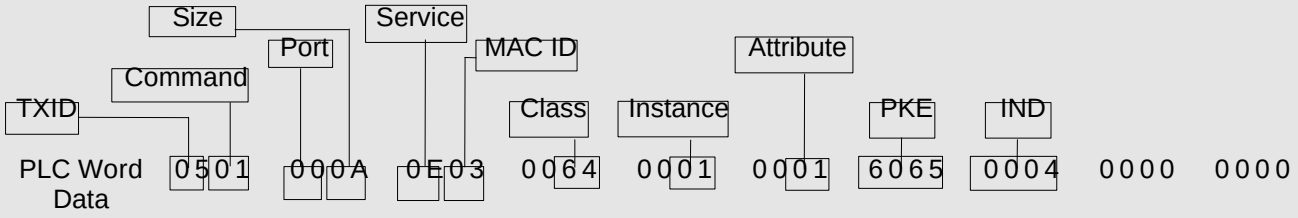

TXID = 05 (range 01 to FF hex = 1 to 255) should be incremented by PLC logic before each new request
Command = 01 (always 01) execute transaction block
Port = 00 (range 00 to 01) DeviceNet port of scanner for command (00 = Channel A, 01 = Channel B)
Size = 0A hex (choice of 0A hex for Get Single or 0E hex for Set Single)
Service = 0E hex (choice of 0E hex = 14 for Get Single or 10 hex = 16 for Set Single)
MAC ID = 03 (range 00 to 3F hex = 0 to 63) address of drive set in P918
Class = 64 hex (always 64 hex) class number of PKW object
Instance = 01 (always 01)
Attribute = 01 (always 01)
PKE = 6065 hex (range 0000 to FFFF hex) 6065 hex = Read array parameter P101.4 – for more details, refer to example 1 in the Parameter ID (PKE) section 4.2.1.4 previously
IND = 0004 hex (range low byte = 00 to FF hex = 0 to 255), high byte = 0 (may be non-zero in future) 0004 hex = index 4 – for more details, refer to example 1 in the Parameter index (IND) section 4.2.1.5 previously

Block Transfer Read Data:

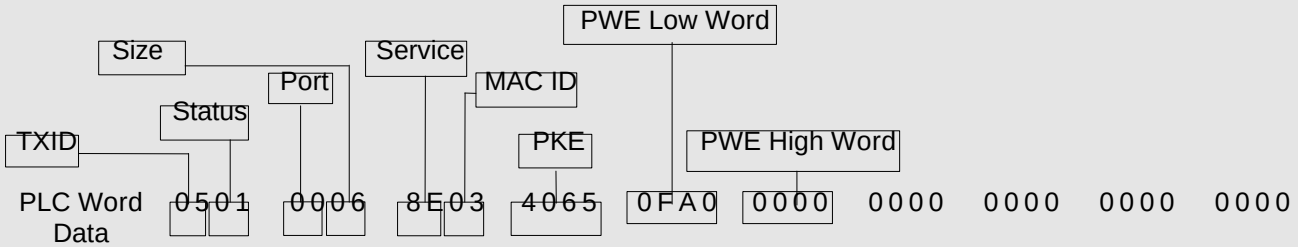

TXID = 05 -- must be same number as request TXID above
Status = 01 -- (must be 01) -- transaction successful
Port = 00 -- must be same number as request port above
Size = 06 -- (must always be 06)
Service = 0E hex -- must be same number as request service above + 80 hex
MAC ID = 3 -- must be same address of drive as request above
PKE = 4065 hex = Transfer of requested parameter P101.4 16 bit value (array) -- for more details, refer to example 1 in the Parameter ID (PKE) section 4.2.1.4 previously
PWE = 0FA0 hex -- 16 bit value of parameter P101.4 – high word is not used for 16 bit values -- for more details, refer to example 1 in the Parameter value (PWE) section 4.2.1.6 previously

Example 2: Set value of parameter P554.1 = 3001 hex

The PLC word data is in hex.

Block Transfer Write Data:

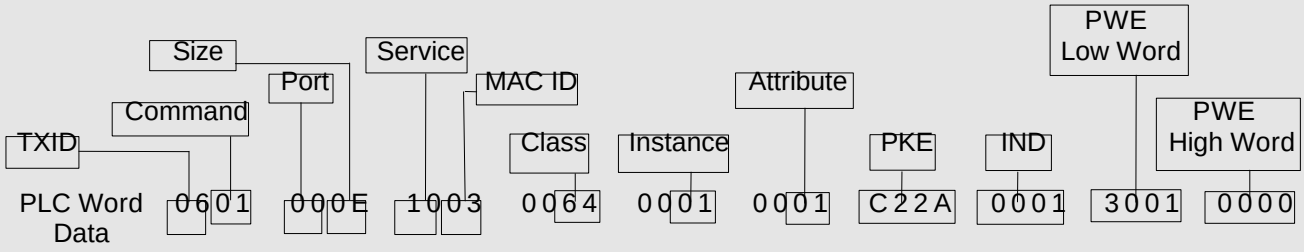

TXID = 06 (range 01 to FF hex = 1 to 255) should be incremented by PLC logic before each new request
Command = 01 (always 01) execute transaction block
Port = 00 (range 00 to 01) DeviceNet port of scanner for command (00 = Channel A, 01 = Channel B)
Size = 0E hex (choice of 0A hex for Get Single or 0E hex for Set Single)
Service = 10 hex (choice of 0E hex = 14 for Get Single or 10 hex = 16 for Set Single)
MAC ID = 03 (range 00 to 3F hex = 0 to 63) address of drive set in P918
Class = 64 hex (always 64 hex) class number of PKW object
Instance = 01 (always 01)
Attribute = 01 (always 01)
PKE = C22A hex (range 0000 to FFFF hex) C22A hex = Set array parameter P554.1 – for more details, refer to example 2 in the Parameter ID (PKE) section 4.2.1.4 previously
IND = 0001 hex (range low byte = 00 to FF hex = 0 to 255), high byte = 0 (may be non-zero in future) 0004 hex = index 4 – for more details, refer to example 2 in the Parameter index (IND) section 4.2.1.5 previously
PWE = 3001 hex – new 16 bit value of parameter P554.1 – high word is not used for 16 bit values and is set to 0 -- for more details, refer to example 2 in the Parameter value (PWE) section 4.2.1.6 previously

Block Transfer Read Data:

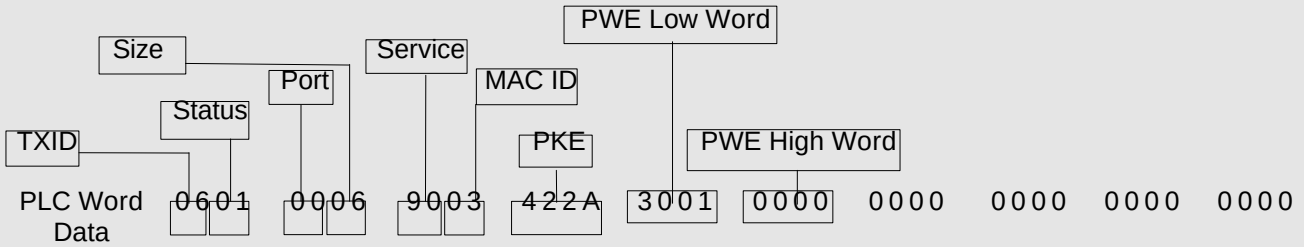

TXID = 06 -- must be same number as request TXID above
Status = 01 -- (must be 01) -- transaction successful
Port = 00 -- must be same number as request port above
Size = 06 -- (must always be 06)
Service = 90 hex -- must be same number as request service above + 80 hex
MAC ID = 03 -- must be same address of drive as request above
PKE = 422A hex = Transfer of set parameter P554.1 16 bit value (array) -- for more details, refer to example 2 in the Parameter ID (PKE) section 4.2.1.4 previously
PWE = 3001 hex -- 16 bit new value of parameter P554.1 – high word is not used for 16 bit values -- for more details, refer to example 2 in the Parameter value (PWE) section 4.2.1.6 previously

Example 3: Read value of 32 bit parameter P421.4

The PLC word data is in hex.

Block Transfer Write Data:

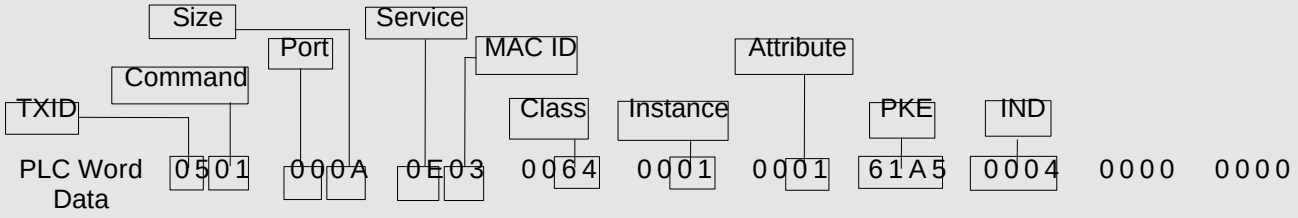

TXID = 05 (range 1 to FF hex = 1 to 255) should be incremented by PLC logic before each new request
Command = 01 (always 01) execute transaction block
Port = 00 (range 00 to 01) DeviceNet port of scanner for command (00 = Channel A, 01 = Channel B)
Size = 0A hex (choice of 0A hex for Get Single or 0E hex for Set Single)
Service = 0E hex (choice of 0E hex = 14 for Get Single or 10 hex = 16 for Set Single)
MAC ID = 03 (range 00 to 3F hex = 0 to 63) address of drive set in P918
Class = 64 hex (always 64 hex) class number of PKW object
Instance = 01 (always 01)
Attribute = 01 (always 01)
PKE = 61A5 hex (range 0000 to FFFF hex) 61A5 hex = Read array parameter P421.4 – for more details, refer to the Parameter ID (PKE) section 4.2.1.4 previously
IND = 0004 hex (range low byte = 00 to FF hex = 0 to 255), high byte = 0 (may be non-zero in future) 0004 hex = index 4 – for more details, refer to the Parameter index (IND) section 4.2.1.5 previously

Block Transfer Read Data:

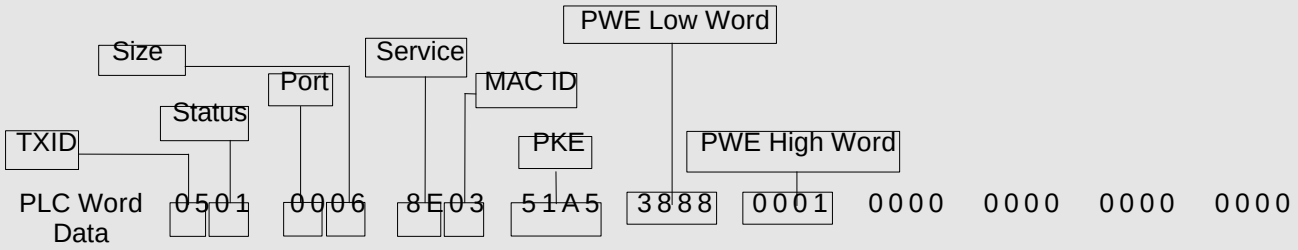

TXID = 05 -- must be same number as request TXID above
Status = 01 -- (must be 01) -- transaction successful
Port = 00 -- must be same number as request port above
Size = 06 -- (must always be 06)
Service = 0E hex -- must be same number as request service above + 80 hex
MAC ID = 03 -- must be same address of drive as request above
PKE = 51A5 hex = Transfer of requested parameter P421.4 32 bit value (array) -- for more details, refer to the Parameter ID (PKE) section 4.2.1.4 previously
PWE = 00013888 hex -- 32 bit value of parameter P421.4 -- for more details, refer to the Parameter value (PWE) section 4.2.1.6 previously

Example 4: Read value of parameter U003.1 (with CUMC)

The PLC word data is in hex.

Block Transfer Write Data:

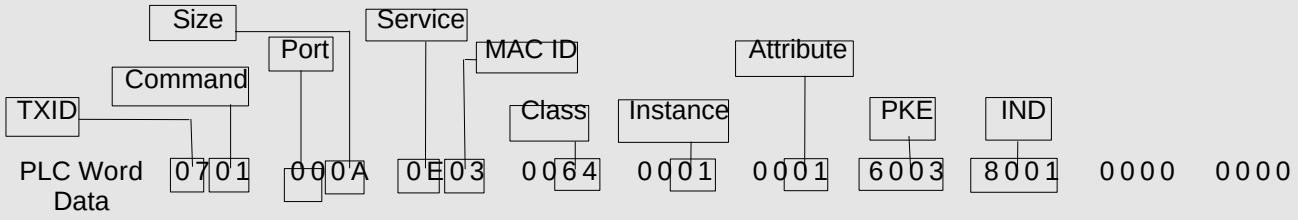

TXID = 07 (range 01 to FF hex = 1 to 255) should be incremented by PLC logic before each new request
Command = 01 (always 01) execute transaction block
Port = 00 (range 00 to 01) DeviceNet port of scanner for command (00 = Channel A, 01 = Channel B)
Size = 0A hex (choice of 0A hex for Get Single or 0E hex for Set Single)
Service = 0E hex (choice of 0E hex = 14 for Get Single or 10 hex = 16 for Set Single)
MAC ID = 03 (range 00 to 3F hex = 0 to 63) address of drive set in P918
Class = 64 hex (always 64 hex) class number of PKW object
Instance = 01 (always 01)
Attribute = 01 (always 01)
PKE = 6003 hex (range 0000 to FFFF hex) 6003 hex = Read array parameter U003.1 – for more details, refer to example 1 in the Parameter ID (PKE) section 4.2.1.4 previously
IND = 8001 hex (range low byte = 00 to FF hex = 0 to 255), (choice of high byte = 00 or 80 hex) 8001 hex = index 1 – the high byte = 80 requests the U or b base board parameters, the high byte = 00 requests the P or r base board parameters. The low byte = 01 requests index 1 of the parameter number, for more details refer to the Page Select bit and example 1 in the Parameter index (IND) section 4.2.1.5 previously

Block Transfer Read Data:

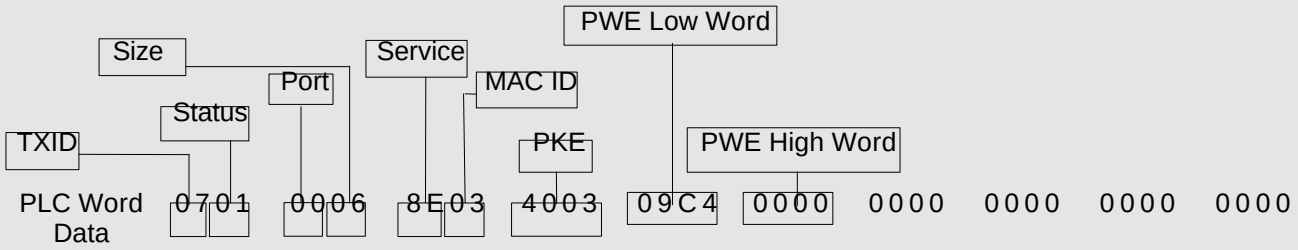

TXID = 07 -- must be same number as request TXID above
Status = 01 -- (must be 01) -- transaction successful
Port = 00 -- must be same number as request port above
Size = 06 -- (must always be 06)
Service = 0E hex -- must be same number as request service above + 80 hex
MAC ID = 3 -- must be same address of drive as request above
PKE = 4003 hex = Transfer of requested parameter U003.1 16 bit value (array) -- for more details, refer to example 1 in the Parameter ID (PKE) section 4.2.1.4 previously
PWE = 09C4 hex -- 16 bit value of parameter U003.1 – high word is not used for 16 bit values -- for more details, refer to example 1 in the Parameter value (PWE) section 4.2.1.6 previously

Notes

6 Troubleshooting

This section only describes the alarms and error numbers generated from **CBD**. Other error- and alarm messages, the fault causes and the appropriate counter-measures, are described in the Section “Fault- and alarm messages” of the drive Instruction Manual.

6.1 CBD Alarms and faults

6.1.1 Alarms

Alarm **A081**: **DeviceNet ä idle condition warning**

A zero length PZD data telegram has been received through either the poll or bit strobe I/O message channel. The alarm will be reset when a normal length PZD data telegram is received.

Effect: The telegram is ignored. Data which was last sent remains valid. Depending on the telegram failure monitoring setting (**“CB/TB TLg OFF Time”**), fault **F082** can be initiated (DPR telegram failure).

Counter-measures:

- Check the DeviceNet™ bus master. Some PLCs will send an idle condition when they are put in the “program” mode.

Alarm **A083**: **Error warning**

Erroneous DeviceNet™ CAN messages are received or sent and the internal fault counter has exceeded the alarm limit.

Effect: The erroneous CAN messages are ignored. Data which was last sent remains valid. If it involves process data in the erroneous CAN messages, depending on the telegram failure monitoring setting (**“CB/TB TLg OFF Time”**), fault **F082** can be initiated (DPR telegram failure). There is no response in the drive if the PKW Object or other DeviceNet™ explicit messages are erroneous.

Counter-measures:

- Check and if required correct parameter **“CB parameter 10”** (baud rate) for every bus node.
- Check the cable connection between the bus nodes
- Check the cable shielding. Follow DeviceNet™ specifications.
- Replace board **CBD**

Alarm **A084**: **Bus off**

Erroneous DeviceNet™ CAN messages have been received or sent, and the internal error counter has exceeded the error limit.

Effect: The erroneous CAN messages are ignored. Data which was last sent remains valid. If it involves process data in the erroneous CAN messages, depending on the telegram failure monitoring setting (**"CB/TB TLg OFF Time"**), fault **F082** can be initiated (DPR telegram failure). There is no response in the drive if the PKW Object or other DeviceNet™ explicit messages are erroneous.

Counter-measures:

- Check and if required correct parameter **"CB parameter 10"** (baud rate) for every bus node.
- Check the DeviceNet™ bus master
- Check the cable connection between the bus nodes
- Check the cable shielding. Follow DeviceNet™ specifications.
- Replace board **CBD**

Alarms A081, A083 and A084 are additionally acquired as information and stored in alarm parameter 6 (**r958**). In this case, the individual alarms are assigned to the appropriate bits in **r958** (bit x = 1: Alarm present):

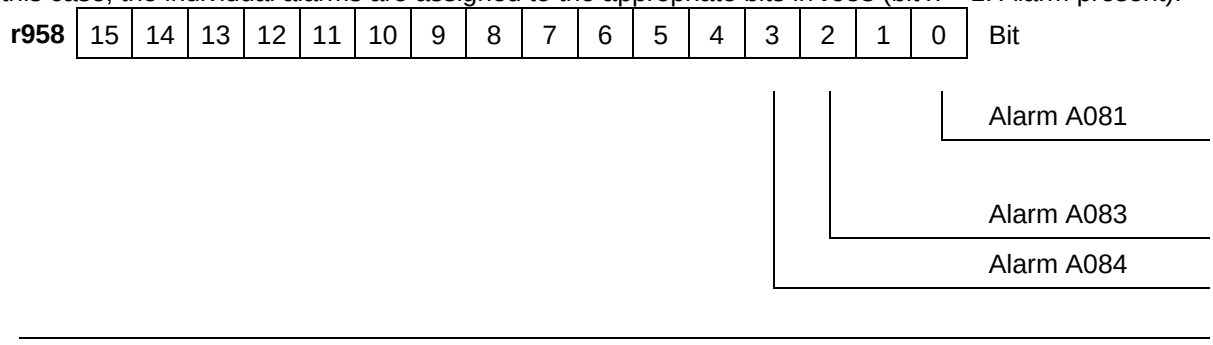

6.1.2 Fault messages

The following **fault messages** can occur with the combination of **CBD** and the control/technology board (CU/TB):

Fault **F080**: **TB/CB Init.**

When initializing and parameterizing the **CBD** via the dual port RAM interface (dual port interface) a fault/error has occurred.

Causes and counter-measures:

- For the CU2 only: **CBD** selected with parameter P090/P091, but not inserted,
  - correct parameters **P090** and **P091**
  - insert **CBD**

- Incorrect **CBD** parameterization; cause of the erroneous parameterization in the diagnostics parameter "CB/TB diagnostics" index 1 (refer to Section 6.3.1., CBD diagnostics parameter)

	CUVC & CUMC	DC-Master	CU2
"CB/TB diagnostics"	r732.1	n732.1	r731.1

  - correct CB parameter **"CB parameter 1" to "CB parameter 10"**
  - correct CB bus address **P918**

Equivalent Parameter Numbers			
	CUVC & CUMC	DC-Master	CU2
"CB parameter 1"	P711.x	U711.x	P696
"CB parameter 2"	P712.x	U712.x	P697
"CB parameter 10"	P720.x	U720.x	P705

- **CBD** defective
  - replace **CBD**

Fault **F081**: **Dual port RAM heartbeat**

The **CBD** no longer processes the heartbeat counter.

Causes and counter-measures:

- **CBD** incorrectly inserted in the electronics box,
  - check **CBD**

- **CBD** defective.
  - replace **CBD**

Fault **F082**: **Dual port RAM telegram failure**

The telegram failure monitoring time, set via parameter **"CB/TB TLg OFF Time"** has expired (also refer to section 5.2.3 "Other **CBD** relevant parameters" and to alarms A081, A083, and A084 in section 6.1.1)

	CUVC & CUMC	DC-Master	CU2
"CB/TB TLg OFF Time"	P722.x	U722.x	P695

Causes and counter-measures:

- DeviceNet™ master failed or is in "program" mode (the green LED on **CBD** remains dark)

- Cable connection between the bus nodes interrupted (the green LED on **CBD** is dark)

  - check the bus cable

- The telegram monitoring time has been set too short (the green LED on **CBD** flashes)

  - increase the parameter value in **"CB/TB TLg OFF Time"**

- **CBD** defective

  - replace **CBD**

6.2 Diagnostics

6.2.1 Diagnostic LEDs

The **CBD** has three LEDs for fast troubleshooting. Confusion is eliminated due to the different colored LEDs.

NOTE
If an LED is in a **steady state condition** (**dark** or **bright**) then this signifies that the unit is in a non-standard operating status (parameterizing phase or fault/error)! At least one LED must flash (otherwise: Voltage OFF or **CBD** defective)!

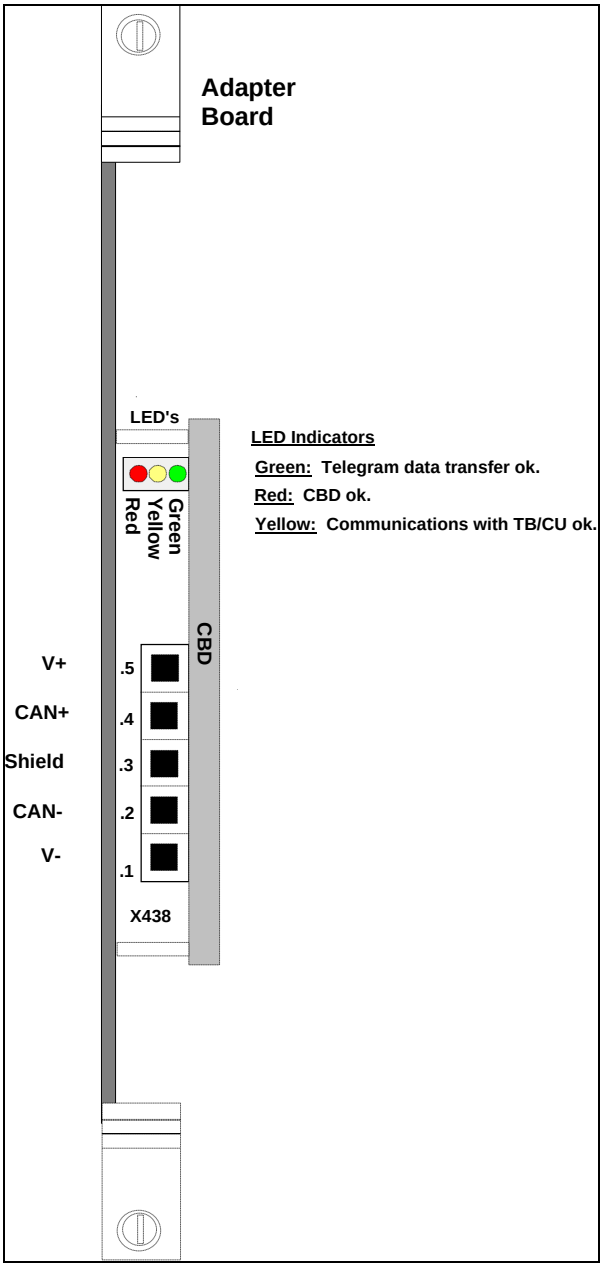

Fig. 6.1

Standard LED image for net data transfer via the DeviceNet ä bus

green	flashing	cyclic process data (PZD) transfer via the DeviceNet™ bus ok. Only flashes for PZD transfers, not PKW transfers or DeviceNet™ functions such as allocate. If the PZD update time is less than approximately 150 milliseconds, this green LED may not flash on for every cycle compared with the red and yellow LEDs.
red	flashing	**CBD** ok.
yellow	flashing	dual port RAM interface ok. (CU/TB-Heartbeat-Counter)

NOTE

Under standard operating conditions, all three LEDs are lit in the same clock cycle and for the same duration!

Fault/error, **CBD**

green	**steady light**	Fault/error cause:
red	flashing	Fatal **CBD** fault
yellow	**steady light**	(replace **CBD**)

Parameterization by the drive (CU)

green	**steady light**	**CBD** waits for the start of parameterization
red	flashing	by the **drive** (CU)
yellow	**off (dark)**	e. g. for the CU2 only: if the **CBD** is not selected (P090/P091)

green	**off (dark)**	**CBD** waits for
red	flashing	parameterization to be completed
yellow	**steady light**	by the **drive** (CU)

Online operation

green	**off (dark)**	No PZD data transfer via the DeviceNet™ bus
red	flashing	e. g. the bus connector has been withdrawn, EMC fault, interchanged connections,
yellow	flashing	node number (**P918**) is not supplied with net data via the DeviceNet™ bus.

6.2.2 CBD diagnostic parameters

CBD puts diagnostics information in a diagnostics buffer memory to support commissioning and service. The diagnostics information can be read-out using the indexed parameter **"CB/TB diagnostics"**. This parameter display is hexadecimal.

	CUVC & CUMC	DC-Master	CU2
"CB/TB diagnostics"	r732.index	n732.index	r731.index

The **CBD** diagnostics buffer is assigned as follows for **CBD**:

Significance	"CB/TB diagnostics" index
Error ID, configuring	1
DeviceNet Status	2
Counter for all telegrams received (to CBD and other devices)	3
Internally assigned	4
Internally assigned	5
Internally assigned	6
Internally assigned	7
Counter for PZD telegrams received error-free	8
Counter for bus off statuses	9
Internally assigned	10
Internally assigned	11
Internally assigned	12
Internally assigned	13
Internally assigned	14
Internally assigned	15
Internally assigned	16
Internally assigned	17
Internally assigned	18
Counter for telegrams transmitted	19
Internally assigned	20
Internally assigned	21
Internally assigned	22
Internally assigned	23
Internally assigned	24
Internally assigned	25
Software version	26
Software ID	27
Software date, day-month	28
Software date, year	29
Not used	30-32

*Table 6.1 **CBD** diagnostics buffer*

Significance of the CBD diagnostics:

"CB/TB diagnostics" index 1 (error identification configuring):

	CUVC & CUMC	DC-Master	CU2
"CB/TB diagnostics"	r732.1	n732.1	r731.1

If an invalid value or an illegal combination of parameter values is contained in the CB parameters, the drive goes into a fault condition with fault **F080** and fault value 5 (r949). The erroneous parameterization cause can be determined using this CB diagnostics parameter.

Coding:

Value (Hex)	**Significance**
00	No error
01	Incorrect DeviceNet™ MAC ID (slave address) (P918)
02	Incorrect DeviceNet™ polled I/O produced connection path ("CB parameter 1")
03	Incorrect DeviceNet™ polled I/O consumed connection path ("CB parameter 2")
04 - 16	*Internal*
17	Invalid baud rate ("CB parameter 10")
18 - 22	*Internal*
23 - 44	*Reserved*

Summary of Equivalent Parameter Numbers			
	CUVC & CUMC	DC-Master	CU2
"CB parameter 1"	P711.x	U711.x	P696
"CB parameter 2"	P712.x	U712.x	P697
"CB parameter 10"	P720.x	U720.x	P705
"CB/TB actual values"	P734.01 to P734.16	U734.01 to U734.16	P694.01 to P694.16
"CB/TB diagnostics"	r732.x	n732.x	P731.x
"CB/TB TLg OFF Time"	P722.x	U722.x	P695
"parameterizing enable"	P053	P927	P053

6.2.2.1 6.2.2.1 DeviceNet Status - parameter r731.02

"CB/TB diagnostics" index 02 (DeviceNet™ Status):

	CUVC & CUMC	DC-Master	CU2
"CB/TB diagnostics"	r732.2	n732.2	r731.2

Each hexadecimal digit contains a different status indicator.

Thousand's Digit	Hundred's Digit	Ten's Digit	One's Digit
IDLE Indicator	Channel Allocation	Reserved	Network Status LED

LED Coding for Network Status LED: (One's Digit)

Value	LED State	Indication
0	Off	Device is not on-line. ■ The device has not completed the Dup_MAC_ID test yet.
1	Flashing Green	Device is on-line but has no connection in the established state. ■ This device is not allocated to a master.
2	Solid Green	Device is on-line and has connections in the established state. ■ This device is allocated to a master.
3	Flashing Red	Not presently used.
4	Solid Red	Failed communication device. ■ This device has detected an error that has rendered it incapable of communicating on the network (Duplicate MAC ID or Bus-off). This condition can be reset only by cycling the power on the drive.

Bit Coding for Channel Allocation: (Hundred's Digit)

Bit in Digit (Bit in full word)		Indication
0	(8)	1 = Explicit Channel allocated
1	(9)	1 = I/O Poll Channel allocated
2	(10)	1 = I/O Bit Strobe Channel allocated
3	(11)	Future Use

Digit Coding for IDLE Indicator: (Thousand's Digit)

Value	Indication
0	Device is not in IDLE condition. ■ A non-zero length POLL or BIT STROBE command was the latest data received.
1	Device is in IDLE condition. Also refer to alarm A081 in section 6.1.1 ■ A zero length POLL or BIT STROBE command was the latest data received.

"CB/TB diagnostics" index 03 (counter, all telegrams received):

	CUVC & CUMC	DC-Master	CU2
"CB/TB diagnostics"	r732.3	n732.3	r731.3

Counter for DeviceNet™ telegrams which were received error-free since power-on. This counter includes all Group 2 DeviceNet™ messages, including those not directed to this CBD.

"CB/TB diagnostics" index 08 (counter, PZD receive telegrams):

	CUVC & CUMC	DC-Master	CU2
"CB/TB diagnostics"	r732.8	n732.8	r731.8

Counter for error-free received PZD DeviceNet™ telegrams since power on.

"CB/TB diagnostics" index 09 (counter, bus off):

	CUVC & CUMC	DC-Master	CU2
"CB/TB diagnostics"	r732.9	n732.9	r731.9

Counter, bus off statuses since power on (alarm A084).

"CB/TB diagnostics" index 19 (counter, PZD send DeviceNet™ telegrams):

	CUVC & CUMC	DC-Master	CU2
"CB/TB diagnostics"	r732.19	n732.19	r731.19

Counter, error-free DeviceNet™ telegrams sent since power on.

"CB/TB diagnostics" index 26 (Software version):

	CUVC & CUMC	DC-Master	CU2
"CB/TB diagnostics"	r732.26	n732.26	r731.26

Software release (in hex). Scaling is x 10. For example, 000A hex = 10 decimal ÷ 10 = 1.0

"CB/TB diagnostics" index 27 (Software identification code):

	CUVC & CUMC	DC-Master	CU2
"CB/TB diagnostics"	r732.27	n732.27	r731.27

"CB/TB diagnostics" index 28 (Software date):

	CUVC & CUMC	DC-Master	CU2
"CB/TB diagnostics"	r732.28	n732.28	r731.28

Software date, day (high byte) and month (low byte) in a hexadecimal notation

"CB/TB diagnostics" index 29 (Software date):

	CUVC & CUMC	DC-Master	CU2
"CB/TB diagnostics"	r732.29	n732.29	r731.29

Software date, year (in a hexadecimal notation)

PCB code:

	CUVC & CUMC	DC-Master	CU2
"PCB code"	r826		r723

The PCB code for the CBD is 145.

7 Appendix

7.1 Technical data

Board name	CBD (Communications Board DeviceNet™)		
Order No.	6SE7090-0XX84-0FK0		
Rated input voltage	5 V 5 %, approx. 400 mA, internally from the drive		
Operating temperature range	0 °C to +55 °C (32 °F to 131 °F)		
Storage temperature	25 °C to +70 °C (13 °F to 158 °F)		
Transport temperature	25 °C to +70 °C (13 °F to 158 °F)		
Environmental conditions climatic class: pollutant stressing:	 3K3 according to DIN IEC 721 Part 3-3 / 04.90 3C2 according to DIN IEC 721 Part 3-3 / 04.90		
Degree of pollution	2 DIN VDE 0110 Section 1/01.89. Moisture condensation not permissible		
Degree of protection	IP00 DIN VDE 0470 Section1 / 11.92 =;^ EN 60529		
Mechanical strength	DIN IEC 68-2-6 / 06.90		
	Frequency range Hz	Constant amplitude of the deflection mm	 acceleration m/s^2 (g)
for stationary applications	10 to 58	0.075	
	above 58 to 500		9.8 (1)

Table 7.1

7.2 Revision data

7.2.1 Firmware Version (viewable by parameter “CB/TB diagnostics” index 26 and through DeviceNet)

	CUVC & CUMC	DC-Master	CU2
“CB/TB diagnostics”	r732.26	n732.26	r731.26

Version 1.3

First released version

Version 1.4

There was one change in version 1.4. This change corrected a problem with the PKW data sent over the DeviceNet network. This problem would only occur if the I/O assembly for polled I/O produced connection path (“CB parameter 1”) was set to 171 (8 PZD status and actual value words) or set to 172 (16 PZD status and actual value words). With these values for “CB parameter 1”, the PKW response from the drive would normally indicate an error with the Task ID of the response PKE = 7 even for valid requests.

Notes

SIEMENS

SIMOVERT MASTERDRIVES

Operating Instructions

CBL – Communication Board CC-Link

Edition: AA

Order No.: 6SE7087-6NX84-0GB0

These Operating Instructions are valid for software release V 1.2

We reserve the right to make changes to functions, technical data, standards, drawings and parameters.

Weitergabe sowie Vervielfältigung dieser Unterlage, Verwertung und Mitteilung ihres Inhalts nicht gestattet, soweit nicht ausdrücklich zugestanden. Zuwiderhandlungen verpflichten zu Schadenersatz. Alle Rechte vorbehalten, insbesondere für den Fall der Patenterteilung oder GM-Eintragung.

Wir haben den Inhalt der Druckschrift auf Übereinstimmung mit der beschriebenen Hard- und Software überprüft. Dennoch können Abweichungen nicht ausgeschlossen werden, so daß wir für die vollständige Übereinstimmung keine Garantie übernehmen. Die Angaben in dieser Druckschrift werden jedoch regelmäßig überprüft und notwendige Korrekturen sind in den nachfolgenden Auflagen enthalten. Für Verbesserungsvorschläge sind wir dankbar

The reproduction, transmission or use of this document or its contents is not permitted without express written authority. Offenders will be liable for damages. All rights, including rights created by patent grant or registration of a utility model or design, are reserved.

We have checked the contents of this document to ensure that they coincide with the described hardware and software. However, differences cannot be completely excluded, so that we do not accept any guarantee for complete conformance. However, the information in this document is regularly checked and necessary corrections will be included in subsequent editions. We are grateful for any recommendations for improvement.

SIMOVERT® ist ein Warenzeichen von Siemens

SIMOVERT® Registered Trade Mark

© Siemens AG 1997 All rights reserved

Contents

1 DEFINITIONS AND WARNINGS 1-1

2 DESCRIPTION 2-1

2.1 Mounting methods / CBL slots 2-3
2.1.1 Mounting positions of the CBL in MC Compact Plus units 2-3
2.1.2 Mounting positions of the CBL in Compact and chassis units of MASTERDRIVES Vector Control (CUVC) and MASTERDRIVES (CUMC) 2-4

3 CONNECTING 3-1

3.1 EMC measures 3-4

4 COMMUNICATION VIA CC-LINK 4-1

4.1 CC-Link profile of SIMOVERT MASTERDRIVES 4-1

4.2 CBL, converter between CC-Link and MASTERDRIVES 4-4

4.3 Initial process and initial data setting 4-5

4.4 Setpoint handling 4-6

4.5 Monitoring 4-8

4.6 Command code execution 4-10

4.7 Parameter area (PKW) 4-11

4.8 Handling PKW via CC-Link 4-17

4.9 Data formats and data conversion 4-22

4.10 Fault reaction on communication errors 4-26

4.11 Optional flags in CBL profile 4-27

5 START-UP OF THE CBL 5-1

5.1 Basic parameterization of the units 5-1

5.2 Process-data softwiring in the units 5-6

6 DIAGNOSIS AND TROUBLESHOOTING 6-1

6.1 Evaluation of hardware diagnostics 6-1

6.2 Fault displays and alarms on the basic unit 6-7

6.3 Evaluation of the CBL diagnostic parameter 6-9

6.4 Meaning of CBL diagnostics 6-10

7 TECHNICAL DATA 7-1

8 APPENDIX 8-1

1 Definitions and Warnings

Qualified personnel

For the purpose of this documentation and the product warning labels, a "Qualified person" is someone who is familiar with the installation, mounting, start-up, operation and maintenance of the product. He or she must have the following qualifications:

- Trained or authorized to energize, de-energize, ground and tag circuits and equipment in accordance with established safety procedures.
- Trained or authorized in the proper care and use of protective equipment in accordance with established safety procedures.
- Trained in rendering first aid.

DANGER



For the purpose of this documentation and the product warning labels, "Danger" indicates death, severe personal injury or substantial property damage will result if proper precautions are not taken.

WARNING



For the purpose of this documentation and the product warning labels, "Warning" indicates death, severe personal injury or property damage can result if proper precautions are not taken.

CAUTION



For the purpose of this documentation and the product warning labels, "Caution" indicates that minor personal injury or material damage can result if proper precautions are not taken.

NOTE

For the purpose of this documentation, "Note" indicates important information about the product or about the respective part of the documentation which is essential to highlight.

WARNING



Hazardous voltages are present in this electrical equipment during operation.

Non-observance of the warnings can thus result in severe personal injury or property damage.

Only qualified personnel should work on or around the equipment

This personnel must be thoroughly familiar with all warning and maintenance procedures contained in this documentation.

The successful and safe operation of this equipment is dependent on correct transport, proper storage and installation as well as careful operation and maintenance.

NOTE

This documentation does not purport to cover all details on all types of the product, nor to provide for every possible contingency to be met in connection with installation, operation or maintenance.

Should further information be desired or should particular problems arise which are not covered sufficiently for the purchaser's purposes, the matter should be referred to the local SIEMENS sales office.

The contents of this documentation shall not become part of or modify any prior or existing agreement, commitment or relationship. The sales contract contains the entire obligation of SIEMENS AG. The warranty contained in the contract between the parties is the sole warranty of SIEMENS AG. Any statements contained herein do not create new warranties or modify the existing warranty.

CAUTION



Components which can be destroyed by electrostatic discharge (ESD)

The board contains components which can be destroyed by electrostatic discharge. These components can be easily destroyed if not carefully handled. If you have to handle electronic boards, please observe the following:

Electronic boards should only be touched when absolutely necessary.

The human body must be electrically discharged before touching an electronic board.

Boards must not come into contact with highly insulating materials - e.g. plastic parts, insulated desktops, articles of clothing manufactured from man-made fibers.

Boards must only be placed on conductive surfaces.

Boards and components should only be stored and transported in conductive packaging (e.g. metalized plastic boxes or metal containers).

If the packing material is not conductive, the boards must be wrapped with a conductive packaging material, e.g. conductive foam rubber or household aluminium foil.

The necessary ESD protective measures are clearly shown again in the following diagram:

- a = Conductive floor surface
- b = ESD table
- c = ESD shoes
- d = ESD overall
- e = ESD chain
- f = Cubicle ground connection

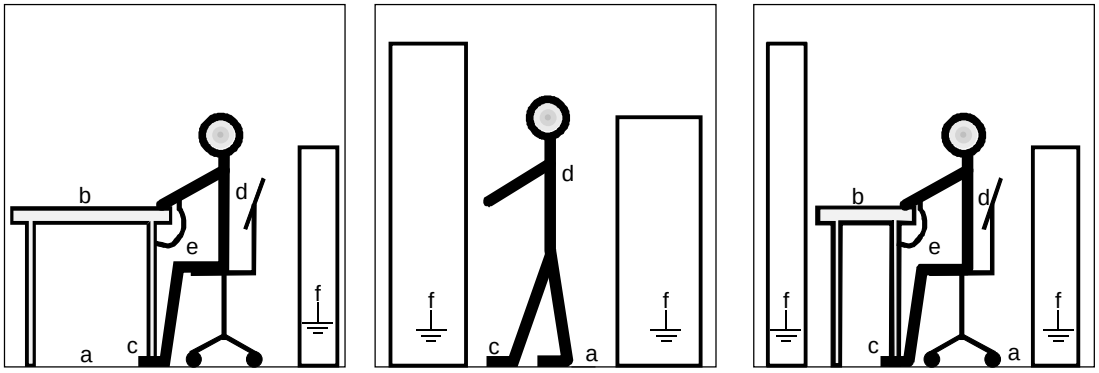

Sitting **Standing** **Standing / Sitting**

Fig. 1-1 ESD protective measures

2 Description

The optional CBL board (Communication Board CC-Link) is used for connecting drives to programmable logic controllers (PLCs) from Mitsubishi via net protocol CC-Link.

View

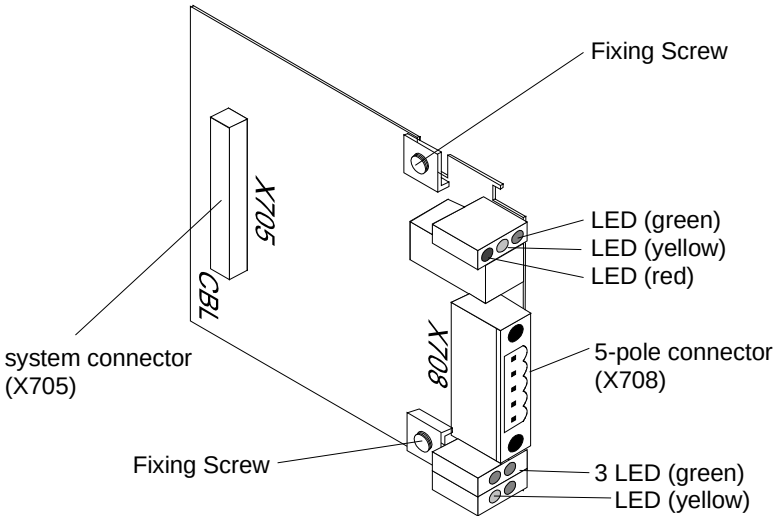

Fig. 2-1 View of the optional CBL board

Technical information

The optional board has three LEDs (green, yellow and red) for providing information on the current operating status and four LEDs about the status of CC-Link.

Power is supplied by the basic unit.

The CBL can be simply plugged into the electronics box of the converter and works with all software and hardware configurations of the MASTERDRIVES.

The CBL has a 5-pole open connector (X708) which is provided for connecting it to the CC-Link bus.

CC-Link from Mitsubishi

CC-Link is a field network developed by Mitsubishi Electric Corporation. CC-Link is the abbreviation for "Control & Communication Link". From programmable logic controllers (PLCs) you can communicate with peripheral products like sensors, valves, inverters, etc.

At CC-Link there is one master and up to 64 slaves. The master has address 0 and the slaves 1..64. CC-Link has a bus topology. The communication speed can be set between 156 kBits/sec and 10 Mbits/sec. Depending on the transmission speed you have different maximum bus length; see chapter 5 "Start-up of the CBL" (P711).

At CC-Link there are different data volumes and data types: bit control, data control and messages (send/receive). These different data types are realized with three types of devices:

- Remote IO device station
- Remote device station
- Intelligent device station

The different data volumes are realized at the remote device station by occupying multiple (up to 4) slave addresses.

With the communication board CBL you can communicate from Mitsubishi PLCs to SIMOVERT MASTERDRIVES systems. You can control drives by setpoints of frequency or torque.

CBL	**CC-Link parameter:** **Remote device station** **1 station occupied** **CC-Link standard profile for inverters** Vendor code: 0159h (Siemens AG)

At CC-Link there are restrictions for configuring the network. The following conditions must be satisfied:

$\{(1 \times a) + (2 \times b) + (3 \times c) + (4 \times d)\} \leq 64$

with a: Number of units occupying 1 station (like CBL)
b: Number of units occupying 2 stations
c: Number of units occupying 3 stations
d: Number of units occupying 4 stations

$\{(16 \times A) + (54 \times B) + (88 \times C)\} \leq 2304$

with A: Number of remote I/O stations (≤ 64)
B: Number of remote device stations (≤ 42)
C: Number of intelligent stations (≤ 26)

⇨ Maximum number of CBLs connected: 42

2.1 Mounting methods / CBL slots

NOTE

The CBL can be directly mounted into Compact PLUS units. For all other frame sizes, it is mounted on the CUMC or CUVC or connected in the electronics box with an adapter board.

2.1.1 Mounting positions of the CBL in MC Compact Plus units

NOTE

In principle, the optional CBL board (Communications Board CC-Link) can be mounted in any slot. Please bear in mind, however, that an encoder board always requires Slot C.

Position of the slots

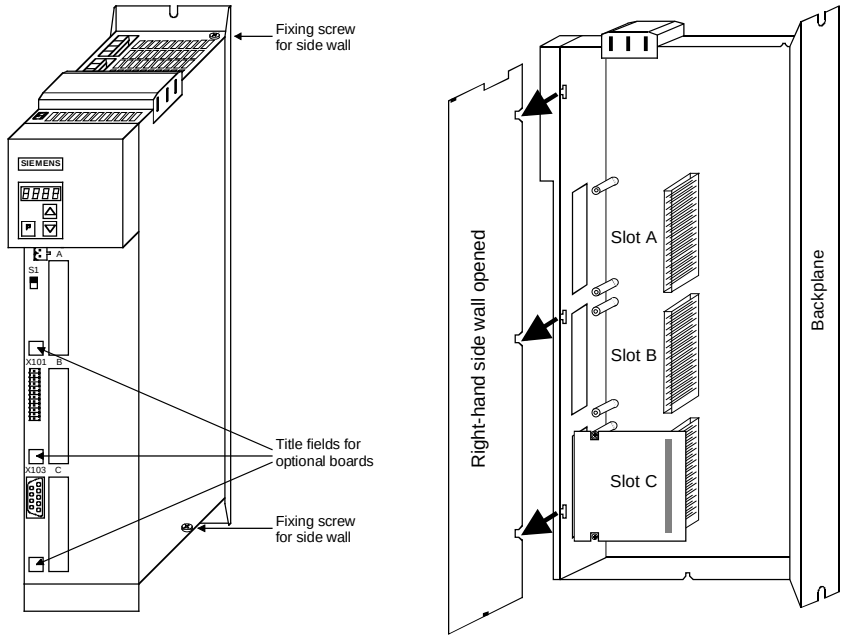

Fig. 2-2 Position of the slots (right-hand-side side wall removed)

WARNING



Because of the DC link capacitors, there continues to be dangerous voltage in the unit until up to 5 minutes after disconnection. Therefore the unit must not opened until at least this time has expired.

2.1.2 Mounting positions of the CBL in Compact and chassis units of MASTERDRIVES VectorControl (CUVC) and MASTERDRIVES (CUMC)

Slots

In the electronics box of the compact-type and chassis-type converters and inverters, there are up to six slots available for installing an optional board. The slots are marked with the letters A to G. Slot B is not present in these types of unit; it is used in Compact PLUS units.

If you wish to use Slots D to G, you must first mount the LBA (Local Bus Adapter) and the corresponding adapter board.

NOTE

In principle, you can operate the optional CBL board (Communication Board CC-Link) in any slot. Please bear in mind, however, that an encoder board always needs Slot C and that the LBA requires the slots to be used in a particular sequence.

The CBL can be mounted on the adapter board in both slots, i.e. TOP and/or BOTTOM.

Position of the slots

The slots are located in the following positions:

- Slot A CU board Top
- Slot C CU board Bottom
- Slot D Adapter board in mounting pos. 2 Top
- Slot E Adapter board in mounting pos. 2 Bottom
- Slot F Adapter board in mounting pos. 3 Top
- Slot G Adapter board in mounting pos. 3 Bottom

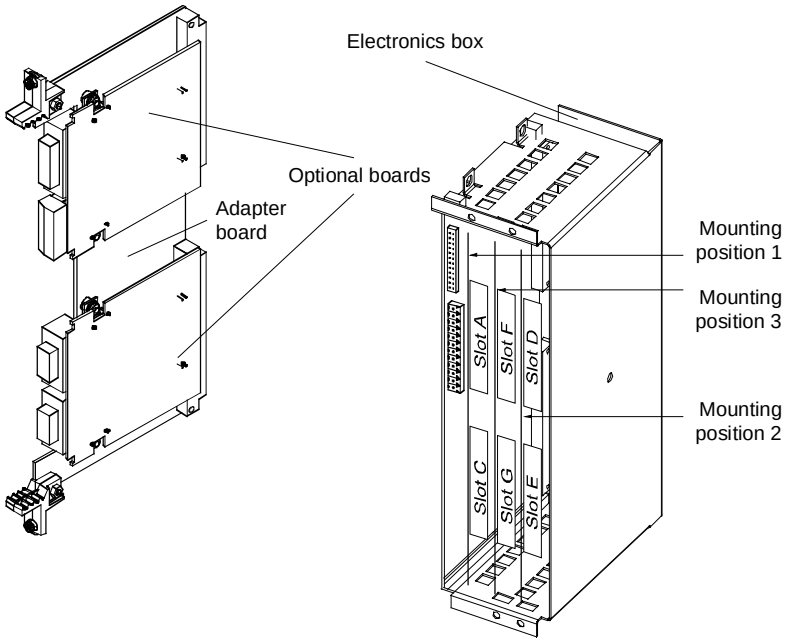

Fig. 2-3 Adapter board with optional boards and position of the slots for compact and chassis units

WARNING



Because of the DC link capacitors, there continues to be dangerous voltage in the unit until up to 5 minutes after disconnection. Therefore the unit must not opened until at least this time has expired.

Due to the technical structure of the LBA, certain sequences are stipulated for use of the slots.

If only one adapter board with optional boards is inserted into the electronics box, it always must be plugged into mounting position 2.

If a T100 / T300 or T400 technology board is plugged into the electronics box in addition to the adapter board with CBL, the technology board must be plugged into mounting position 2. In this case, the CBL is plugged into mounting position 3.

3 Connecting

WARNING



The SIMOVERT MASTERDRIVES are operated with high voltages. Any work on the unit may only be carried out by qualified personnel. If this warning is ignored, serious injury or considerable damage to property can occur as a consequence.

Because of the DC link capacitors, there continues to be dangerous voltage in the unit until up to 5 minutes after disconnection. Therefore the unit must not opened until at least this time has expired.

Even when the motor is at a standstill, the power terminals and the control terminals can carry voltage. During work on the converter, it has to be disconnected from the power supply.

When handling the opened converter, it must be kept in mind that live components are exposed.

CAUTION



The CBL contains electrostatically sensitive components. These components can very easily be destroyed by improper handling.

Connection of the bus cable

X708

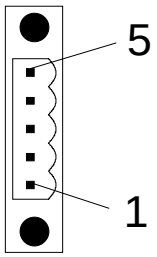

The CBL optional board has a 5-pin open connector (X708) which is provided for connecting it up to the CC-Link bus.

Pin	Designation	Significance	Cable
1	DA	Data noninverted	Blue
2	DB	Data inverted	White
3	DG	Data ground	Yellow
4	SLD	Cable shield	Shield
5	FG	Field ground (additional)	

Table 3-1 Connections X708

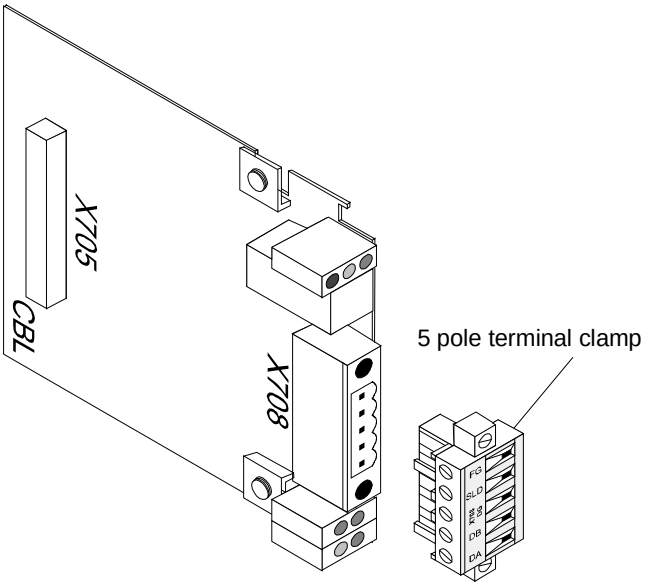

Fig. 3-1 CBL with 5 pole terminal clamp

With the communication board CBL a 5 pole terminal clamp is supplied. It is used to connect the CBL to the CC-Link cable. You can also order only the terminal clamp (order number 4 SE.000 001.0088.47).

For the CC-Link bus use the cable type specified by Mitsubishi.

Item	Specification	
Model	**FANC-SB 0.5 mm² x 3**	**FANC-SBH 0.5 mm² x 3**
Cable type	Shielded twisted cable	
Conductor sectional area	0.5 mm²	
Conductor resistance (20 °C)	37,8 Ω / km or less	
Insulation resistance	10000 Ω/km or more	
Withstanding voltage	500 VDC, 1 minute	
Capacitance (1 kHz)	60 nF / km or less	
Characteristic impedance (1 MHz)	100 Ω ± 15 Ω	
Cross section	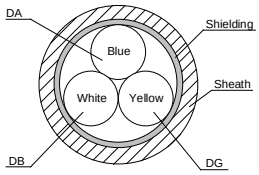	
Outline dimension	7 mm	
Approx. Weight	65 kg / km	
Using terminating resistor	110 Ω	130 Ω

Table 3-2 CC-Link cable specification

Mitsubishi specifies a maximum cable length depending on the data transfer rate. For more detailed information refer to documentation of CC-Link by Mitsubishi.

Data transfer rate	Total bus distance
10 MBit/s	100 m
5 Mbit/s	150 m
2.5 MBit/s	200 m
625 kBit/s	600 m
156 kBit/s	1200 m

Table 3-3 Cable length in relation to the baud rate

Mounting the bus cable

For fault-free operation of the CC-Link bus, the bus cable must be terminated with resistors 110 Ω or 130 Ω (depending on cable type; refer to Table 3-2) at both ends.

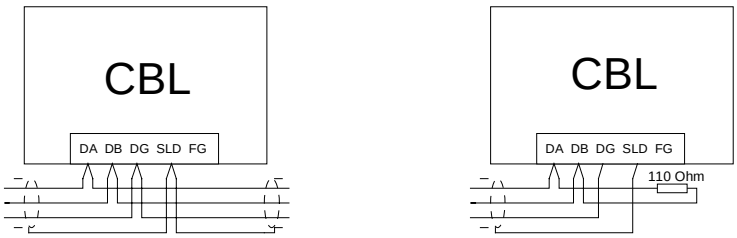

Fig. 3-2 CBL connected to CC-Link (in the middle of the bus / at the end of the bus)

NOTES

- When stripping off the insulation of the shield, make sure that the shield is not damaged!
- When stripping off the insulation of the core ends, make sure that the copper core is not damaged!
- Use terminal resistors 110 Ω or 130 Ω (depending on cable type; refer to Table 3-2) at both ends of the CC-Link network. If CBL is placed at the end of CC-Link bus, connect the resistor with the clamp terminals DA and DB and fix them.
- Fix the terminal clamp connector with the two screws at CBL.
- The pins SLD and FG are connected to field ground by the fixing screws of the CBL. Look into the chapter "EMC measures" for right shielding! The connector FG is an additional point to connect to field ground.
- The shield of the cable must be connected to the inverter housing.

3.1 EMC measures

For fault-free CC-Link operation, the following measures are necessary:

1. Shielding

NOTE

The bus cables must be twisted and shielded (refer to the definition of Mitsubishi) and are to be routed separately from power cables, the minimum clearance has to be 20 cm. The shield must be connected through the largest possible surface area on both sides, i.e. the shield of the bus cable between 2 converters must be connected to the converter housing at **both** ends.

If bus and power cables intersect, they must cross at an angle of 90 °.

Attaching the shield with the help of shield clamps:
The shield of the bus cable can be attached to the converter housing with the help of shield clamps (Compact units) or shield clamps and cable ties (chassis units). How to use the shield clamps is shown in Fig. 3-3 and Fig. 3-4.

Attaching the shield also to the pin SLD of CBL.

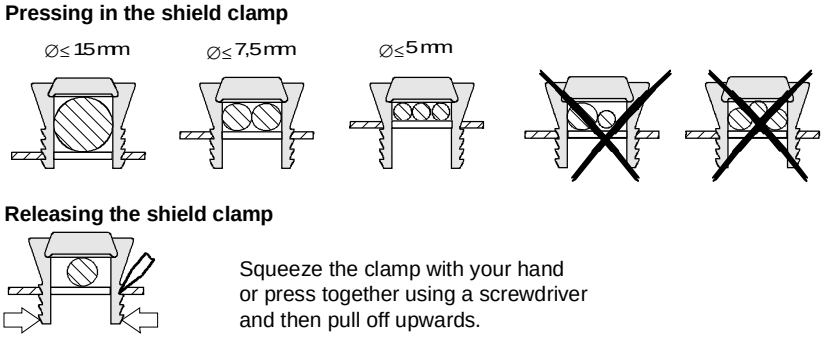

Fig. 3-3 Using the shield clamps

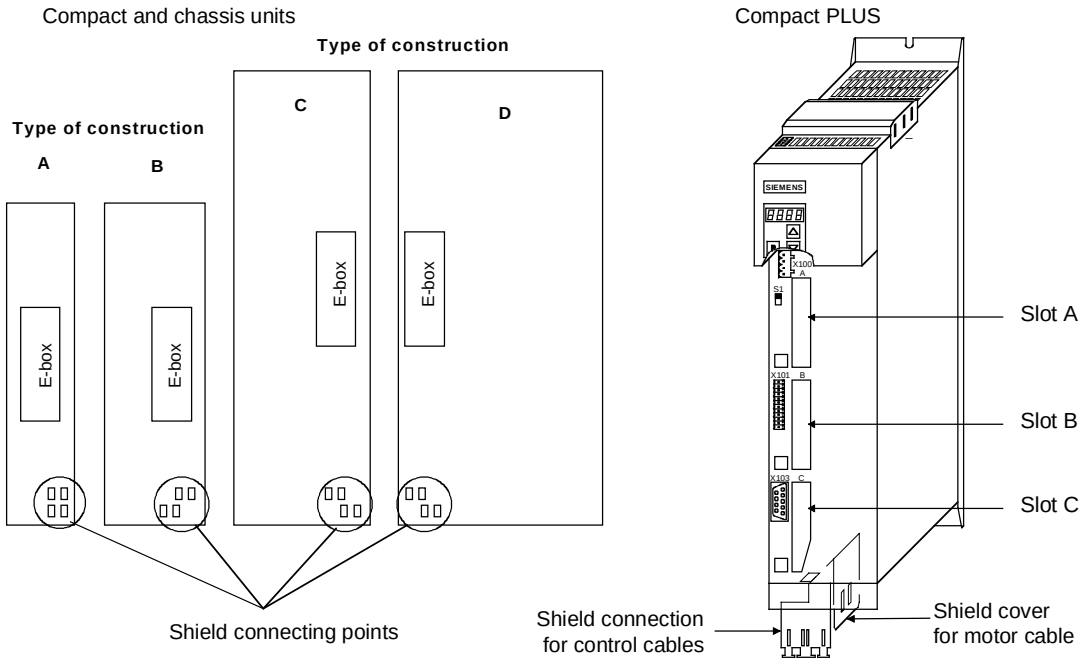

Fig. 3-4 Position of the shield-connection points

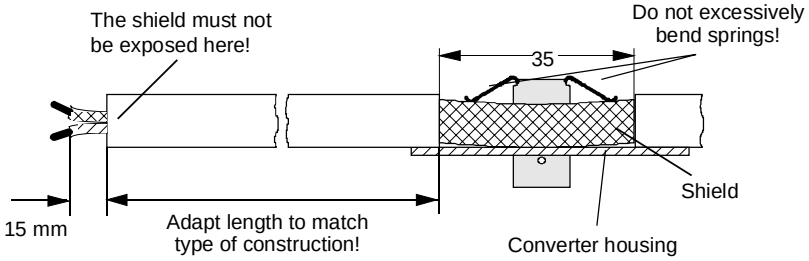

Fig. 3-5 Removing insulation from the cable when shield clamps are used

2. Equipotential bonding

Please avoid differences in potential (e.g. due to different supply levels) between the converters and the CC-Link master:

- Use equipotential bonding cables:
  - 16 mm^2 Cu for equipotential bonding cables up to 200 m
  - 25 mm^2 Cu for equipotential bonding cables over 200 m
- Lay the equipotential bonding cables so that there is the smallest possible surface area between the equipotential bonding cable and signal cables.
- Connect equipotential bonding conductors to the earth/protective conductor through the largest possible surface area.

3. Laying cables

Please comply with the following instructions when laying cables:

- Do not lay bus cables (signal cables) directly parallel to power cables.
- Lay signal cables and the associated equipotential bonding cables with the lowest possible distance between them and on the shortest routes.
- Lay power cables and signal cables in separate cable ducts.
- Attach shields through a large surface area.

4 Communication via CC-Link

4.1 CC-Link profile of SIMOVERT MASTERDRIVES

CC-Link profile for inverters

At CC-Link there are standard profiles for inverters, displays, analog/digital converters, etc. CBL confirms to the profile for inverters. The standard profile for inverters has 32 I/O control and status bits and 4 registers with 16 bit data.

I/O bit structure

Master -> Remote		Remote -> Master	
Device No.	**Signal name**	**Device No.**	**Signal name**
RYn0	Forward command (STF)	RXn0	Forward operation
RYn1	Reverse command (STR)	RXn1	Reverse operation
RYn2	High speed (RH)	RXn2	Running (RUN)
RYn3	Medium speed (RM)	RXn3	Frequency reached (SU)
RYn4	Low speed (RL)	RXn4	Overload (OL)
RYn5	JOG 1 mode (JOG1)	RXn5	Momentary power failure(IPF)
RYn6	Second Acceleration/decel. time Selection (RT)	RXn6	Frequency detection (FU)
RYn7	JOG 2 mode (JOG2)	RXn7	Abnormal (ABC)
RYn8	Option flag 27 (F27)	RXn8	Info flag 0 (I0)
RYn9	Output stop (MRS)	RXn9	Info flag 7 (I7)
RYnA	Option flag 28 (F28)	RXnA	Info flag 15 (I15)
RYnB	Option flag 29 (F29)	RXnB	Unused
RYnC	Monitor command	RXnC	Monitoring
RYnD	Frequency set command (RAM)	RXnD	Frequency setting complete (RAM)
RYnE	not used	RXnE	not used
RYnF	Command code execution request	RXnF	Command code execution complete
RY(n+1)0	Reserved	RX(n+1)0	Reserved
RY(n+1)1		RX(n+1)1	
RY(n+1)2		RX(n+1)2	
RY(n+1)3		RX(n+1)3	
RY(n+1)4		RX(n+1)4	
RY(n+1)5		RX(n+1)5	
RY(n+1)6		RX(n+1)6	
RY(n+1)7		RX(n+1)7	
RY(n+1)8	Initial data processing complete flag	RX(n+1)8	Initial data processing request flag
RY(n+1)9	Initial data setting request flag	RX(n+1)9	Initial data setting complete flag
RY(n+1)A	Error reset request flag	RX(n+1)A	Error status flag
RY(n+1)B	Vacancy	RX(n+1)B	Remote ready
RY(n+1)C	Reserved	RX(n+1)C	Reserved
RY(n+1)D		RX(n+1)D	
RY(n+1)E	(Reserved: QnA)	RX(n+1)E	(Reserved: QnA)
RY(n+1)F		RX(n+1)F	

Register word structure

Master -> Remote		Remote -> Master	
Device No.	**Description**	**Device No.**	**Description**
RWwm	Monitor Code	RWrm	Monitor value
RWwm+1	Set Frequency	RWrm+1	Actual frequency
RWwm+2	Command code	RWrm+2	Reply Code
RWwm+3	Written data	RWrm+3	Read Data

Table 4-1 CC-Link Profile CBL

CC-Link I/O control and status bits

Device No	Bit name	Description
RYn0	Forward command (STF)	OFF: Stop command (with STR = OFF) ON: Forward command **Note: edge sensitive signal (0-1-transition for starting drive)**
RYn1	Reverse command (STR)	OFF: Stop command (with STF = OFF) ON: Reverse command **Note: edge sensitive signal (0-1-transition for starting drive)**
RYn2	High speed (RH)	Fixed setpoint high (refer to parameter P404)
RYn3	Medium speed (RM)	Fixed setpoint medium (refer to parameter P403)
RYn4	Low speed (RL)	Fixed setpoint low (refer to parameter P402)
RYn5	JOG1 mode (JOG1)	Activates JOG mode; speed and direction controlled by signed integer parameter "JOG Setpoint 1" (in percent); refer to function diagram at converter documentation.
RYn6	Second Acceleration/decel. time Selection (RT)	Selects the data sets with index 1 (RT = 0) or index 2 (RT = 1); here the user can switch between to data sets (FDS 1 and 2). This sets contain more than acceleration and decel. time; refer to converter documentation about "function data set"
RYn7	JOG2 mode (JOG2)	Activates JOG mode; speed and direction controlled by signed integer parameter "JOG Setpoint 2" (in percent); refer to function diagram at converter documentation.
RYn8	Option flag 27 (F27)	Additional control bit; refer to chapter 4.11 "Optional flags in CBL profile"
RYn9	Output stop (MRS)	ON: Output halt MRS is inverted and routed to OFF2 in control word 1
RYnA	Option flag 28 (F28)	Additional control bit; refer to chapter 4.11 "Optional flags in CBL profile"
RYnB	Option flag 29 (F29)	Additional control bit; refer to chapter 4.11 "Optional flags in CBL profile"
RynC	Monitor command	When the monitor command is turned ON, the monitor value is set in the remote register (RWrm) and the monitoring (RXnC) becomes ON. The monitor value is constantly changed during ON. Refer to chapter 4.5 "Monitoring"
RynD	Frequency set command (RAM)	When the frequency set command is turned ON, the frequency (RWwm+1) is written to the inverter. When the write is completed, the frequency setting complete (RXnD) turns ON. Refer to chapter 4.4 "Setpoint handling"
RynF	Command code execution request	When the command code execution request is turned ON, the process corresponding to the command code (RWwm2) is executed. The command code execution complete (RXnF) turns on after the command code execution is completed. If a command code execution error occurs, a value ≥8000h is set as the reply code (RWrm2). Refer to chapter 4.6 "Command code execution"
RY (n+1)8	Initial data processing complete flag	When the initial data processing is requested (RX(n+1)8) from CBL after power-on or new initializing, you have to acknowledge (ON) after initial processing is completed. Refer to chapter 4.3 "Initial process and initial data setting"
RY (n+1)9	Initial data setting request flag	If you want to reset the CBL interface turn ON. The initial data setting complete (RX(n+1)9 turns ON after resetting is finished. Refer to chapter 4.3 "Initial process and initial data setting"
RY (n+1)A	Error reset request flag	When the error reset request flag is turned ON, the error status flag (RX(n+1)A) is turned OFF. **Note: edge sensitive signal (0-1-transition for resetting)** Refer to chapter 4.3 "Initial process and initial data setting"

Device No	Signal name	Description
RXn0	Forward operation	OFF: Other than forward operation ON: Forward operation
RXn1	Reverse operation	OFF: Other than reverse operation ON: Reverse operation
RXn2	Running (RUN)	ON during the inverter operation
RXn3	Frequency reached (SU)	ON when output frequency is in the set frequency ± permission deviation; refer to function diagram 480 and status word bit 8
RXn4	Overload (OL)	ON when inverter overload warning is active; refer to status word bit 22
RXn5	Momentary power failure (IPF)	ON when momentary power failure occurs; refer to status word bit 11 "Low voltage fault"
RXn6	Frequency detection (FU)	ON when comparison value is reached; refer to function diagram 480 and status word bit 10
RXn7	Abnormal (ABC)	ON when inverter protection function is activated and the output stopped.
RXn8	Info flag 0 (I0)	Additional info flag: Status word bit 0 "Ready to switch on" Refer to chapter 4.11 "Optional flags in CBL profile"
RXn9	Info flag 7 (I7)	Additional info flag: Status word bit 7 "Warning active" Refer to chapter 4.11 "Optional flags in CBL profile"
RXnA	Info flag 15 (I15)	Additional info flag: Status word bit 15 Refer to chapter 4.11 "Optional flags in CBL profile"
RXnC	Monitoring	ON when the monitor value is set in RWrm while the monitor command (RYnC) is ON. It turns OFF when the monitor command (RYnC) is turned OFF. Refer to chapter 4.5 "Monitoring"
RXnD	Frequency setting complete (RAM)	ON when frequency is written to the inverter while frequency set command (RYnD) is ON. It turns OFF when the frequency set command (RYnD) is turned OFF. Refer to chapter 4.4 "Setpoint handling"
RXnF	Command code execution complete	ON when process corresponding to command code (RWwm+2) is executed and completed by turning ON the command code execution request (RYnF). It turns OFF when the command code execution request (RYnF) is turned OFF. Refer to chapter 4.6 "Command code execution"
RX (n+1)8	Initial data processing request flag	After power-on or new initializing the initial data processing request flag is turned on by CBL. Refer to chapter 4.3 "Initial process and initial data setting"
RX (n+1)9	Initial data setting complete flag	When the initial data setting request (RY(n+1)9 is ON) is issued, it turns ON after initial data setting is completed. Refer to chapter 4.3 "Initial process and initial data setting"
RX (n+1)A	Error status flag	ON when the inverter has an error. Refer to chapter 4.3 "Initial process and initial data setting"
RX (n+1)B	Remote ready	ON after initial process or initial data setting. OFF during error status is ON; Refer to chapter 4.3 "Initial process and initial data setting"

Table 4-2 CC-Link Profile CBL: Bit definition

4.2 CBL, converter between CC-Link and MASTERDRIVES

CBL converts the CC-Link profile for inverter to the data structure of SIMOVERT MASTERDRIVES.

It converts the control bits (remote IO bits RYn....) to the bits of the control word from the converter. In other direction the bits of the status word are translated to the remote IO bits RXn... . Chapter "Appendix" describes the rules of bit generation.

The CBL also transports the reference values (setpoint) and the actual values (incl. monitoring) between CC-Link interface and the dual port RAM interface of the MASTERDRIVES. CBL translates between the different data formats by calculating with scaling factors.

The handling of parameters at CC-Link by **Command code execution** is transformed to the PKW task handling with PKW request and reply of MASTERDRIVES.

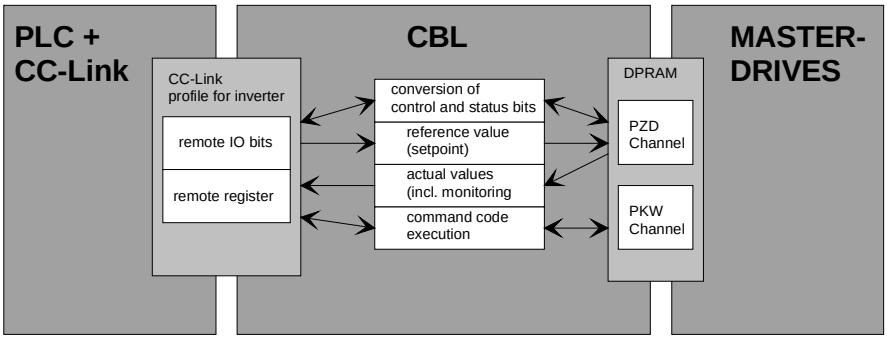

Fig. 4-1 CBL converting between CC-Link and MASTERDRIVES

4.3 Initial process and initial data setting

Initial process

Initial process is used by CBL to show the user a power-up of the converter or a re-initializing of CBL. The user has to acknowledge this request with the complete flag.

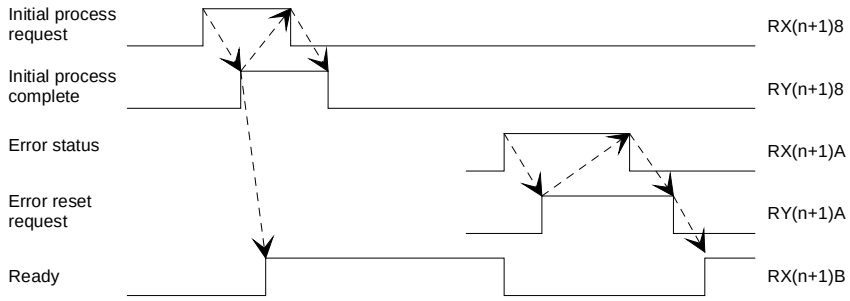

Fig. 4-2 Initial process sequence (incl. error handling)

Error status and error handling

If an error occurs in the converter the status bit **error status** (RX(n+1)A is activated. Bit **Remote Ready** (RX(n+1)B goes inactive. By activating control bit **error reset request** (RY(n+1)A you can reset the error status. This bit is edge sensitive! A 0-1-transition clears the error status. If the fault in the converter is still active, the error status can't be cleared!

Initial data setting

Initial data setting is used by the PLC program to reset the CBL interface to CC-Link. Setpoints (written to converter by **frequency set command**) will be cleared also with this sequence.



Fig. 4-3 Initial data setting sequence

NOTE

With **Initial data setting** you can't reset the converter. You only clear the CC-Link interface!

NOTE

If drive is controlled with fixed setpoints and the control bits STF or STR and RL, RM or RH are still be set after **Iniital data setting**, drive will start immediately! Using **Initial data setting** sequence these important control bits has to be cleared by the user!

4.4 Setpoint handling

Regulation of frequency or torque

With SIMOVERT MASTERDRIVES converters there are several possibilities to control a drive. In systems with CC-Link the drive can be controlled by frequency setpoints or torque setpoints.

In the following sections there is the description how to handle the CBL for controlling the drive with frequency setpoints. It is also valid for torque control. Different handling is specially noted.

For more information about the possibilities of controlling and regulating refer to converter documentation.

Handling setpoints

Giving setpoints from the PLC is possible in two ways:

- Working with fixed setpoints selected by control bits RL, RM and RH. The fixed setpoints are stored in the fixed setpoint buffer of the converter. They can parameterized from the panel of the converter (PMU) or from PLC via CC-Link.
- Working with variable setpoints. They will be set with the **frequency set command**.

In the converter you can select (softwiring) one of the different sources by the parameter P443 **Source main setpoint**. Refer to documentation of converter; function diagram 316.
At regulation of torque use P486; refer to documentation of converter; function diagram 320.

Example:

1) working with fixed setpoints RL, RM, RH:
   => P443 = 0040 Set frequency value from fixed setpoint buffer.

2) working with variable setpoints by **frequency set command**:
   => P443 = 3002 Set frequency value from first CBL to **Source main setpoint**.

The different data formats for handling setpoints will be discribed in chapter 4.9, "Data formats and data conversion".

The drive is started by activating control bit STF (RYn0: forward) or STR (RYn1: reverse).

Frequency set command

The **frequency set command** is initiated by the user. First he writes the new setpoint into register **set frequency** (RWwm+1). Second he activates the command with the control bit **frequency set command request** (RYnD). After the CBL has written the new value to the converter it acknowledges with **frequency setting complete** (RXnD).

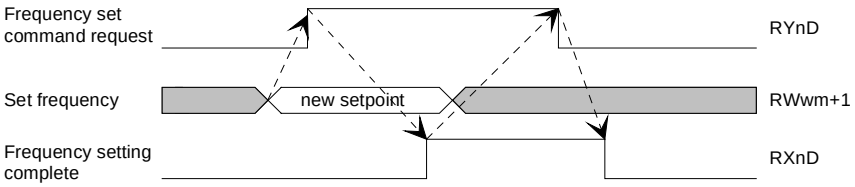

Fig. 4-4 Frequency set command sequence

Check, that P443 **Source main setpoint** is set to communication board PZD2 (first CBL => 3002)!

Fixed Setpoints with RL, RM, RH

With RL, RM and RH you have 3 selectable fixed setpoints. You have to parameterize the fixed setpoint buffer:

fixed setpoint (1) =>	P401 = 0000	"speed 0"
fixed setpoint (2) =>	P402 = xxxx	"speed RL = xxxx"
fixed setpoint (3) =>	P403 = yyyy	"speed RM = yyyy"
fixed setpoint (4) =>	P404 = zzzz	"speed RH = zzzz"

After you have selected P443 = 0040 (**Source main setpoint = fixed setpoint buffer***)* you can control the speed by the control bits RL, RM and RH. If you activate more than one bit of them, the lower speed has the higher priority. The control bits JOG1 (RYn5) and JOG2 (Ryn7) have higher priority than RL, RM and RH.

Priority:	**High <= JOG RL RM RH => Low**

Controlling drive with JOG1 and JOG2

The JOG function can be activated by control bits JOG1 (RYn5) or JOG2 (RYn7). JOG1 is assigned to "JOG setpoint 1" and JOG2 is assigned to "JOG setpoint 2" of the converter; refer to its documentation. The JOG setpoints in the converter are signed integer values in percent; so speed and direction at JOG mode can be handled by the user.

NOTE

Don’t use STF and STR to control direction at JOG mode! Refer to function diagrams of converter.

4.5 Monitoring

With the monitoring command you can get a selectable actual value of the process. First select one process value by writing selection number into register **monitor code** (RWwm). Second you activate monitoring with **monitor command** (RYnC). While this bit is active and the CBL acknowledges with bit **monitoring** (RXnC), you get actual values in register **monitoring value** (RWrm). You can change the **monitor code** during **monitoring command** is active. But attention, you don't know at which time you get actual values from the new selected process value! Better you close the monitoring sequence, change the **monitor code** and start a new sequence.

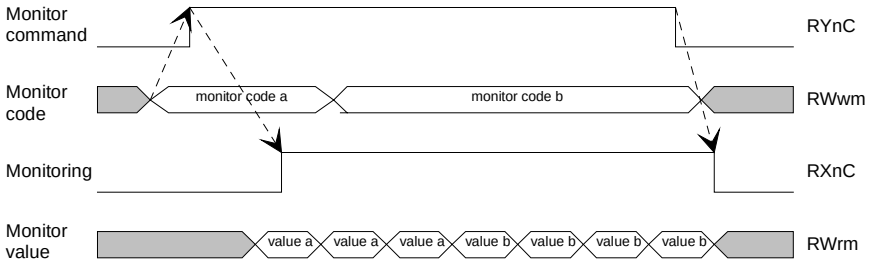

Fig. 4-5 Monitor command sequence

If you write an invalid value into **monitor code** you get 0000 in **monitor value**.

Monitoring code	Description	According scaling parameter	Precision of Mitsubishi data format (1 digit)
0000h	{ Monitor value is 0000 }	-	
0001h	Output frequency	P717	0.01 Hz
0002h	Output current	P715	0.01 A
0003h	Output voltage	P716	0.1 V
0004h	{ Monitor value is 0000 }	-	
0005h	Frequency set value	P717	0.01 Hz
0006h	Operating speed	P718	1 rotation/min
0007h	Motor torque	-	0.1 %
000Fh	Input terminal status	-	-
0010h	Output terminal status	-	-
8001h	Optional actual value 1	-	MASTERDRIVES format
8002h	Optional actual value 2	-	MASTERDRIVES format
8003h	Optional actual value 3	-	MASTERDRIVES format
8004h	Optional actual value 4	-	MASTERDRIVES format
8005h	Optional actual value 5	-	MASTERDRIVES format
8006h	Optional actual value 6	-	MASTERDRIVES format
8007h	Optional actual value 7	-	MASTERDRIVES format
8008h	Optional actual value 8	-	MASTERDRIVES format

Table 4-3 Monitor code

The monitoring values can be read in Mitsubishi inverter data format or MASTERDRIVES data format (signed or unsigned); refer to chapter 4.9, "Data formats and data conversion". You select your data format by the parameters P715 till P718.

The monitor values with **monitor code** ≤ 0007 can be handled in both data formats (depending on according scaling). The monitor values with **monitor code** ≥ 8001 are not converted. They have the original MASTERDRIVES data format.

The monitor code 000Fh and 0010h shows some of the control bits (remote IO bits):

Monitor Code 000Fh: **input terminal status**

Bit 15 Bit 9	Bit 8	Bit 7	Bit 6	Bit 5	Bit 4	Bit 3	Bit 2	Bit 1	Bit 0
0000.000	**MRS**	**JOG**	**RH**	**RM**	**RL**	**RT**	**0**	**STR**	**STF**

Bit 7 **JOG** is set if **JOG1** (RYn5) or **JOG2** (RYn7) is activated.

Monitor Code 0010h: **output terminal status**

Bit 15 Bit 5	Bit 4	Bit 3	Bit 2	Bit 1	Bit 0
0000.0000.000	**FU**	**OL**	**IPF**	**SU**	**RUN**

4.6 Command code execution

Command code execution

With the command execution sequence you can read and change the parameters of the converter. The CBL converts the **Command code execution** into a PKW mechanism of the MASTERDRIVES converter. This conversion needs a sequence of **command code execution** which is described in next chapters.

The parameters are explained in the documentation of the converter and the communication parameters of CBL in chapter 5 "Start-up of the CBL".

A single command execution sequence is started by the user by writing a **command code** in RWwm+2. To change, the new value of the parameter is written into **written data** (RWwm+3). After that the sequence is activated with the control bit **command code execution request**. After CBL has handled the command it acknowledges by writing a **reply code** (RMrm+2) and **read data** (RMrm+3) and then activating **command code execution complete**.

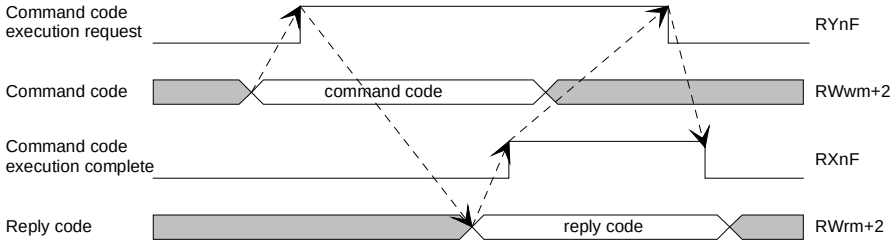

Fig. 4-6 Command code execution sequence

The CBL handles the PKW mechanism with two 4-word-structures (16 bit words):

PKW request structure

PKE	INDEX	PWE1	PWE2

PKW reply structure

PKE	INDEX	PWE1	PWE2

The next chapters explains:
Chapter 4.7 "Parameter area (PKW)" explains you how the PKW mechanism works.

Chapter 4.8 "Handling PKW via CC-Link" tells you how you can read or change parameters.

4.7 Parameter area (PKW)

With the PKW mechanism, you can perform the following tasks:

- reading parameters
- writing parameters
- reading the parameter description (parameter type, max./min. value, etc.)

The parameter area is always composed of 4 words.

1st word

Parameter ID (PKE)															
Byte 1								Byte 0							
Bit No.:	15	14	13	12	11	10	9	8	7	6	5	4	3	2	1	0
AK					SPM	PNU										

2nd word

Parameter index (IND)															
Byte 3								Byte 2							
Bit No.:	15	14	13	12	11	10	9	8	7	6	5	4	3	2	1	0
Optional features								Index							

Parameter value (PWE)															
3rd word: Byte 5								Byte 4							
Parameter value **Low** (PWE1)															
4th word: Byte 7								Byte 6							
Parameter value **High** (PWE2)															

AK: Task or reply ID
SPM: Toggle bit for processing the parameter change report (not supported by the CBL)
PNU: Parameter number

Parameter ID (PKE)

The parameter ID (PKE) is **always** a 16-bit value.

Bits 0 to 10 (PNU) contain the number of the required parameter. The meaning of the parameters can be found in the section, "Parameter list", of the converter operating instructions.

Bit 11 (SPM) is the toggle bit for parameter change reports.

NOTE

Parameter change reports are not supported by the CBL.

Bits 12 to 15 (AK) contain the task reply ID.

The meaning of the task ID for the task telegram (master → converter) is shown in Table 4-4. It corresponds to the specifications in the "PROFIBUS profile for variable-speed drives". Task IDs 10 to 15 are specific to SIMOVERT MASTERDRIVES and are not defined in the PROFIBUS profile.

The meaning of the reply ID for the reply telegram (converter → master) is shown in Table 4-5. This also corresponds to the specifications in the "PROFIBUS profile for variable-speed drives".

Reply IDs 11 to 15 are specific to SIMOVERT MASTERDRIVES and are not defined in the PROFIBUS profile. If the reply ID has the value 7 (task cannot be executed), an error number is placed in parameter value 1 (PWE1).

Task ID	Meaning	Reply ID	
		positive	negative
0	No task	0	7 or 8
1	Request parameter value	1 or 2	↑
2	Change parameter value (word) for non-indexed parameters	1	|
3	Change parameter value (double word) for non-indexed parameters	2	|
4	Request descriptive element **1**	3	|
5	Change descriptive element **(not with CBL)**	3	|
6	Request parameter value (array) **1**	4 or 5	|
7	Change parameter value (array, word) for indexed parameters **2**	4	|
8	Change parameter value (array, double word) for indexed parameters **2**	5	|
9	Request number of array elements	6	|
10	Reserved	-	|
11	Change parameter value (array, double word) and store in the EEPROM **2**	5	|
12	Change parameter value (array, word) and store in the EEPROM **2**	4	|
13	Change parameter value (double word) and store in the EEPROM	2	|
14	Change parameter value (word) and store in the EEPROM	1	↓
15	Read or change text **(not with CBL)**	15	7 or 8

1 The required element of the parameter description is specified in IND (2nd word)

2 The required element of the indexed parameter is specified in IND (2nd word)

Table 4-4 Task ID (master → converter)

Reply ID	Meaning
0	No reply
1	Transfer parameter value in the case of non-indexed parameters (word)
2	Transfer parameter value in the case of non-indexed parameters (double word)
3	Transfer descriptive element[1]
4	Transfer parameter value (array, word) in the case of indexed parameters
5	Transfer parameter value (array, double word) in the case of indexed parameters [2]
6	Transfer number of array elements
7	Task cannot be executed (with error number in PWE1)
8	No operator change rights for the PKW interface
9	Parameter change report (word) **(not with CBL)**
10	Parameter change report (double word) **(not with CBL)**
11	Parameter change report (array, word) [2] **(not with CBL)**
12	Parameter change report (array, double word) [2] **(not with CBL)**
13	Reserved
14	Reserved
15	Transfer text **(not with CBL)**

[1] The required element of the parameter description is specified in IND (2nd word)

[2] The required element of the indexed parameter is specified in IND (2nd word)

Table 4-5 Reply ID (converter → master)

Example of parameter identifier

Source for the ON/OFF command (control word 1, bit 0):
P554 (=22A Hex)
Change parameter value (array, word) and store in the EEPROM.

1st word	Parameter ID (PKE)			
Bit No.:	15 12	11	10 0	
	AK	SPM	PNU	
	Byte 1		Byte 0	
Binary value	1 1 0 0	0	0 1 0	0 0 1 0 1 0 1 0
HEX value	C	2	2	A

Bits 12 to 15: Value = 12 (= "C" Hex); change parameter value (array, word) and store in the EEPROM

Bits 0 to 11: Value = 554 (= "22A" Hex); parameter number without a set parameter change report bit

Error numbers in the case of reply "Task cannot be executed"

Error numbers in case of reply "Task cannot be executed" (converter parameters).
The error numbers are transferred in the 3rd word (PWE1) of the reply.

No.	Meaning	
0	Non-permissible parameter number (PNU)	If there is no PNU
1	Parameter value cannot be changed	If the parameter is a visualization parameter
2	Upper or lower limit exceeded	–
3	Erroneous subindex	–
4	No array	In the case of tasks for indexed parameters, to a non-indexed parameter e.g. Task: ‘Change parameter value (word, array)’ for non-indexed parameter
5	Incorrect data type	–
6	Setting not allowed (can only be reset)	–
7	Descriptive element cannot be altered	Task not possible with MASTERDRIVES
11	No operator control rights	–
12	Key word missing	Converter parameter: ‘Access key' and/or 'Parameter special access' not correctly set
15	No text array present	–
17	Task cannot be executed because of operating status	Converter status does not permit the set task at the moment
101	Parameter number deactivated at present	-
102	Channel width too small	-
103	PKW: number incorrect	–
104	Parameter value not admissible	-
105	The parameter is indexed	In the case of tasks for non-indexed parameters, to an indexed parameter e.g. Task: 'PWE, change word' for indexed parameter
106	Task not implemented	-

Comment on error number 104:
This error number is transferred if, in the converter, no function has been assigned to the parameter value which is to be adopted or if the value cannot be accepted at the time of the change for internal reasons (even though it is within the limits).

Table 4-6 Error numbers in the case of reply "Task cannot be executed" (converter parameter)

Example

The parameter ‘PKW number’ for the G-SST1 (number of net data in the PKW channel):

Minimum value:	0	(0 words)
Maximum value:	127	(corresponds to variable length)
Permissible values for USS:	0, 3, 4 and 127	

If a change task with a PWE other than 0, 3, 4 or 127 is sent to the converter, the reply is: 'Task cannot be executed' with error value 104.

Parameter index (IND) 2nd word

The index is an 8-bit value and is placed in bits 0 to 7. The bits 8 to 15 have additional features. Refer to instruction manual of the converter.

In the case of an indexed parameter, the required index is transferred. The meaning of the indices can be found in the section, "Parameter list", of the instruction manual for the converter.

In the case of a descriptive element, the number of the required element is transferred. The meaning of the descriptive elements can be found in the "PROFIBUS profile for variable-speed drives" (VDI/VDE 3689).

Example Parameter index

Source for the ON/OFF1 command (control word 1, bit 0):
P554 (=22A Hex)
Change parameter value of index 1.

2nd word	**Parameter index (IND)**															
Bit No.:	15							8	7							0
	Byte 3								Byte 2							
Binary value	0	0	0	0	0	0	0	0	0	0	0	0	0	0	0	1
HEX value	0				0				0				1			

Bits 8 to 15: In this case value = 0

Bits 0 to 7: Index or number of the descriptive element

Parameter value (PWE) 3rd and 4th word

The parameter value (PWE) is **always** transferred as a double word (32 bits). **Only one** parameter value at a time can be transferred in one telegram.

A 32-bit parameter value is composed of PWE1 (least significant word, 3rd word) and PWE2 (most significant word, 4th word).

A 16 bit parameter value is transferred in PWE1 (least significant word, 3rd word). In this case, you must set PWE2 (most significant word, 4th word) to the value 0.

Example Parameter value

Source for the ON/OFF1 command (control word 1, bit 0):
P554 (=22A Hex)
Change parameter value of index 1 to the value 3100.

	Parameter value (PWE)			
3rd word (**PWE1**)	Byte 5		Byte 4	
Bit No.:	15 … 8		7 … 0	
HEX value	3	1	0	0

4th word (**PWE2**)	Byte 7		Byte 6	
Bit No.:	31 … 24		23 … 16	
HEX value	0	0	0	0

Bits 8 to 15: Parameter value in the case of 16-bit parameter or low component in the case of 32-bit parameter

Bits 16 to 31: Value = 0 in the case of 16-bit parameter or high component in the case of 32-bit parameter

4.8 Handling PKW via CC-Link

The CBL handles the PKW mechanism transparent for the user. With a set of three **command code** types the user can read and modify parameters (16 bit and 32 bit operands) and read parameter descriptions:

- INDEX Command
- PKE Command
- READ Command

With the **INDEX Command** the user sends the index information (IND). If he wants to write 32 bit parameter the user writes the high word (PWE2) into **written data**. CBL stores the information temporarily and acknowledges the **INDEX Command**. Now the user sends a **PKE Command**. PKE information and low word (PWE1) is transported to CBL. CBL merges the data (PKE, IND, PWE1 and PWE2) and sends an PKW request to the converter. Receiving the PKW reply from converter CBL acknowledges the **PKE Command** from user with a **reply code** and the verified PWE1. If the user has a 32 bit operand he can read the high word (PWE2) by an **READ Command**.

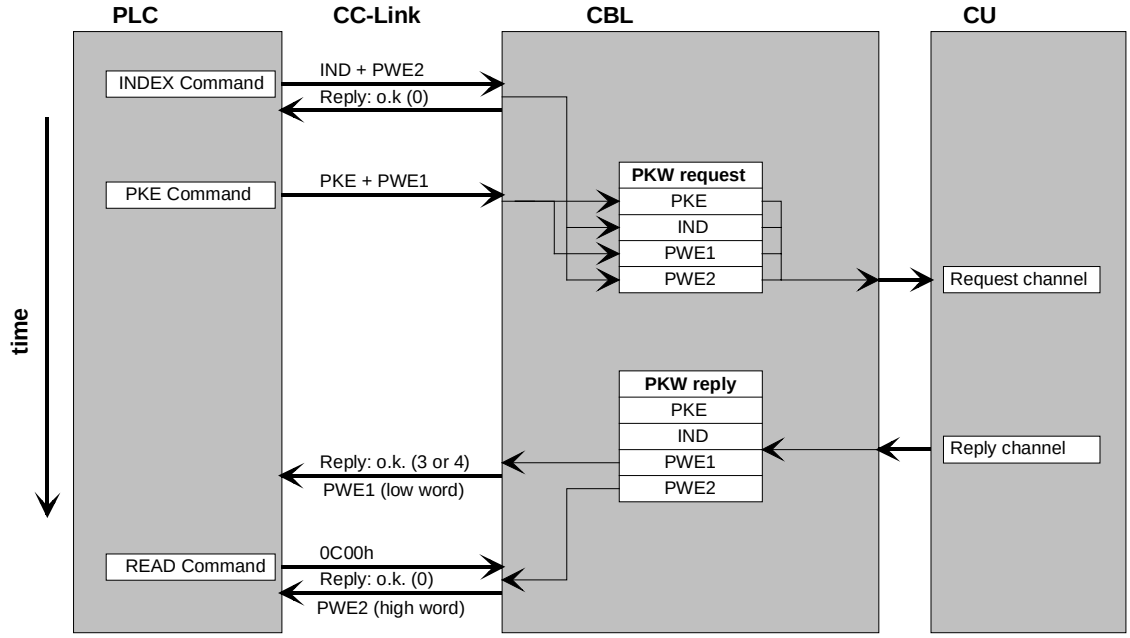

Fig. 4-7 PKW parameter sequence (example: write 32 bit parameter)

The three command codes differ in the bit coding of bit 10 and 11 of the **command code**.

INDEX Command

Starting an **INDEX Command**, first write the index in register **command code** (RWwm+2). Bit 10 has to be 0 and Bit 11 has to be 1! These two bits will be masked out by CBL before storing in temporary buffer **PKW request IND**. All other bits will be sent transparently to the converter. If you want to write a 32 bit parameter, put the high word (bit 31...16) into register **written data** (RWwm+3). Now you can activate control bit **command code execution request** (RYnF). CBL stores the **INDEX-Command** in IND and **written data** in PWE2 of the PKW request data structure. CBL immediately acknowledges the command by placing 0000 into register **reply code** (RWrm+2) and activating control bit **command code execution complete** (RXnF).

INDEX-Command

15	14	13	12	11	10	9	8	7	6	5	4	3	2	1	0
				1	**0**			**Index**							

Rules for INDEX Command:

- If you read a parameter or parameter description, the register **written data** (RWwm+3) is irrelevant.
- If you want to write a 16 bit parameter, the register **written data** (RWwm+3) is irrelevant (interesting only for 32 bit operands).
- If you have an non indexed parameter, you don't need the **INDEX Command**
- Depending on type of converter the grey marked fields in **INDEX Command** have additional features. Refer to the documents of the converter. CBL transports all bits (except bit 10 and 11) transparent to the converter.

PKE Command

Starting a **PKE Command**, first write the PKE information in register **command code** (RWwm+2). Bit 11 has to be 0! If you want to write a parameter, put the data word (bit 15...0; or lower word from 32 bit operand) into register **written data** (RWwm+3). Now you can activate control bit **command code execution request** (RYnF). CBL stores the **PKE-Command** in PKE and **written data** in PWE1 of the PKW request data structure. CBL sends a PKW request to the converter.

PKE-Command

15	14	13	12	11	10	9	8	7	6	5	4	3	2	1	0
Task ID				**0**	**Parameter number**										

When CBL receives the answer (PKW reply), it writes PWE1 into register **read data** (RWrm+3) and fills the register **reply code** (RWrm+2). The reply code is depending on the length of the answer (16 bit operand = 0003; 32 bit operand = 0004). If there was an error at the PKW sequence an error code (800Xh) is filled into register **reply code**. CBL closes the **PKE Command** by activating control bit **command code execution complete** (RXnF).

CBL controls the time between starting **PKE Command** sequence and the end of the handshake. If there is no PKW reply by the converter after 40 seconds the **PKE Command** is closed with reply code 8004 (timeout). During normal operation, a PKW request is served in 20 to 150 ms, depending on the type of MASTERDRIVES unit.

After **PKE Command** is executed **CBL clears the register IND** in the PKW request structure; reason: fault tolerant handling; if you forget to handle the **INDEX Command** before **PKE Command** by accessing indexed parameters an error message will be generated from the converter.

READ Command

Starting a READ **Command**, first write 0C00h in register **command code** (RWwm+2). Now you can activate control bit **command code execution request** (RYnF). CBL writes the higher word of the operand (PWE2) in register **read data** (RWrm+3) and in register **reply code** (RWrm+2) the value 0000 (o.k.). CBL closes the sequence by activating control bit **command code execution complete** (RXnF).

READ-Command (0C00h)

15	14	13	12	11	10	9	8	7	6	5	4	3	2	1	0
0	**0**	**0**	**0**	**1**	**1**	**0**	**0**	**0**	**0**	**0**	**0**	**0**	**0**	**0**	**0**

Rules for READ Command:

- If you read a 16 bit operand you don't need the **READ Command**.

Reply code	Meaning
0000	Positive reply at **INDEX Command** and **READ Command**
0003	Positive reply at **PKE Command**; PKW reply delivers 16 bit data (in PWE1)
0004	Positive reply at **PKE Command***;* PKW reply delivers 32 bit data (low word in PWE1; high word in PWE2)
8004	Negative reply at **PKE Command**; no PKW reply from converter (timeout 40 seconds)
8006	Negative reply at **PKE Command**; PKW reply has an operand longer than 32 bit
8007	Negative reply at **PKE Command**; PKW request cannot be executed; additional error number in PWE1; meaning of additional error number refer to Table 4-6.
8008	Negative reply at **PKE Command**; No operator change rights for PKW interface; refer to chapter 5 "Start-up of the CBL" (P053)

Table 4-7 Reply code of command code execution

NOTE

When changing parameters which are corresponding to CBL (e.g. scaling parameters), they are activated only after a power-on of the converter or a re-initializing of the CBL.

CBL takes copies of its relevant parameter at initialization!

Example

You want to change the setpoint input (**source main setpoint**) to fixed setpoints because you want to control the drive by the bits RL, RM and RH:

1) Read the actual value of parameter P443 (only information):

Because parameter P443 is an indexed parameter you send first time an **INDEX Command**:

Command Code (RWwm+2)	=	0801h
Written Data (RWwm+3)	=	irrelevant

You want to read index 1. There is no write sequence, so register **Written data** is irrelevant. You start the **command code execution** by activating RYnF (=1).

CBL react with activating RXnF (complete flag). You see:

Reply Code (RWrm+2)	=	0000h
Read Data (RWrm+3)	=	irrelevant

Reply code 0000 means no error. Deactivate RYnF! CBL also deactivates RXnF.

Now you send a **PKE Command**:

Command Code (RWwm+2)	=	61BBh
Written Data (RWwm+3)	=	irrelevant

You want to read to an indexed (array) word (16-bit): Task ID is 6 (PKE bit 15...12). Parameter 443 (decimal) is 1BBh (hexadecimal).

After you have activated the **command code execution** you get the acknowledge **command complete** from CBL. You see:

Reply Code (RWrm+2)	=	0003h
Read Data (RWrm+3)	=	3002h

Reply code 0003 indicates there was no error and the answer is a 16 bit word (reply code 0004 means 32 bit word). P443 = 3002 shows you, that the **source main setpoint** is routed to CBL interface (first communication board interface: PZD2 = setpoint).

A **READ Command** is not relevant because you have only a 16-bit word in the PKW reply.

2) Write parameter P443 = 0040:

Because parameter P443 is an indexed parameter you send first time an **INDEX Command**:

Command Code (RWwm+2)	=	0801h
Written Data (RWwm+3)	=	irrelevant

Register **Written data** is irrelevant because P443 is a 16-bit parameter. You activate **INDEX Command** and get the reply:

Reply Code (RWrm+2)	=	0000h
Read Data (RWrm+3)	=	irrelevant

Now you send a **PKE Command**:

Command Code (RWwm+2)	=	71BBh
Written Data (RWwm+3)	=	0040

You want to write an indexed (array) word (16-bit): Task ID is 7 (PKE bit 15...12). Parameter 443 (decimal) is 1BBh (hexadecimal). You activate **PKE Command** and get the reply:

Reply Code (RWrm+2)	=	8007h
Read Data (RWrm+3)	=	0011h

You get an error message:

8007h = PKW request cannot be executed;
additional error number in PWE1

At **PKE Command** the register **Read data** has the contents of PWE1; that means 0011h is the additional error code; 0011h = 17 (decimal)
17 = Task cannot be executed because of operating status.

The error message occurs when you try to change the setpoint channel with the motor running!

3) Write parameter P443 = 0040 (converter not in RUN-mode):

INDEX Command:

Command Code (RWwm+2)	=	0801h
Written Data (RWwm+3)	=	irrelevant

You get the reply:

Reply Code (RWrm+2)	=	0000h
Read Data (RWrm+3)	=	irrelevant

PKE Command:

Command Code (RWwm+2)	=	71BBh
Written Data (RWwm+3)	=	0040

You get the reply:

Reply Code (RWrm+2)	=	0003h
Read Data (RWrm+3)	=	0040h

Reply code: o.k.; information read back is a 16-bit operand.

Read Data: source main setpoint is really changed to 0040.

4.9 Data formats and data conversion

Data format Mitsubishi converter

Mitsubishi converters handle data as unsigned 16 bit integer. The direction of rotation is coded in control bits STF (RYn0) and STR (RYn1). Depending on the process value (e.g. current, frequency) this integer value gets a precision factor:

Process value	Precision integer (1 digit)
Frequency	0.01 Hz
Current	0.01 A
Voltage	0.1 V
Torque	0.1 %
Rotation	1 Rotation/minute

Table 4-8 Mitsubishi data format; precision

Data format SIMOVERT MASTERDRIVES

SIMOVERT MASTERDRIVES works internally with process values in 16 bit or 32 bit signed integer (2nd-complement). These values are normalized in percent:

Integer value		
16 bit	**32 bit**	**Real value**
.	.	.
.	.	.
4000h	4000.0000h	+ 100 %
.	.	.
.	.	.
0000h	0000.0000h	0 %
.	.	.
.	.	.
C000h	C000.0000h	– 100 %
.	.	.
.	.	.

Table 4-9 SIMOVERT MASTERDRIVES internal data format

The display of SIMOVERT MASTERDRIVES shows the absolute value. For this reason there are parameters with scaling factors (e.g. P350...P353). Their contents are the absolute value at + 100 %.

CBL has to convert the data from Mitsubishi data format in MASTERDRIVES data format and vice versa. The CBL uses parameters (P715...P718) **pointing to** the scaling parameters (P350...P353). Other scaling factors may be parameterized. Normally the user sets P715 = 350, P716 = 351, etc. In this way CBL use the same scaling factors like display routines of the converter. CBL automatically adapts the precision between Mitsubishi data format and MASTERDRIVES display format. It uses the parameter description (conversion index in IEEE format) of the scaling factor parameters.

You have two ways to handle the process values:

1) Working with the Mitsubishi data format:
   All reference values (setpoints) and actual values are in the format like Table 4-8. The 16-bit-variables are unsigned integer values. CBL converts all values in both communication directions incl. monitoring; refer to figures in this chapter.

   In this case you have to set the parameter:

   P715 = 350 (current)
   P716 = 351 (voltage)
   P717 = 352 (frequency)
   P718 = 353 (rotation per minute)

2) Working with the internal MASTERDRIVES format:
   All reference values (setpoints) and actual values are in the format like Table 4-9. Exception: At PLC side all values are positive (unsigned)! The sign (positive or negative) is controlled by the direction bits STF (RYn0) and STR (RYn1). CBL doesn't convert the setpoints. Actual values and monitoring values are converted to unsigned integer.

   In this case you have to set the parameter:

   P715 = 0 (current)
   P716 = 0 (voltage)
   P717 = 0 (frequency)
   P718 = 0 (rotation per minute)

NOTE

The CB parameters P715...P718 are **pointers to** scaling parameters.

If a CB parameter (P715...P718) is 0, the corresponding type of process value isn't converted by CBL.

Normally use for parameter P715...P718 the scaling factor parameters P350...P353.

Mixing is possible; that means some values are converted by CBL other ones are not modified.

Example

P717 = 352; ⇒ P352 = 50.00;
actual value frequency = 2000h (MASTERDRIVES internal data format)

P352 shows, that 100 % of a frequency value is 50.00 Hz. The CB parameter P717 points to the parameter P352 "scaling factor frequency"; 100 % equals 4000h. CBL calculates an actual value:

2000h / 4000h * 5000 = 2500 = 9C4h

The following function diagrams show the data conversion of CBL in the different data channels:

Data conversion of setpoints at frequency set command

Frequency control:

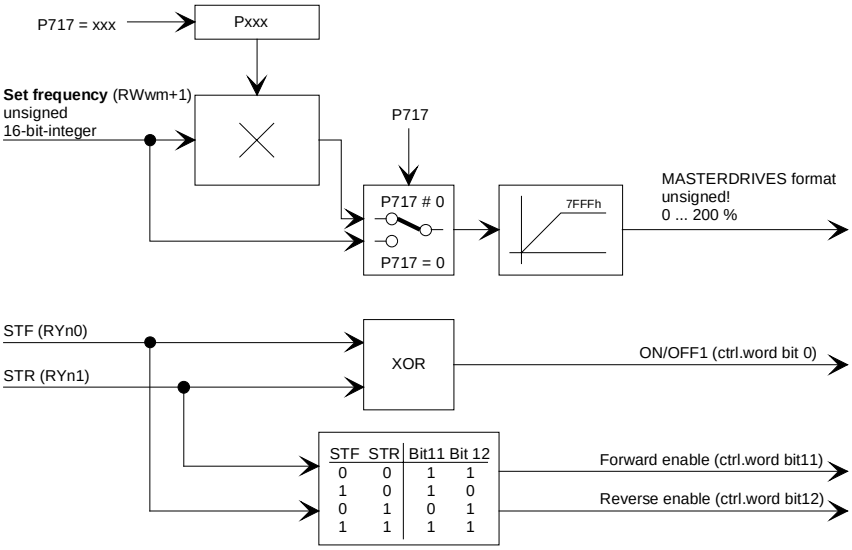

Fig. 4-8 Data conversion at setpoint channel "frequency control"

If P717 equals 0, then setpoints are interpreted from CBL as percentage values in MASTERDRIVES format (unsigned in this case!) between 0 and 7FFFh (0 % ... 200 %); e.g. **set frequency** = 1000h ⇒ 25 %. Values greater than 7FFFh will be set to 7FFFh.
If P717 greater than 0 (P717 is a pointer to scaling parameter), the unsigned integer value corresponds to the frequency value; e.g. **set frequency** = 2000 ⇒ 20.00 Hz.

Torque control:

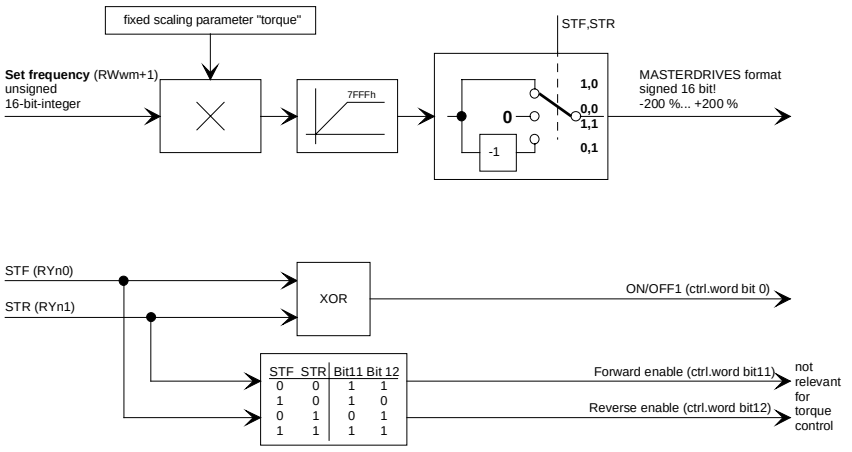

Fig. 4-9 Data conversion at setpoint channel "torque control"

At torque control there is a fixed scaling parameter instead of P717. So torque setpoints everytime converted from unsigned integer format of Mitsubishi inverter into signed MASTERDRIVES value (0 %...200 %). The direction of rotation is coded into the sign of the torque setpoint. CBL creates the 2th-complement of the setpoint if STR = 1 and STF = 0.

Data conversion of actual value

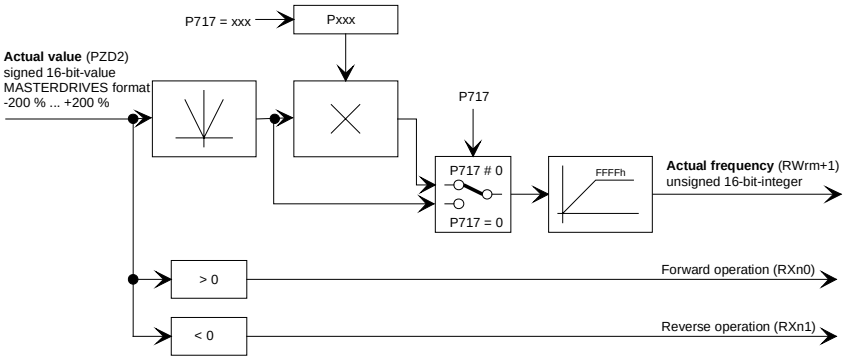

Fig. 4-10 Data conversion at actual value channel

At torque control there is a fixed scaling parameter instead of P717. So torque actual values everytime converted from signed MASTERDRIVES value (-200 %...+200 %) into unsigned integer format of Mitsubishi inverter.

Data conversion at monitoring

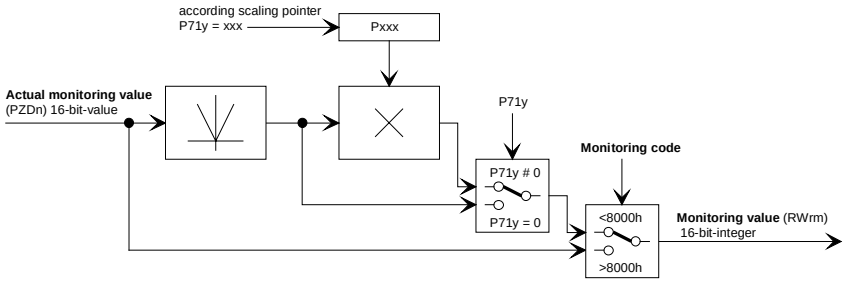

Fig. 4-11 Data conversion at monitoring channel

4.10 Fault reaction on communication errors

If the communication via CC-Link breaks down (e.g. PLC cpu goes into fault, CC-Link cable is disconnected) the reaction of the drive can be programmed depending on your application.

This is selectable by communication board parameter P712 bit 0 "HOLD/CLR function".

HOLD / CLR-function

P712 bit 0 = 1: CLR function

When communication breaks down CBL detects the fault. CBL reacts by sending setpoint 0000 and neutral control bits to the converter. The drive stops.

Remark: Set P722 (Telegram failure time) to 0000.

P712 bit 0 = 0: HOLD function

When communication breaks down CBL detects the fault. CBL don’t react. It gives no further information (telegrams) to the converter. Actual control bits and setpoint are further valid. Drive is still running. Now you can handle the fault reaction by the fault mechanism of the converter. With converter parameter P722 (Telegram failure time) you can supervise the setpoint channel from the communication board. If there is no new telegram from CBL at the setpoint channel in the time interval parameterized in P722, the fault mechanism of the converter starts; refer to documentation of converter.

4.11 Optional flags in CBL profile

In the remote IO bit structure there are some additional flags named

- Optionflags 27, 28, 29 (F27 ... F29)
- Infoflags 0, 7, 15 (I0 ... I15)

Optionflags

The optionflags are freely routable additional bits to control special functions in the converter. CBL transports these bits to the dual port RAM interface. Here you can route the binectors of PZD4 (status word 2) bit 27 till 29 (bit 11...13 of the 16-bit word) to your special function of your application.

Example:

If you want to use the function "OFF3: quick stop" from the PLC route e.g. P558 = 3411. Parameter P558 is one of three inputs (and-function) of control word bit OFF3; B3411 is the binector PZD4 bit 11 of the first communication board; refer to function diagrams 120 and 180 of converter documentation.

Infoflags

The infoflags give you additional information from the status word of the converter:

CC-Link Remote IO Bit	Converter statusword	Meaning
RXn8 = I0	Bit 0	Ready to switch on
RXn9 = I7	Bit 7	Warning active
RxnA = I15	Bit 15	Reserved; refer to converter documentation

Table 4-10 Additional infoflags

5 Start-up of the CBL

Using two communication boards

If two communication boards are used the CB in the lower letter slot is the first one. The CB in the higher letter slot is the second one.

The CB parameters of the first communication board are reached with index 1, the second with index 2; e.g. P711.2 is parameter P711 of the second communication board.

At chapter "softwiring" transmit and receive channel have to be routed to the setpoint and actual value channels. The connectors of the first CB have numbers like 3XXX, the second CB like 8XXX.

If two CBs are used refer to the documentation and function diagrams of the converter and check the connector numbers.

5.1 Basic parameterization of the units

Basic parameterization for MASTERDRIVES with CUMC or CUVC

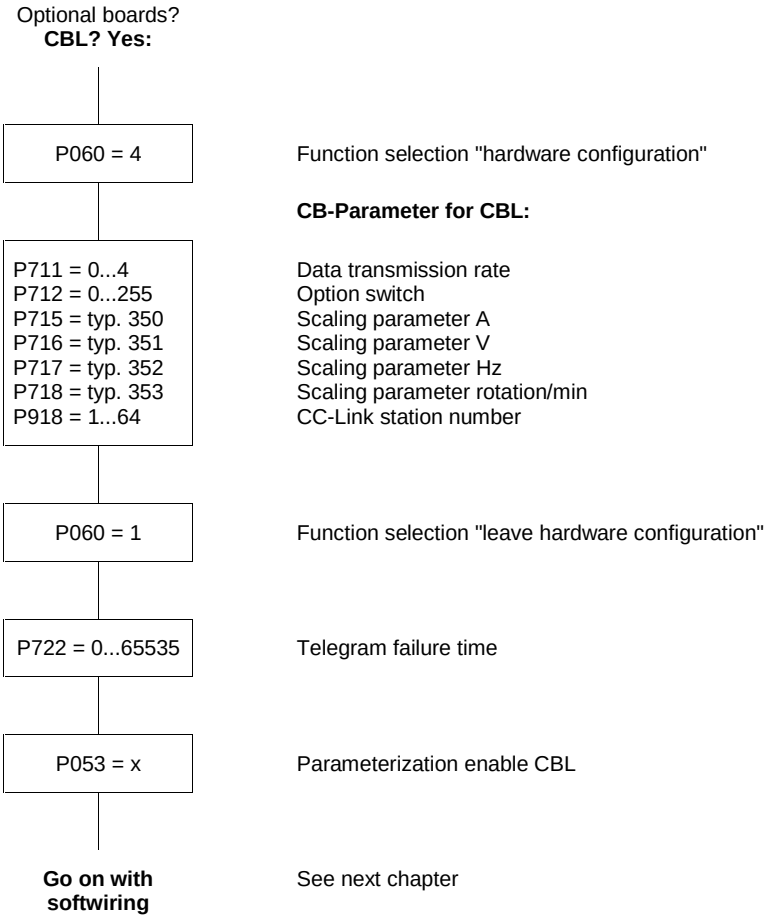

Fig. 5-1 Parameterization of the "hardware configuration" for MASTERDRIVES with CUMC or CUVC

P053 (parameterizing enable)

This parameter is significant for the CBL if you wish to set or change parameters of the converter (incl. technology) by means of parameterizing tasks (PKW task).

In this case, set parameter P053 (see also the parameter list in the instruction manual of the converter) to an odd value (e.g. 1, 3, 7 etc.). With parameter P053, you specify the positions (PMU, CBL etc.) from which it is permissible to change parameters.

E.g.: P053 = 1: Parameterizing enable only CBL
= 3: Parameterizing enable CBL+PMU
= 7: Parameterizing enable CBL+PMU+SST1 (OP)

If the parameter change (= parameterizing enable) is enabled via the CBL (P053 = 1, 3 etc.), all further parameters can be set from the CC-Link master via the bus.

P060

Function selection: "Hardware setting" = 4

P711 (CB parameter 1)

Communication speed CC-Link
With this parameter, the data transmission speed on CC-Link can be set. It has to be the same as the CC-link master.

Default value is 0.

P711	Communication speed	Maximum bus length
0	156 kbits/s	1200m
1	625 kbits/s	600m
2	2.5 Mbits/s	200m
3	5 Mbits/s	150m
4	10 Mbits/s	100m

Example
P711=2: The communication speed is 2.5 Mbits/s.

P712 (CB parameter 2)

Function switch
With this parameter, different options and functions can be activated. At the moment three switches are implemented:

- HOLD / CLR:
  If communication on CC-Link breaks down. The set value will be hold or cleared and the motor will still run or immediately stop. For more information about reaction to a communication breakdown refer to chapter 4.10 "Fault reaction on communication errors" and to documentation of converter (e.g. P722 and P692).
- SPEED / TORQUE CONTROL
  You can select control of motor speed (frequency) or torque.
- DIAGNOSTIC DATA OF CC-LINK OR PKW
  For diagnostic purposes parameter r732 displays different CBL data; only for diagnostic (refer to chapter 6.3 "Evaluation of the CBL diagnostic parameter")

Default value of P712 is 0.

P712

Reserved	Bit 2	Bit 1	Bit 0

Bit 0 = 0 hold function on communication breakdown
1 clr function on communication breakdown

Bit 1 = 0 speed control of the motor
1 torque control

Bit 2 = 0 diagnostic data r732.14 ... r732.25:
CC-Link data (Master ⇒ CBL; CBL ⇒ Master)
1 diagnostic data r732.14 ... r732.25:
parameter data PKW request / reply (CBL <-> CU)

Example
P712 = 5: => Bit 0 = 1; Bit 1 = 0; Bit 2 = 1;
CBL handles the data for regulation of motor speed (frequency). At a break down of communication the motor stops (CLR-function of bit 0). The diagnostic area r732.14 ... r732.25 shows the data structures of PKW request and PKW reply at communication between CBL and CU; refer to Fig. 4-7 (chapter "Handling PKW via CC-Link") and chapter 6.3 "Evaluation of the CBL diagnostic parameter".

P713 (CB parameter 3)
P714 (CB parameter 4)

Reserved parameter

P715 (CB parameter 5)
P716 (CB parameter 6)
P717 (CB parameter 7)
P718 (CB parameter 8)

Scaling parameter (pointer)
With these parameters, CBL converts the Mitsubishi data formats to MASTERDRIVES data format and vice versa. Several scaling parameters handle current, voltage, frequency and revolutions per minute.

The parameters point to scaling parameters. The scaling parameter holds the scaling factor. Typically you use the scaling parameters P350 to P353 which are used in the converter to display the different values.

If the scaling parameter is 0 the data is transported from CBL without conversion. For more information about conversion and the different data formats refer to chapter 4.9 "Data formats and data conversion".

Default value of all scaling parameters is 0.

Parameter	Function	Typical contents
P715	Pointer to scaling parameter **current**	**P350**
P716	Pointer to scaling parameter **voltage**	**P351**
P717	Pointer to scaling parameter **frequency**	**P352**
P718	Pointer to scaling parameter **revolutions per minute**	**P353**

Example:
P715 = 0 and P717 = 352:

- The monitoring value "output current" has the original MASTERDRIVES internal data format (not modified).
- The process values "set frequency" and "actual frequency" in the Mitsubishi data structure are converted into Mitsubishi data format by the CBL (in both transmission directions); incl. monitoring!

P918.1 (CBL bus address)

CC-Link station number
Every station at the CC-Link bus has a station number. The CC-Link master has the address "0". The slave – although the CBL – has an address in the range of "1" till "64".
Use that same address, which is set by the Mitsubishi PLC programming software.

Default value is 0.

Example:

- P918.1 = 0:
  Station number "0" is an invalid address. At initializing CBL the converter will show failure **F080**; r732.1 = 01.
- P918.1 = 3
  CBL has station number "3"; a valid address for remote device station on CC-Link.

Other relevant CBL parameters

P722 (CB/TB TlgOFF)
Telegram failure time With parameter P722 (see also operating instructions of the converter, section "Parameter list"), it can be specified whether the entry of process data into the dual-port RAM by the CBL is to be monitored by the converter or not. The parameter value of this parameter corresponds to the telegram failure time in ms. The pre-assigned value of this parameter is 10 ms, i.e. a maximum of 10 ms allowed between two received process-data telegrams on CC-Link, otherwise the converter switches off with fault F082. With the parameter value 0, the monitoring function is de-activated. The converter monitors the entry of process data into the dual-port RAM from that time at which the CBL enters process data into the dual-port RAM for the first time. Only from this time onwards error F082 can be triggered!

NOTE

If the "ON" command (bit 0) has been softwired to the dual-port RAM, the following measures must be taken for safety reasons:

An "OFF2" or "OFF3" command (see instruction manual of the converter, section "Control word") must be additionally parameterized to the terminal strip / PMU as, otherwise, the converter can no longer be turned off by means of a defined command if the communications system breaks down!

P781.i13 (fault delay)
With this parameter, P781.13, fault F082 can be delayed, i.e. the drive is not turned off immediately when a fault occurs but only after expiry of the time entered in the parameter. This makes it possible to react flexibly to a bus failure. With the help of binector B0035 "CB/TB telegram failure", the drive can be shut down (OFF1 or OFF3) by making the fault delay longer than the ramp-down time.

NOTE

When the above settings have been made, the CBL is regarded as registered in the converter and is ready for communication via the CC-Link.
Changing parameters or specifying process data via the CC-Link is not yet possible after this step.
Parameterization must first be enabled and the process data still have to be softwired in the converter.

5.2 Process-data softwiring in the units

Definition

Process-data softwiring involves logical connection of the setpoints and the control bits. The transferred process data come only into effect when the used bits of the control words, setpoints, status words and actual values have been routed to (logically connected to) the dual-port RAM interface.

The received process data are stored by the CBL at fixed, pre-defined addresses in the dual-port RAM. A connector (e.g. 3001 for PZD1) is assigned to each item of process data (PZDi, i = 1 to 10). The connector also determines whether the corresponding PDZi (i = 1 to 10) is a 16-bit value or a 32-bit value.

The Mitsubishi data structure for converters at CC-Link handles only 16-bit values. So CBL works at the dual-port RAM only with 16-bit values.

By means of selection switches (e.g. P554.1 = selection switch for bit 0 of control word 1), the setpoints or the individual bits of the control words can be assigned to a particular PZDi in the dual-port RAM. To do this, the connector belonging to the desired PZDi is assigned to the selection switch.

NOTE

Control words STW1 and STW2 are also available in bits on so-called binectors within CUMC, CUVC and Compact PLUS. (For an explanation of the BICO system, see Section "Function blocks and parameters").

Softwiring CC-Link

For connecting the MASTERDRIVES converter to CC-Link a **defined set of softwiring** has to be done. Additional features (e.g. optional control and infobits) can be activated by setting additional binectors.

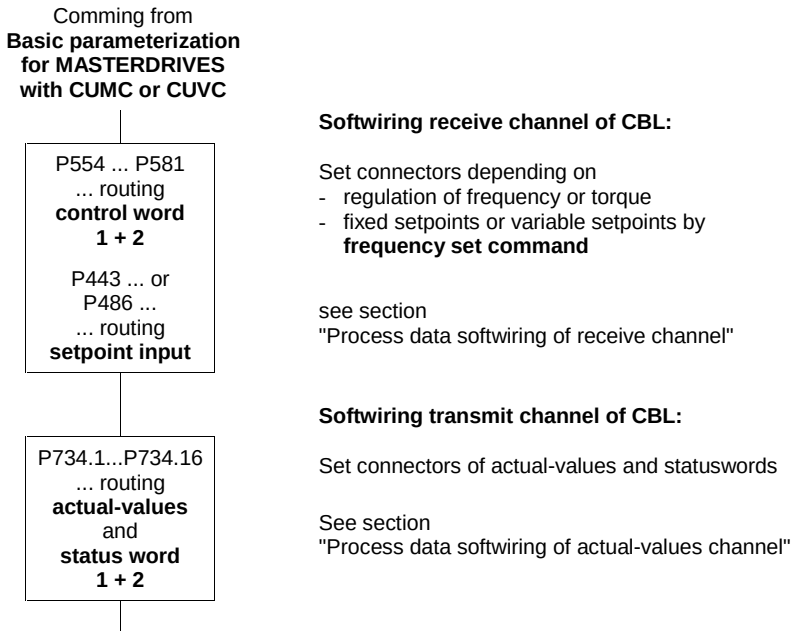

Fig. 5-2 Parameterization of the "hardware configuration" for MASTERDRIVES with CUMC or CUVC

Process data softwiring of receive channel

Parameter	Contents	Meaning
Controlword 1 connecting CBL controlword 1 (REF VALUE: PZD1) to converter controlword 1		
P554	3100	Mandatory: RUN/STOP
P555 1)	3101	Mandatory: MRS function
P565	3107	Mandatory: reset error flag
P568	3108	Mandatory: JOG mode 2)
P569	3109	Mandatory: JOG mode 2)
P571	3111	Mandatory: STF (Forward)
P572	3112	Mandatory: STR (Reverse)

1) use alternativly P555, P556 or P557 (AND function)

2) check P448 and P449 for JOG speed!

NOTE

After power-up till data transmission between PLC cpu and CBL the alarm message A035 will occur and will be displayed (control bits 11 and 12 equals 0!). The duration depends on the converter type and the configuration (tech board plugged?) and takes some seconds. After starting data transmission via CC-Link to PLC cpu the alarm will be automatically cleared.

Parameter	Contents	Meaning
Controlword 2 connecting CBL controlword 2 (REF VALUE: PZD4) to converter controlword 2		
P576	3400	Mandatory: RT function
P577	3401	Mandatory: RT function
P580	3404	Mandatory: RL, RM, RH
P581	3405	Mandatory: RL, RM, RH
P???	3411	Optional: Optionflag F27
P???	3412	Optional: Optionflag F28
P???	3413	Optional: Optionflag F29

The source of the setpoint of the converter has to be defined depending how you want to control the motor

- Variable setpoint values setting with **Frequency Set Command**
- Fixed setpoint values selected by the control bits RL, RM, RH. The fixed values can be parameterized from e.g. PMU or CBL.

Parameter	Contents	Meaning
P444	100 %	Check Parameter! For more information refer to documentation of converter
Setpoint by Frequency Set Command connecting CBL setpoint (REF VALUE: PZD2) to converter setpoint input		
P443	3002	Mandatory if the converter is controlled by **Frequency Set Command** at the PLC
Setpoint by RL, RM, RH connecting fixed setpoint buffer of converter to converter setpoint input		
P443	0040	Mandatory if the converter is controlled by control bits RL, RM and RH in the PLC
P417 P418	0 0	Mandatory: Higher select bits of fixed setpoint buffer
P401	0000 %	Setpoint: 0
P402	xxxx %	Setpoint activated by RL
P403	xxxx %	Setpoint activated by RM
P404	xxxx %	Setpoint activated by RH

If **torque control** is selected the source of the set value has to be as follows:

VC: P486: 3002 or 0040
P487: 100 %

MC: P261: 3002 or 0040

NOTE

Process data connection (softwiring) of the setpoint channel can also be carried out via the CC-Link as long as P053 has been set previously to an odd number.

Process data softwiring of actual-value channel

The actual-value process data (PZDi, i = 1 to 16) are assigned to the corresponding status words and actual values by means of the indexed parameter P734.i (CB/TB actual values). Each index stands for an item of process data.

Parameter	Contents		Meaning
	VC	MC	
Actual-value channel connecting actual-values of converter to CBL transmit channel (ACT VALUE: PZD1...16)			
P734.1	0032		Mandatory: statusword 1
P734.2	0148	0151	Mandatory: actual value frequency
P734.3	0022		Mandatory: actual value output current
P734.4	0033		Mandatory: statusword 2
P734.5	0021	0189	Mandatory: actual value output voltage
P734.6	0070		Mandatory: setpoint frequency
P734.7	0148	0151	Mandatory: actual value rotation
P734.8	0024		Mandatory: actual value torque
P734.9	xxxx		Optional: Optional monitoring value 1
P734.10	xxxx		Optional: Optional monitoring value 2
P734.11	xxxx		Optional: Optional monitoring value 3
P734.12	xxxx		Optional: Optional monitoring value 4
P734.13	xxxx		Optional: Optional monitoring value 5
P734.14	xxxx		Optional: Optional monitoring value 6
P734.15	xxxx		Optional: Optional monitoring value 7
P734.16	xxxx		Optional: Optional monitoring value 8

NOTE

CC-Link and the specified data structure for converters handle only 16-bit values. For using 32-bit connectors refer to documentation of converter.

6 Diagnosis and troubleshooting

6.1 Evaluation of hardware diagnostics

LED displays

On front of the optional CBL board, there are two groups of LEDs. Three LEDs display the global status of CBL and four LEDs give information on the current status of the CC-Link interface.

The following LEDs are provided:

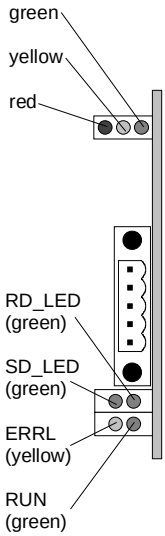

- LED_GREEN Telegram traffic via CC-Link
- LED_YELLOW Data exchange with the basic unit
- LED_RED CBL on

- RD_LED Detecting the carrier on the link
- SD_LED CBL transmitting data
- ERRL Data transmission errors (CRC) or hardware faults
- RUN Receive refresh and polling frames normally

Status display: o.k.

LED	Status	Diagnostic information CBL
Red	Flashing	CBL in operation; voltage supply on
Yellow	Flashing	Fault-free data exchange with the basic unit
Green	Flashing	Fault-free process-data transfer via the CC-Link

Table 6-1 Status display of the CBL

LED	Status	Diagnostic information CC-Link
RDLED	Continuously lit	Detecting the carrier on CC-Link
SDLED	Continuously lit	CBL is transmitting
RUN	Continuously lit	Receive refresh and polling telegrams; data transfer
ERRL	OFF	No data transmission errors (CRC); no hardware error

Table 6-2 Status display CC-Link interface

NOTE

During normal operation, the three CBL status LEDs (red, yellow and green) light up synchronously and for the same length of time (flashing)!

The stationary status of an LED (ON or OFF) indicates an unusual operating status (parameterization phase or fault!)

During normal operation, the green CC-Link-LEDs are continuously lit. The yellow one is off!

Diagnostic sequence:

❍ LED off
✹ LED flashing
● LED continuous lit
\- LED information irrelevant

Diagnostic sequence

CBL status LEDs			CC-Link interface LEDs				Refer to
RED	**YELLOW**	**GREEN**	**RDLED**	**SDLED**	**RUNLED**	**ERRLED**	
❍	-	-	-	-	-	-	Case 1
●	-	-	-	-	-	-	
✹	❍	❍	-	-	-	-	Case 2
✹	❍	●	-	-	-	-	Case 3
✹	●	❍	-	-	-	-	Case 4
✹	●	●	-	-	-	-	Case 5
✹	✹	❍	❍	-	-	-	Case 6
✹	✹	❍	●	❍	-	-	Case 7
✹	✹	❍	●	●	❍	-	Case 8
✹	✹	●	●	●	●	-	Case 9
-	-	-	-	-	-	✹	Case 10
✹	✹	✹	●	●	●	❍	**o.k.**

Table 6-3 Diagnostic sequence

Diagnostic steps:

Case 1

LED	Status	Diagnostic information CBL
Red	ON or OFF	CU, Tech-board or CBL is defective. Error occured on CBL Check: • Connection between CBL and other boards • Restart converter with power-down /-up • Earth/protective conductor (EMC-faults)
Yellow	-	
Green	-	

Table 6-4 Fault display: Faults on CBL

Case 2

LED	Status	Diagnostic information CBL
Red	Flashing	CU, Tech board or CBL is defective. Communication error between base board and CBL Check: • Connection between CBL and other boards • Restart converter with power-down /-up • Earth/protective conductor (EMC-faults)
Yellow	OFF	
Green	OFF	

Table 6-5 Display during operation: Communication error at DPRAM

Case 3

LED	Status	Diagnostic information CBL
Red	Flashing	CBL is waiting for start of parameterization / initialization by the converter / inverter. This sequence is automatically started by CU after power-up and re-parameterizing. CBL will stay in this status for some seconds till CU is initialized.
Yellow	OFF	
Green	Continuously lit	

Table 6-6 Display during operation: CBL is waiting for parameterization

Case 4

LED	Status	Diagnostic information CC-Link
Red	Flashing	CBL is waiting for completion of parameterization / initialization by the converter / inverter. Normally this state is so fast handled, that this LED status can't be seen.
Yellow	Continuously lit	
Green	OFF	

Table 6-7 Display during operation: CBL is waiting for acknowledge of parameterization

Case 5

LED	Status	Diagnostic information CBL
Red	Flashing	CBL is fetching the scaling parameters from CU. CBL will stay in this status for some seconds. It depends on the configuration. If an tech board is plugged, it takes some more time. If CBL don't leave this status look for alarm messages A081...A086. Check: • CB-Parameter P715...P718 • Parameters which are selected by P715...P718 • Tech board and CU
Yellow	Continuously lit	
Green	Continuously lit	

Table 6-8 Display during operation: CBL fetches scaling parameters

Case 6

LED	Status	Diagnostic information CBL
Red	Flashing	CBL now parameterized and has fetched the scaling parameters. The CC-Link interface is initialized. **Check CC-Link interface LEDs**
Yellow	Flashing	
Green	OFF	

Table 6-9 Display during operation: CC-Link initialized

Now it is assumed that the CBL-LEDs red and yellow are synchronous flashing.

LED	Status	Diagnostic information CC-Link
RDLED	OFF	CBL detects no carrier at CC-Link (signal edges not detected); check connection to CC-Link Check the connector, correct connection of signals DA, DB, DG and SLD (at CBL and CC-Link master)
SDLED	OFF	
RUNLED	OFF	
ERRLED	OFF	

Table 6-10 Fault display during operation: No carrier detected

Case 7

LED	Status	Diagnostic information CC-Link
RDLED	ON	CBL detects carrier at CC-Link but doesn't answer Check: • Data transmission rate in P711 (same as CC-Link master?) • CC-Link station number in P918 (same as configured in PLC programming software) • Station address already existent • PLC network configuration: remote device station, occupies 1 station, with station number like P918
SDLED	OFF	
RUNLED	OFF	
ERRLED	OFF	

Table 6-11 Fault display during operation: NO answer of CBL to CC-Link master

Case 8

LED	Status	Diagnostic information CC-Link
RDLED	ON	CBL receives and sends frames Check: • PLC network configuration: remote device station, occupies 1 station, with station number like P918
SDLED	ON	
RUNLED	OFF	
ERRLED	OFF	

Table 6-12 Fault display during operation: NO RUNLED at CBL

Case 9

LED	Status	Diagnostic information CC-Link
RDLED	ON	CBL communicates correctly on CC-Link! O.k. **Check CBL status LEDs!**
SDLED	ON	
RUNLED	ON	
ERRLED	OFF	

Table 6-13 Display during operation: CBL communicates on CC-Link

Now the three green CC-Link status LEDs continuously lit. Check the green LED of CBL status.

LED	Status	Diagnostic information CBL
Red	Flashing	CBL communicates correctly! But there is no data transfer with PLC cpu! Check: • PLC cpu: status "STOP" or "FAULT"? PLC cpu has to be at "RUN"! • PLC cpu status "RUN" and CBL is waiting for handling the **initial process sequence** by the PLC software (look for the request and completion flag in CC-Link inverter data structure)
Yellow	Flashing	
Green	Continuously lit	

Table 6-14 Display during operation: No data transfer with PLC cpu

Case 10

LED	Status	Diagnostic information CC-Link
ERRLED	Flashing	CBL detects data communication errors (CRC error) at data transmission! Check: • Shield connection of the cable at housing of CU and at all CC-Link stations (EMC faults!) • Check cable length of CC-Link bus according to the data transmission rate!

Table 6-15 Fault display during operation: CRC error at CC-Link

6.2 Fault displays and alarms on the basic unit

If errors/faults occur in initialization of CBL, corresponding errors or alarms are also displayed on the PMU or OP1S of the basic unit.

Alarms

Alarm	Meaning
A 035	Alarm message from converter: After power-up till data transmission between PLC cpu and CBL the alarm message A035 will occur and will be displayed (control bits 11 and 12 equals 0!). The duration depends on the converter type and the configuration (tech board plugged?) and take some seconds. After starting data transmission via CC-Link to PLC cpu the alarm will be automatically cleared.
A 081	Invalid P715
A 082	Invalid P716
A 083	Invalid P717
A 084	Invalid P718
	• Wrong parameter number (parameter of technology board) • Parameter number according to technology board and technology board not plugged ⇒ Change parameter value
A 085	Invalid P712 • invalid switches (bits) are activated in P712 ⇒ Check P712 and change parameter value
A 086	CBL is waiting for scaling parameters • CBL requests the scaling parameters and is waiting for reply; Tech board or base board perhaps in initialization mode. If CBL don't clear this warning after a time period ⇒ Check converter status ⇒ Check base board or tech board
A 087	CBL hardware error • CBL detects hardware error • CBL detects improper state • CBL not correctly inserted into the electronics box ⇒ Restart converter ⇒ Check connection between converter (CU) and CBL ⇒ Replace CBL
A 088	CBL communication error • CBL detects improper status at communication with CU • CBL not correctly inserted into the electronics box ⇒ Restart converter ⇒ Check connection between converter (CU) and CBL ⇒ Replace CBL ⇒ Replace CU
A 089 ... A 096	Warnings of second CB subtract 8 and look for the warning code documentation of used (second) CB.

• Possible cause
⇒ Remedy

Table 6-16 Alarm displays on the basic unit

Alarms A081 and A088 are also stored for information purposes in alarm parameter 6 (r958). The individual alarms are assigned to the corresponding bits in r958 (Bit x = 1: alarm present):

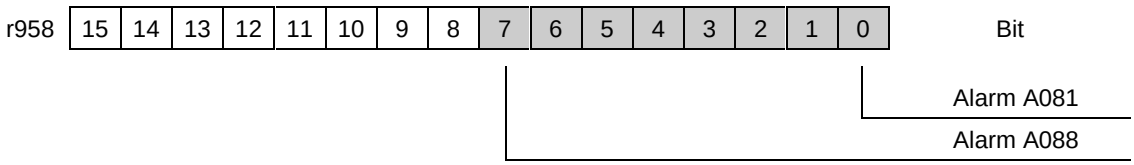

A second CB uses the bits 8 to 15 of r958 and the warnings A089 to A096.

Fault/error display

When the CBL is combined with the control/technology board (CU/TB), the following fault messages may occur:

Fault	Meaning
F 080	**TB/CB Init.:** Incorrect initialization and parameterization of the CBL via the dual-port RAM interface (DPR interface) • Parameterization for CBL false, cause of incorrect parameterization in diagnostic parameter r732.01 ⇒ Correct CB parameter P711-P718. ⇒ Correct CB bus address (CC-Link) P918. • CBL defective ⇒ Replace CBL
F 081	**DPR heartbeat:** The CBL is no longer processing the heartbeat counter. • CBL not correctly inserted into the electronics box ⇒ Check CBL • CBL defective ⇒ Replace CBL
F 082	**DPR telegram failure:** The telegram-failure time set by means of parameter P722 has expired. • PLC (bus master) failed (green LED on the CBL is continuously off) ⇒ Check PLC (cpu and CC-Link master) ⇒ Check cable • Connection between the bus nodes has been interrupted (green LED on the CBL is continuously off, RUNLED, SDLED and RDLED are continuously off) ⇒ Check the bus cable ⇒ Check PLC (CC-Link master) • EMC loading of the bus cable too high (ERRLED flashes) ⇒ Refer to EMC notes • Telegram monitoring time has been set too low (green, yellow and red LED on the CBL flashes synchronous) ⇒ Increase the parameter value in P722 • CBL defective ⇒ Replace CBL

• Possible cause
⇒ Remedy

Table 6-17 Fault displays on the basic unit

6.3 Evaluation of the CBL diagnostic parameter

The CBL stores this information into a diagnostics buffer to support start-up and for service purposes. The diagnostic information can be read out with indexed parameter r732.i (CB/TB diagnosis). This parameter is displayed as a hexadecimal value. The CBL diagnostics buffer is assigned as follows:

CBL-diagnosis parameter

Meaning			**r732.i**
Fault detection configuration			r732.1
Counter telegrams received without faults/errors **ONLINE**			r732.2
Counter telegrams received without faults/errors **OFFLINE**			r732.3
Counter for receiver overrun			r732.4
Counter for transmitter underrun			r732.5
Counter for CRC errors at receiver			r732.6
Counter for timeouts			r732.7
Assigned internally			r732.8
Reserved			r732.9
Counter for detected **Initial Data Setting** Sequences			r732.10
Counter for detected **Frequency Set Commands**			r732.11
Counter for detected **Command Requests**			r732.12
Counter for activated PKW requests			r732.13
P712 Bit 2: 0	**P712 Bit 2: 1**		
M->R_Yn+00...0F	PKW request:	PKE	r732.14
M->R_Yn+10...1F		IND	r732.15
M->R_RWwm+0 (monitor code)		PWE1	r732.16
M->R_RWwm+1 (set frequency)		PWE2	r732.17
M->R_RWwm+2 (command code)	Reserved		r732.18
M->R_RWwm+3 (written data)	Reserved		r732.19
R->M_Xn+00...0F	PKW reply:	PKE	r732.20
R->M_Xn+10...1F		IND	r732.21
R->M_RWrm+0 (monitor value)		PWE1	r732.22
R->M_RWrm+1 (actual value)		PWE2	r732.23
R->M_RWrm+2 (reply code)	PKW reply length (in words)		r732.24
R->M_RWrm+3 (read data)	Reserved		r732.25
Software version			r732.26
Software identification			r732.27
Software date, day/month			r732.28
Software date, year			r732.29

Table 6-18 CBL diagnostics buffer

6.4 Meaning of CBL diagnostics

r732.1 **Fault detection configuration**

If an invalid value or an invalid combination of parameter values is detected in the CB parameters, the converter switches to fault mode with fault F080 and fault value 5 (r949). The cause of the incorrect parameterization can then be determined by means of the CB diagnostic parameter r732.

Value (hex)	Meaning
00	No fault/error
01	Incorrect CC-Link address (P918)
02	Incorrect transmission rate (P711)
03	Incorrect scaling parameter in P715 (parameter number > 3999)
04	Incorrect scaling parameter in P716 (parameter number > 3999)
05	Incorrect scaling parameter in P717 (parameter number > 3999)
06	Incorrect scaling parameter in P718 (parameter number > 3999)
07	Incorrect softwiring in REF VALUE channel (double words routed)
08	Incorrect softwiring in ACT VALUE channel (double words routed)
09	Incorrect configuration sequence
0A-...	Reserved

Table 6-19 CBL diagnostics buffer: configuration error

r732.02 **Counter received telegrams without fault; ONLINE**
Counter for telegrams received error-free with data transfer between PLC and CBL.

r732.03 **Counter received telegrams without fault; OFFLINE**
Counter for telegrams received error free with no data transfer between PLC and CBL. Reason:

- PLC in status stop or fault. CC-Link master still polling.
- PLC running; CBL is waiting for complete **initial process sequence** (acknowledge by PLC).

r732.04 **Counter overrun**
Counter of receiver overrun; receive and transmit handling in CBL is not finished until next data polling.

r732.05 **Counter underrun**
Counter for transmitter underrun; transmitter is not fast enough to send newest transmit data.

r732.06 **Counter CRC errors in receiver**
Counter for data transmission errors (crc errors) in receive data.

r732.07 **Counter timeout**
Counter for timout in polling sequence to CBL; CBL didn’t receive any faultless data frame in a defined time period.

r732.10	**Counter Initial Data Setting** Counter for detected **Initial Data Setting***;* reset sequences for CC-Link interface of CBL initiated by PLC.
r732.11	**Counter Frequency Set Command** Counter for detected **Frequency Set Command***;* command sequences to send new reference values to the converter.
r732.12	**Counter Command Request** Counter for detected **Command Request***;* command sequences to parameterize the converter. The command request uses the PKW request interface.
r732.13	**Counter PKW Request** Counter for PKW requests; every count is a PKW request through the DPRAM interface of CBL.

P712 Bit 2: 0	**Diagnostic page selection: CC-Link data**	
	Data from PLC (CC-Link)	
r732.14	M->RYn+00...0F	
r732.15	M->RYn+10...1F	
r732.16	M->R_RWwm+0	(monitor code)
r732.17	M->R_RWwm+1	(frequency set command)
r732.18	M->R_RWwm+2	(command code)
r732.19	M->R_RWwm+3	(written data)
	Data to PLC (CC-Link)	
r732.20	R->MXn+00...0F	
r732.21	R->MXn+10...1F	
r732.22	R->M_RWrm+0	(monitor value)
r732.23	R->M_RWrm+1	(actual frequency)
r732.24	R->M_RWrm+2	(command reply)
r732.25	R->M_RWrm+3	(read data)

P712 Bit 2: 1	**Diagnostic page selection: PKW request/reply data**
	PKW request from CBL to CU
r732.14	PKE
r732.15	IND
r732.16	PWE1
r732.17	PWE2
r732.18	Reserved
r732.19	Reserved
	PKW reply from CU to CBL
r732.20	PKE
r732.21	IND
r732.22	PWE1
r732.23	PWE2
r732.24	Length of PKW reply (length in 16 bit words)
r732.25	Reserved

r732.26	**Software version** example: contents 0021 => version 2.1
r732.27	**Software identifier**
r732.28	**Software date** Software date, day (high byte) and month (low byte) shown in hexadecimal form
r732.29	**Software date** Software date, year (shown in hexadecimal form)

7 Technical data

Order No.	6SE7090-0XX84-0GB0
Size (length x width)	90 mm x 83 mm
Degree of pollution	Pollution degree 2 to IEC 664-1 (DIN VDE 0110/T1), Moisture condensation during operation is not permissible.
Mechanical specifications	to DIN IEC 68-2-6 (if board correctly mounted)
During stationary use	
• deflection	0.15 mm in the frequency range 10 Hz to 58 Hz
• acceleration	19.6 m/s^2 in the frequency range > 58 Hz to 500 Hz
During transport	
• deflection	3.5 mm in the frequency range 5 Hz to 9 Hz
• acceleration	9.8 m/s^2 in the frequency range > 9 Hz to 500 Hz
Climatic class	Class 3K3 to DIN IEC 721-3-3 (during operation)
Type of cooling	Natural-air cooling
Permissible ambient or cooling-medium temperature	
• during operation	0° C to +70° C (32° F to 158° F)
• during storage	–25° C to +70° C (-13° F to 158° F)
• during transport	–25° C to +70° C (-13° F to 158° F)
Humidity rating	Relative humidity ≤ 95 % during transport and storage ≤ 85 % during operation (moisture condensation not permissible)
Supply voltage	5 V ± 5 %, max. 500 mA, internally from the basic unit

8 Appendix

Bit conversion CBL

CBL bit conversion from converter to CC-Link interface

CC-Link profile bit	Derived from
RXn0	Polarity of actual value
RXn1	Polarity of actual value
RXn2	Statusword bit 2
RXn3	Statusword bit 8
RXn4	Statusword bit 22
RXn5	Statusword bit 11
RXn6	Statusword bit 10
RXn7	Statusword bit 3
RXn8	Statusword bit 0
RXn9	Statusword bit 7
RXnA	Statusword bit 15

RXn+1A	Statusword bit Bit 3

CBL bit conversion from CC-Link interface to converter

Controlword bit	Derived from
0	STF **XOR** STR
1	**NOT** MRS
2	1
3	1
4	1
5	1
6	1
7	ERRF
8	JOG1
9	JOG2
10	1
11	STF, STR
12	See below
13	0
14	0
15	0

16	RT = 0 => 00
17	RT = 1 => 01
18	0
19	0
20	RH = 11, RM = 10,
21	RL = 01
22	0
23	1
24	1
25	1
26	0
27	F27
28	F28
29	F29
30	0
31	0

Remote IO Bits		Controlword	
STF	**STR**	**Forward enable (Bit 11)**	**Reverse Enable (Bit 12)**
0	0	1	1
1	0	1	0
0	1	0	1
1	1	1	1

The following editions have been published so far:

Edition	Internal Item Number
AA	477 761 4070 76 J AA-76

Version AA consists of the following chapters:

Chapter		Changes	Pages	Version date
1	Definitions and Warnings	first edition	3	03.99
2	Description	first edition	5	03.99
3	Connecting-up	first edition	6	03.99
4	Communication via CC-Link	first edition	29	03.99
5	Start-up of the CBL	first edition	9	03.99
6	Diagnosis and troubleshooting	first edition	11	03.99
7	Technical data	first edition	1	03.99
8	Appendix	first edition	2	03.99

Group: Automation and Drives (A&D)
Division: Variable-Speed Drive Systems
Postfach 3269, D-91050 Erlangen

Siemens Aktiengesellschaft

Subject to change

Order No.: 6SE7087-6NX84-0GB0
Printed in the Federal Republic of Germany
03.99

Contents

0 Definitions and Warnings 0-1

1 Description 1-1

2 Technical Data 2-1

3 Installation 3-1

4 Connecting-up 4-1

5 Displays 5-1

6 Start-up 6-1

0 Definitions and Warnings

Qualified personnel

For the purpose of this documentation and the product warning labels, a "Qualified person" is someone who is familiar with the installation, mounting, start-up, operation and maintenance of the product. He or she must have the following qualifications:

- Trained or authorized to energize, de-energize, ground and tag circuits and equipment in accordance with established safety procedures.
- Trained or authorized in the proper care and use of protective equipment in accordance with established safety procedures.
- Trained in rendering first aid.



DANGER

For the purpose of this documentation and the product warning labels, "Danger" indicates death, severe personal injury or substantial property damage will result if proper precautions are not taken.



WARNING

For the purpose of this documentation and the product warning labels, "Warning" indicates death, severe personal injury or property damage can result if proper precautions are not taken.



CAUTION

For the purpose of this documentation and the product warning labels, "Caution" indicates that minor personal injury or material damage can result if proper precautions are not taken.

NOTE

For the purpose of this documentation, "Note" indicates important information about the product or about the respective part of the documentation which is essential to highlight.



WARNING

- Hazardous voltages are present in this electrical equipment during operation.
- Non-observance of the warnings can thus result in severe personal injury or property damage.
- Only qualified personnel should work on or around the equipment
- This personnel must be thoroughly familiar with all warning and maintenance procedures contained in this documentation.
- The successful and safe operation of this equipment is dependent on correct transport, proper storage and installation as well as careful operation and maintenance.



CAUTION

Components which can be destroyed by electrostatic discharge (ESD)

The board contains components which can be destroyed by electrostatic discharge. These components can be easily destroyed if not carefully handled. If you have to handle electronic boards, please observe the following:

- Electronic boards should only be touched when absolutely necessary.
- The human body must be electrically discharged before touching an electronic board.
- Boards must not come into contact with highly insulating materials - e.g. plastic parts, insulated desktops, articles of clothing manufactured from man-made fibers.
- Boards must only be placed on conductive surfaces.
- Boards and components should only be stored and transported in conductive packaging (e.g. metalized plastic boxes or metal containers).
- If the packing material is not conductive, the boards must be wrapped with a conductive packaging material, e.g. conductive foam rubber or household aluminium foil.

The necessary ESD protective measures are clearly shown in the following diagram:

- a = Conductive floor surface
- b = ESD table
- c = ESD shoes
- d = ESD overall
- e = ESD chain
- f = Cubicle ground connection

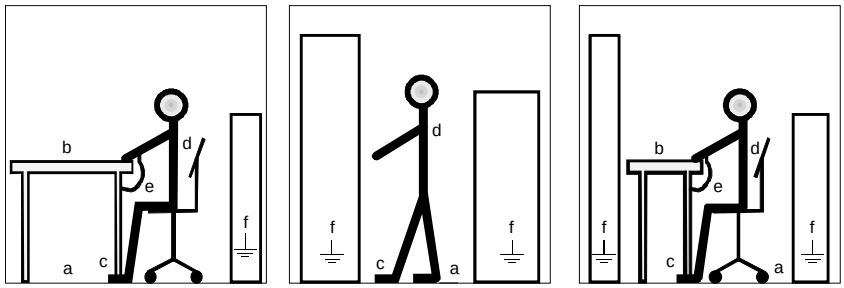

Fig. 0-1 ESD protective measures

1 Description

The CBP optional board (PROFIBUS communications board) is for linking drives to higher-level automation systems via PROFIBUS.

The optional board has three LEDs (green, yellow, red) for providing information on the current operating status.

Voltage is supplied from the basic unit.

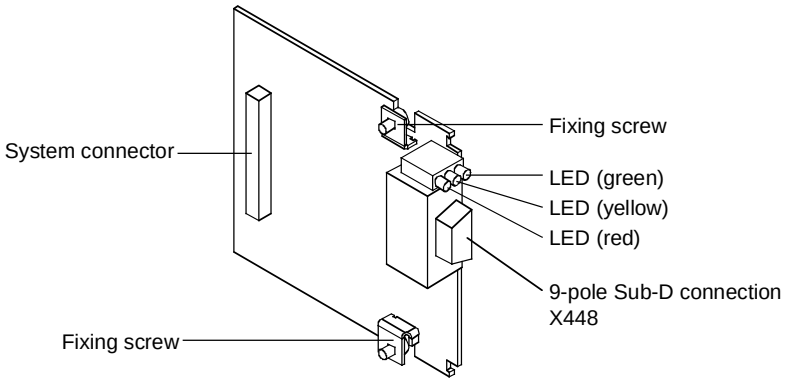

Fig. 1-1 View of the CBP optional board

Data exchange via PROFIBUS

The bus system enables very fast transfer of data between higher-level systems (e.g. SIMATIC, SIMADYN D, PC/PGs) and the drives. Access to the drives is made in the bus system according to the master-slaves method. The drives are always the slaves and each slave is clearly defined by its address.

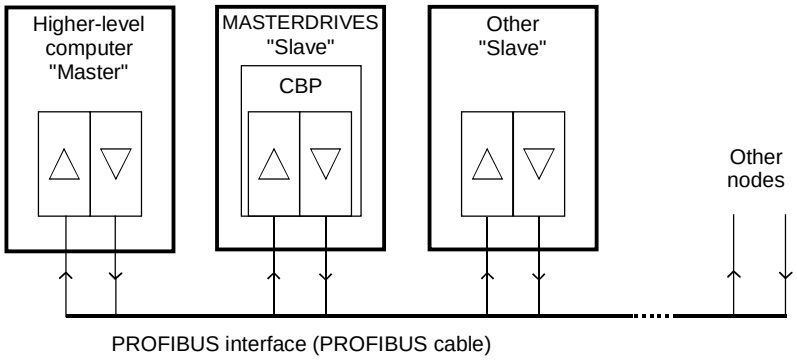

Fig. 1-2 PROFIBUS connections

PROFIBUS telegram

Data is exchanged via telegrams. Useful data are transferred in each telegram which can be divided up into two groups:

- 1. Parameters (parameter identifier value, PKW)
- 2. Process data (PZD)

Protocol frame (Header)	**Useful data**		Protocol frame (Trailer)
	Parameters (PKW)[1)]	**Process data (PZD)**	

1)PKW: Parameter identifier value

Fig. 1-3 Structure of useful data in the PROFIBUS DP telegram

In the PKW area, all data intended for reading or writing parameter values and for reading parameter characteristics are transferred.

In the PZD area, all information necessary for guiding a variable-speed drive is transferred. Control information (control words) and setpoints are given to the slaves by the PROFIBUS DP master. Information on the status of the slaves (status words) and actual values are transferred in the reverse direction.

The length of the PKW and PZD data portions in the telegram is determined by the master. The master also specifies the baud rate. Only the bus address and, if necessary, the telegram failure time are set on the slave.

2 Technical Data

Order number	CBP: 6SE7090-0XX84-0FF0 CBP2: 6SE7090-0XX84-0FF5
Size (length x width)	90 mm x 83 mm
Pollution degree	Pollution degree 2 acc. to IEC 664-1 (DIN VDE 0110/T1), moisture condensation is not permissible in operation
Mechanical strength During stationary operation - Deflection - Acceleration During transport - Deflection - Acceleration	Acc. to DIN IEC 68-2-6 (for correctly installed board) 0.15 mm in frequency range 10 Hz to 58 Hz 19.6 m/s² in frequency range > 58 Hz to 500 Hz 3.5 mm in frequency range 5 Hz to 9 Hz 9.8 m/s² in frequency range > 9 Hz to 500 Hz
Climate class	Class 3K3 to DIN IEC 721-3-3 (in operation)
Type of cooling	Natural-air cooling
Permissible ambient or coolant temperature - during operation - during storage - during transport	 0° C to +70° C (32° F to 158° F) -25° C to +70° C (-13° F to 158° F) -25° C to +70° C (-13° F to 158° F)

Permissible humidity rating	Relative air humidity	≤ 95 % during transport and storage ≤ 85 % in operation (condensation not permissible)
Supply voltage	5 V ± 5 %, max. 600 mA, internally from basic unit	
Output voltage	5 V ± 10 %, max. 100 mA, electrically isolated supply (X448/Pin 6) - for bus termination of the serial interface or - for supply of an OLP (Optical Link Plug)	
Data transfer rate	max. 12 MBaud	

Table 2-1 Technical Data

NOTE

For reasons of space, optical link plugs cannot be used for Compact units, types 1 and 2!

3 Installation

If the inverters/converters are ordered with optional functions, the optional boards are already installed in the units when they are delivered.

It is possible to retrofit optional boards and this can be carried out by the user.

For this purpose, there are either three or up to six slots on the basic unit depending on the type of construction for mounting the optional boards.

An exact description of installation is included with the relevant basic unit. As the unit has to be removed and opened in order to install optional boards, attention must be paid to the ESD measures. Please refer to the operating instructions of the basic unit in this regard.

NOTE

Generally, you can install the CBP optional board (communication board PROFIBUS) in every slot. However, bear in mind that a sensor board always requires slot C.

Two CBPs can be fitted per device.

4 Connecting-up

X448 - Profibus connector

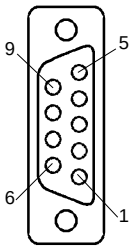

The CBP optional board has a 9-pole Sub-D socket (X448) which is provided for connecting it up to the PROFIBUS system. The connections are floating.

Pin	Designation	Significance	Range
1	SHIELD	Ground connection	
2	-	Not connected	
3	RxD/TxD-P	Receive/transmit data - P (B / B')	RS485
4	CNTR-P	Control signal P	TTL
5	DGND	PROFIBUS data reference potential (C / C')	
6	VP	Supply voltage Plus	5 V ± 10 %
7	-	not connected	
8	RxD/TxD-N	Receive/transmit data - N (A / A')	RS485
9	-	not connected	

Table 4-1 Connection X448

Cable connectors

The cables must be connected via the PROFIBUS connector, as this contains the bus terminating resistors.
The possible PROFIBUS connectors with the different cable outputs are illustrated in the following:

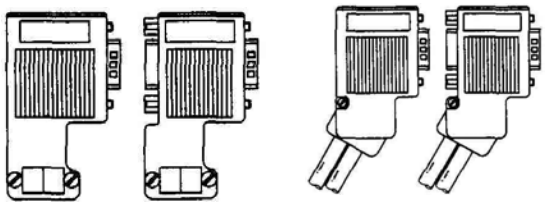

Fig. 4-1 PROFIBUS connectors

Bus terminating resistors

The terminating resistors must be powered up at the last node in the ring because otherwise data transfer is not able to operate satisfactorily.
The cable shield must be connected on both sides and through a large surface area.

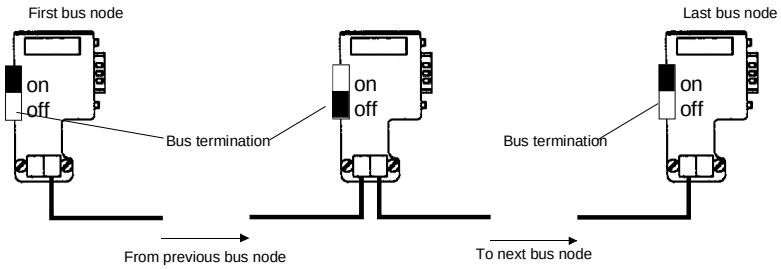

Fig. 4-2 Position of the bus terminating resistors

X448 - USS

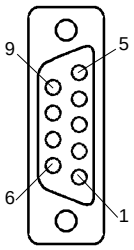

CBP2 only:
X448 pin assignments for connection to USS.
The connections are floating.

Pin	Designation	Significance	Range
1	SHIELD	Ground connection	
2	-	Not connected	
3	RxD/TxD-P	Receive/transmit data - P (B / B')	RS485
4	-	Not connected	
5	DGND	data reference potential (C / C')	
6	VP	Supply voltage Plus	5 V ± 10 %
7	-	not connected	
8	RxD/TxD-N	Receive/transmit data - N (A / A')	RS485
9	-	not connected	

Table 4-2 Connection X448

The CBP2 does **not** have an internal bus connection. An external bus connection can be wired to pins 5/6.

5 Displays

There are three LED displays on the front of the CBP optional board which supply information on the current operating status. The following LEDs are provided:

- CBP operating (red)
- Data transfer with basic unit (yellow)
- Useful data transfer via PROFIBUS (green)

NOTE

- During normal operation, all three LEDs repeatedly light up at the same time and for the same length of time (flashing)!
- If an LED is continuously on or off, this indicates an exceptional condition (parameterization phase or fault)!

Operating display

LED	Status	Diagnostic information
Red	Flashing	CBP operating; voltage supply on
Yellow	Flashing	Fault-free data exchange with the basic unit
Green	Flashing	Fault-free useful data transfer via the PROFIBUS

Table 5-1 Operating display of the CBP

Fault display

LED	Status	Diagnostic information
Red	off/on	Voltage supply for CBP cut off; replace CBP or basic unit
Yellow	off/on	Data exchange with the basic unit is not possible; replace CBP or basic unit
Green	off/on	Transfer of useful data via PROFIBUS is not possible; PROFIBUS cable not connected or is defective

Table 5-2 CBP fault display

6 Start-up

After installation of the CBP optional board has been completed, an automatic self-test will be carried out when the basic unit (converter/inverter) is powered-up.

Afterwards, the new board may have to be logged in on the basic unit and provided with a bus address. Please refer to the documentation on the basic unit for further details in this respect.

NOTE

Please refer to the documentation for the respective basic unit regarding instructions for parameterization using the quick procedure.

Bisher sind folgende Ausgaben erschienen:
The following editions have been published so far:

Ausgabe Edition	Interne Sachnummer Internal Item Number
AA	477 755 4070 76 J AA-74
AB	477 755 4070 76 J AB-74
AC	477 755 4070 76 J AC-74

Ausgabe AC besteht aus folgenden Kapiteln:
Version AC consists of the following chapters:

	Kapitel	Chapter	Seitenzahl Pages	Ausgabedatum Version date
0	Definitionen und Warnungen	Definitions and warnings	4	08.99
1	Beschreibung	Description	3	08.99
2	Technische Daten	Technical Data	2	08.99
3	Montage	Installation	1	08.99
4	Anschließen	Connecting-up	3	08.99
5	Anzeigen	Displays	2	08.99
6	Inbetriebsetzung	Start-up	1	08.99

Automation und Drives
Drehzahlveränderbare Antriebe
Postfach 3269, D-91050 Erlangen

Siemens Aktiengesellschaft

Änderungen vorbehalten

Bestell-Nr. / Order No.: 6SE7087-6NX84-0FF0
Printed in the federal Republic of Germany
08.99

1 Definitions and Warnings

Qualified personnel

For the purpose of this documentation and the product warning labels, a "Qualified person" is someone who is familiar with the installation, mounting, start-up, operation and maintenance of the product. He or she must have the following qualifications:

- Trained or authorized to energize, de-energize, ground and tag circuits and equipment in accordance with established safety procedures.
- Trained or authorized in the proper care and use of protective equipment in accordance with established safety procedures.
- Trained in rendering first aid.

DANGER



indicates an **imminently** hazardous situation which, if not avoided, will result in death, serious injury and considerable damage to property.

WARNING



indicates a **potentially** hazardous situation which, if not avoided, could result in death, serious injury and considerable damage to property.

CAUTION



used with the safety alert symbol indicates a potentially hazardous situation which, if not avoided, may result in minor or moderate injury.

CAUTION

used without safety alert symbol indicates a potentially hazardous situation which, if not avoided, may result in property damage.

NOTICE

NOTICE used without the safety alert symbol indicates a potential situation which, if not avoided, may result in an undesirable result or state.

NOTE

For the purpose of this documentation, "Note" indicates important information about the product or about the respective part of the documentation which is essential to highlight.

WARNING



Hazardous voltages are present in this electrical equipment during operation.

Non-observance of the warnings can thus result in severe personal injury or property damage.

Only qualified personnel should work on or around the equipment

This personnel must be thoroughly familiar with all warning and maintenance procedures contained in this documentation.

The successful and safe operation of this equipment is dependent on correct transport, proper storage and installation as well as careful operation and maintenance.

NOTE

This documentation does not purport to cover all details on all types of the product, nor to provide for every possible contingency to be met in connection with installation, operation or maintenance.

Should further information be desired or should particular problems arise which are not covered sufficiently for the purchaser's purposes, the matter should be referred to the local SIEMENS sales office.

The contents of this documentation shall not become part of or modify any prior or existing agreement, commitment or relationship. The sales contract contains the entire obligation of SIEMENS AG. The warranty contained in the contract between the parties is the sole warranty of SIEMENS AG. Any statements contained herein do not create new warranties or modify the existing warranty.

Proper use of Siemens products

WARNING



Siemens products may only be used for the applications described in the catalog and in the relevant technical documentation. If products and components from other manufacturers are used, these must be recommended or approved by Siemens. Proper transport, storage, installation, assembly, commissioning, operation and maintenance are required to ensure that the products operate safely and without any problems. The permissible ambient conditions must be adhered to. The information in the relevant documentation must be observed.

CAUTION



Components which can be destroyed by electrostatic discharge (ESD)

The board contains components which can be destroyed by electrostatic discharge. These components can be easily destroyed if not carefully handled. If you have to handle electronic boards, please observe the following:

Electronic boards should only be touched when absolutely necessary.

The human body must be electrically discharged before touching an electronic board.

Boards must not come into contact with highly insulating materials - e.g. plastic parts, insulated desktops, articles of clothing manufactured from man-made fibers.

Boards must only be placed on conductive surfaces.

Boards and components should only be stored and transported in conductive packaging (e.g. metalized plastic boxes or metal containers).

If the packing material is not conductive, the boards must be wrapped with a conductive packaging material, e.g. conductive foam rubber or household aluminium foil.

The necessary ESD protective measures are clearly shown again in the following diagram:

- a = Conductive floor surface
- b = ESD table
- c = ESD shoes
- d = ESD overall
- e = ESD chain
- f = Cubicle ground connection

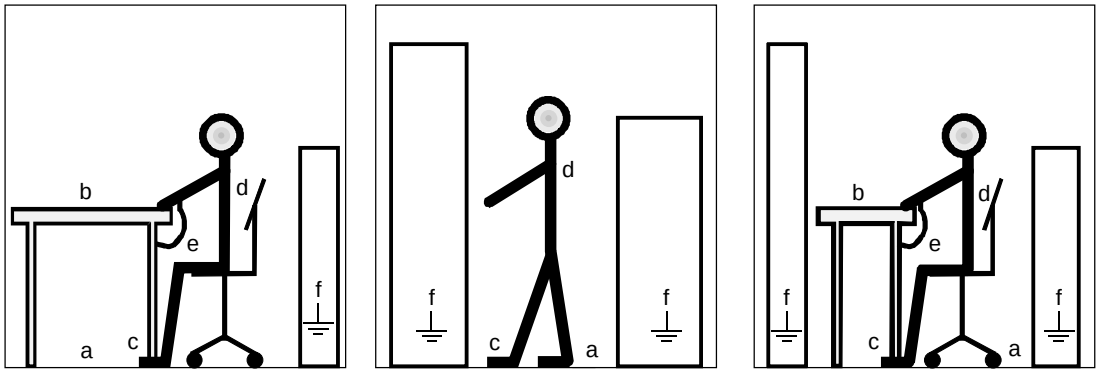

Fig. 1-1 ESD protective measures

Residual risks of Power Drive Systems (PDS)

DANGER



The components for the controller and drive of a Power Drive System (PDS) are authorized for industrial and commercial use in industrial networks. Their use in public networks requires a different planning and/or additional measures.

It is only permissible to operate these components in enclosed housings or in superordinate control cabinets and when all protective devices and protective covers are used.

These components may only be handled by qualified and trained specialist persons who are familiar with and observe all the safety instructions on the components and in the relevant technical user documentation.

The machine manufacturer must take into account the following residual risks resulting from the components for the controller and drive of a Power Drive System (PDS) when evaluating the risk of his machine in accordance with the EC machinery guideline.

1. Undesired movements of driven machine components during commissioning, operation, maintenance and repair, e.g. as a result of
   - HW and/or SW errors in the sensors, controller, actuators and connection system
   - Reaction times of the controller and the drive
   - Operation and/or ambient conditions not compliant with the specification
   - Errors in parameterization, programming, wiring and installation
   - Use of radio units/mobile phones in the direct vicinity of the controller
   - External influences/damage.
2. Extraordinary temperatures and emissions of light, noises, particles and gases, e.g. as a result of
   - Component failure
   - Software errors
   - Operation and/or ambient conditions not compliant with the specification
   - External influences/damage.
3. Dangerous contact voltages, e.g. as a result of
   - Component failure
   - Influence upon electrostatic charging
   - Induction of voltages in the case of moving motors
   - Operation and/or ambient conditions not compliant with the specification
   - Condensation/conductive contamination
   - External influences/damage.
4. Operational electrical, magnetic and electromagnetic fields that may pose a risk to people with a pacemaker, implants or metallic items if they are too close.
5. Release of pollutants and emissions if components are not operated or disposed of properly.

For additional information on the residual risks emanating from the components of the PDS, please refer to the relevant chapters of the technical user documentation.

DANGER



Electrical, magnetic and electromagnetic fields (EMF) that occur during operation can pose a danger to persons who are present in the direct vicinity of the product – especially persons with pacemakers, implants, or similar devices.

The relevant directives and standards must be observed by the machine/plant operators and persons present in the vicinity of the product. These are, for example, EMF Directive 2004/40/EEC and standards EN 12198-1 to -3 pertinent to the European Economic Area (EEA), as well as accident prevention code BGV 11 and the associated rule BGR 11 "Electromagnetic fields" of the German employer's liability accident insurance association pertinent to Germany.

These state that a hazard analysis must be drawn up for every workplace, from which measures for reducing dangers and their impact on persons are derived and applied, and exposure and danger zones are defined and observed.

The safety information in the Storage, Transport, Installation, Commissioning, Operation, Maintenance, Disassembly and Disposal sections must also be taken into account.

2 Product Description

Digital tachometers with different voltage levels can be connected to the "digital tachometer interface" (DTI). The inputs are electrically isolated (floating).

- HTL tachometers (high-voltage transistor logic, 11 V to 30 V)
- TTL- tachometers (transistor- transistor logic, 5 V)

NOTE

An additional 24 V DC power supply is required for the board.

- 0.3 A power supply module (option)

The current drain is a function of the encoder type.

DTI board inputs and outputs		
Terminal strip		**Description**
Input	-X401	TTL
	-X402	HTL
Output	-X403	to the CUVC / CUVP [1] / CU2 control board or
		to the "tachometer and synchronization board" (TSY)
	-X405	TTL output
24 V ext	-X404	Infeed on the installation side

NOTE

Only one of the two input terminal strips -X401 or -X402, may be used.

Table 2-1 DTI inputs and outputs

1) only with 6SE7090-0XX84-3DB1

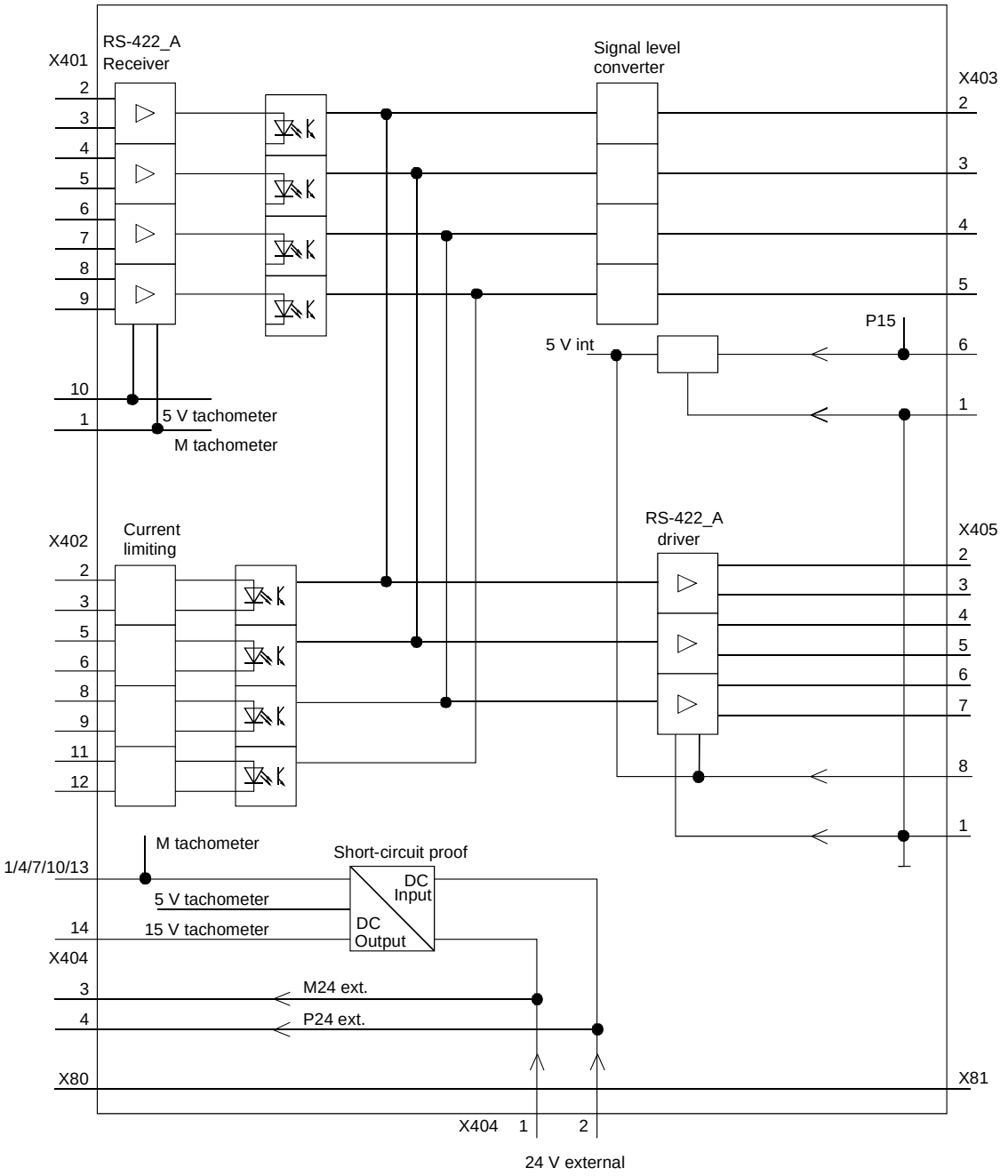

Fig. 2-1 DTI board 6SE7090-0XX84-3DB0 and 6SE7090-0XX84-3DB1

1) P24 only with 6SE7090-0XX84-3DB1

3 Installation, Connecting-up

The board is snapped onto a mounting rail. The components must be wired-up by others.

NOTES

- The board provides no protection against direct contact. Protection against direct contact is ensured by mounting it in an enclosure or in a cabinet.
- Screened cables must be used to prevent EMC disturbance. Screens must be connected at X80 and X81.
- Perfect functioning of the board cannot be guaranteed if the permissible cable lengths are exceeded (refer to figs. 5-1 to 5-4). If longer cable lengths are required, please contact your tachometer manufacturer or supplier.
- Power- and control cables must be separately routed.

Terminal	Function, information	Cable cross-section	
		[mm^2]	AWG [1]
X401:	**TTL tachometer**		
1	Reference potential (M tachometer)	0,5 to 2,5	20 to 14
2	Pulse track A	0,5 to 2,5	20 to 14
3	Inverted pulse track A	0,5 to 2,5	20 to 14
4	Pulse track B	0,5 to 2,5	20 to 14
5	Inverted pulse track B	0,5 to 2,5	20 to 14
6	Position track (not evaluated)	0,5 to 2,5	20 to 14
7	Inverted position track (not evaluated)	0,5 to 2,5	20 to 14
8	Tachometer monitoring track (not evaluated)	0,5 to 2,5	20 to 14
9	Inverted tachometer monitoring track	0,5 to 2,5	20 to 14
10	5 V tachometer supply	0,5 to 2,5	20 to 14

1) American Wire Gauge

Terminal	Function, information	Cable cross-section	
		[mm²]	AWG
X402:	**HTL tachometer**		
1	Reference potential (M tachometer)	0,5 to 2,5	20 to 14
2	Pulse track A	0,5 to 2,5	20 to 14
3	Inverted pulse track A	0,5 to 2,5	20 to 14
4	Reference potential (M tachometer)	0,5 to 2,5	20 to 14
5	Pulse track B	0,5 to 2,5	20 to 14
6	Inverted pulse track B	0,5 to 2,5	20 to 14
7	Reference potential (M tachometer)	0,5 to 2,5	20 to 14
8	Position track (not evaluated)	0,5 to 2,5	20 to 14
9	Inverted position track (not evaluated)	0,5 to 2,5	20 to 14
10	Reference potential (M tachometer)	0,5 to 2,5	20 to 14
11	Tachometer monitoring track (not evaluated)	0,5 to 2,5	20 to 14
12	Inverted tachometer monitoring track	0,5 to 2,5	20 to 14
13	Reference potential (M tachometer)	0,5 to 2,5	20 to 14
14	15 V supply	0,5 to 2,5	20 to 14

Table 3-1 Terminals

NOTES

- In the case of TTL encoders (X401), the signals and the inverse signals of the tachometer must be connected.
- If the inverted signals are not used in the case of HTL encoders, these inputs must be connected at X402 with reference potential (M Tacho) (see Fig. 5-2).
- If a supply voltage of >15 V is necessary for HTL tachometers, it can be picked off from -X404:3 and 4.

Terminal	Function, information	Cable cross-section	
		[mm²]	AWG
X403:	**CU2 / CUVC / CUVP 1) or TSY**		
1	Reference potential	0,5 to 1,5	20 to 16
2	Pulse track A	0,5 to 1,5	20 to 16
3	Pulse track B	0,5 to 1,5	20 to 16
4	Position track (not evaluated)	0,5 to 1,5	20 to 16
5	Tachometer monitoring track	0,5 to 1,5	20 to 16
6	15 V supply / 24 V supply 1)	0,5 to 1,5	20 to 16
X404:	**External 24 V power supply**		
1	Reference potential (M24 ext.)	0,5 to 2,5	20 to 14
2	Power supply voltage (P24 ext.)	0,5 to 2,5	20 to 14
3	Reference potential, tachometer (M24 SV T)	0,5 to 2,5	20 to 14
4	Tachometer supply (P24 SV T)	0,5 to 2,5	20 to 14
X405:	**TTL output**		
1	Reference potential	0,5 to 1,5	20 to 16
2	Pulse track A	0,5 to 1,5	20 to 16
3	Inverted pulse track A	0,5 to 1,5	20 to 16
4	Pulse track B	0,5 to 1,5	20 to 16
5	Inverted pulse track B	0,5 to 1,5	20 to 16
6	Position track	0,5 to 1,5	20 to 16
7	Inverted position track	0,5 to 1,5	20 to 16
8	5 V power supply	0,5 to 1,5	20 to 16
X80	**Grounding point / screen ground**	With cable lug for M4 bolt	
X81	**Grounding point / screen ground**	With cable lug for M4 bolt	

Table 3-2 Terminals

1) only with 6SE7090-0XX84-3DB1

4 Start-up

WARNING



Work must not be done on the module when the power supply is on or the motor is turning.

The safety instructions for MASTERDRIVES are to be complied with.

Prerequisites

- The standard converter start-up with "closed-loop speed control" has been completed.
- Check the existing board combination
  - TSY in conjunction with CU1 (SIMOVERT FC)
  - CU2 (SIMOVERT VC) / CUVC (Vector Control) / CUVP [1] (Vector Control Compact PLUS)
- Determine the tachometer type
- Select and check the input terminals
  HTL ↔ -X402 DTI
  TTL ↔ -X401 DTI
- Establish and check the connection to the converter (refer to figs. 5-1 and 5-2)
  - **SIMOVERT FC**
    DTI -X403 ↔ **TSY** -X113,-X117 ↔ **CU1**-X107 (15-V-Signalpegel)
  - **SIMOVERT VC**
    DTI -X403 ↔ **CU2** -X103 (15 V signal level)
    CUVC -X103 (15 V signal level)
    CUVP [1] -X104 (15 V signal level)
- Select the 24 V power supply for the tachometer
  - 0.3 A power supply module (option)
  - Other 24 V power supplies

NOTE

"Potential separation" is required for the external supply.

- Check that the screen is grounded at both cable ends and that the board is grounded.

[1] only with 6SE7090-0XX84-3DB1

- Set the parameter numbers on the SIMOVERT MASTERDRIVES (refer to the Instruction Manual / Compendium SIMOVERT converter, Section "Parameter list").

SIMOVERT FC
P208, Src Speed(act)
P209, Encoder Pulse #
P090, Brd Slot2
P091, Brd Slot3

SIMOVERT VC (CU2)
P208, Src Speed(act)
P209, Encoder Pulse #

SIMOVERT MASTERDRIVES Vector Control (CUVC / CUVP [1])

P130, Select MotEncod
P151, Encoder Pulse #

[1] only with 6SE7090-0XX84-3DB1

5 Technical Data

Board name		DTI (digital tachometer interface)
Order No.		6SE7090-0XX84-3DB0
Internal power supply voltage		15 V DC, 160 mA
External power supply voltage		24 V DC -16 % +25 %, 300 mA in the case of HTL encoder 24 V DC -16 % +25 %, 150 mA in the case of TTL encoder
Max. loading of encoder supply		HTL encoder: 300 mA TTL encoder: 400 mA
Input current		HTL encoder: 12 mA TTL encoder: 42 mA
Output driver current		HTL encoder: 15 mA TTL encoder: 20 mA
Digital signals, limit frequency		f_{max} 400 kHz
Operating temperature		0 °C to +55°C
Storage temperature		-25 °C to +70°C
Transport temperature		-25 °C to +70°C
Environmental class for operation - Humidity: - Pollutant exposure:	 3K3 3C2	acc. to DIN IEC 721 Part 3-3
Pollution level	2	DIN VDE 0110 Part 1 moisture condensation not permissible
Overvoltage category	II	DIN VDE 0110 Part 2
Degree of protection	IP00	DIN VDE 0470 Part 1 ≙ EN 60529
Mechanical stability		DIN IEC 68-2-6
Dimensions	[mm]	
Width	160	
Height	96	
Depth	46 / 56 [1)]	

	Frequency range	Constant amplitude of the	
		deflection	acceleration
	Hz	mm	m/s^2 (g)
- when stationary	10 to 60	0,35	
	above 60 to 500		49 (5)
- during transport	5 to 9	3,5	
	above 9 to 500		9,8 (1)

1) with 6SE7090-0XX84-3DB1

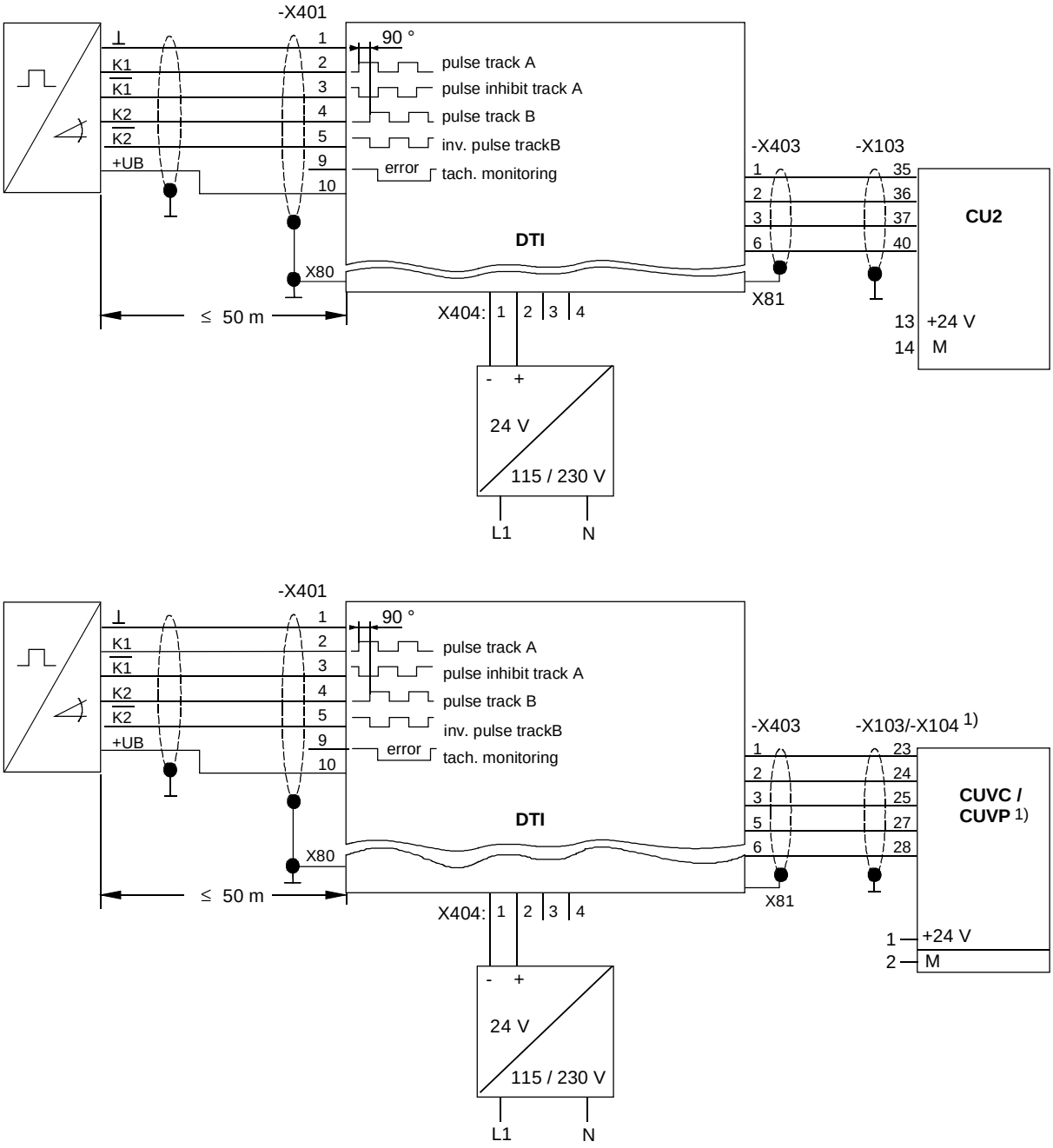

Fig. 5-1 *TTL tachometer with inverted pulse track (type H0G9, Fa. Hübner Berlin) and external power supply for SIMOVERT VC*

1) only with 6SE7090-0XX84-3DB1

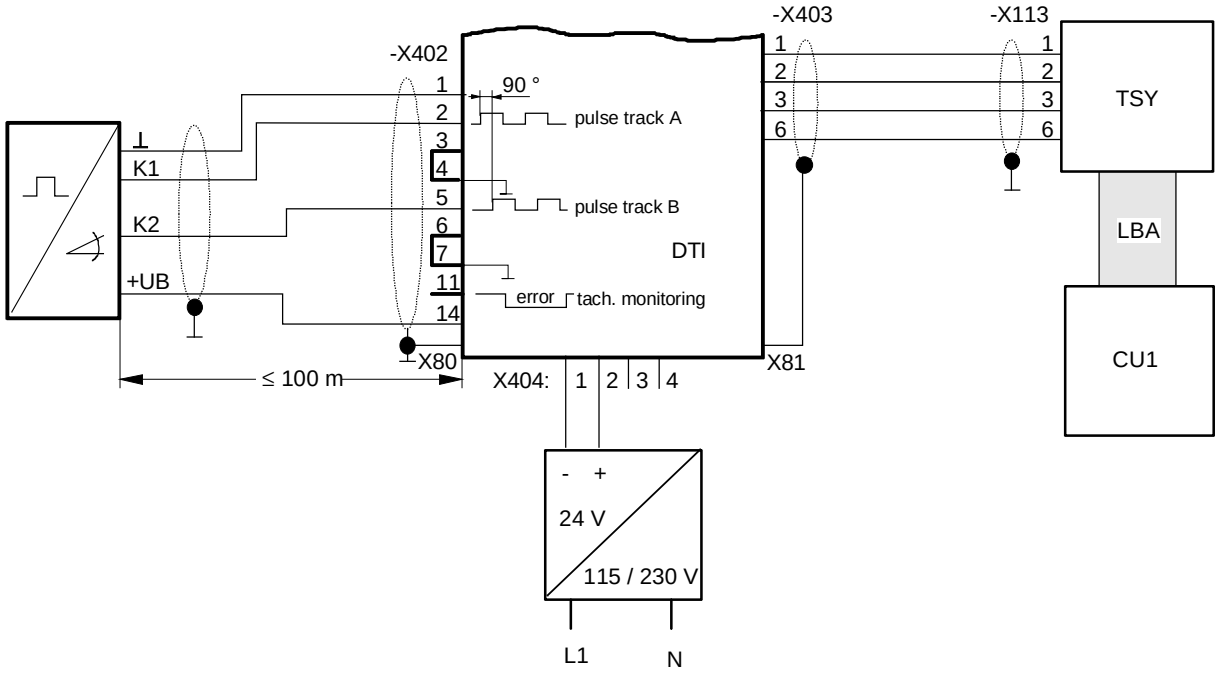

Fig. 5-2 *HTL tachometer without differential track (type H0G9, Fa. Hübner Berlin) when using the TSY board and external power supply for SIMOVERT FC*

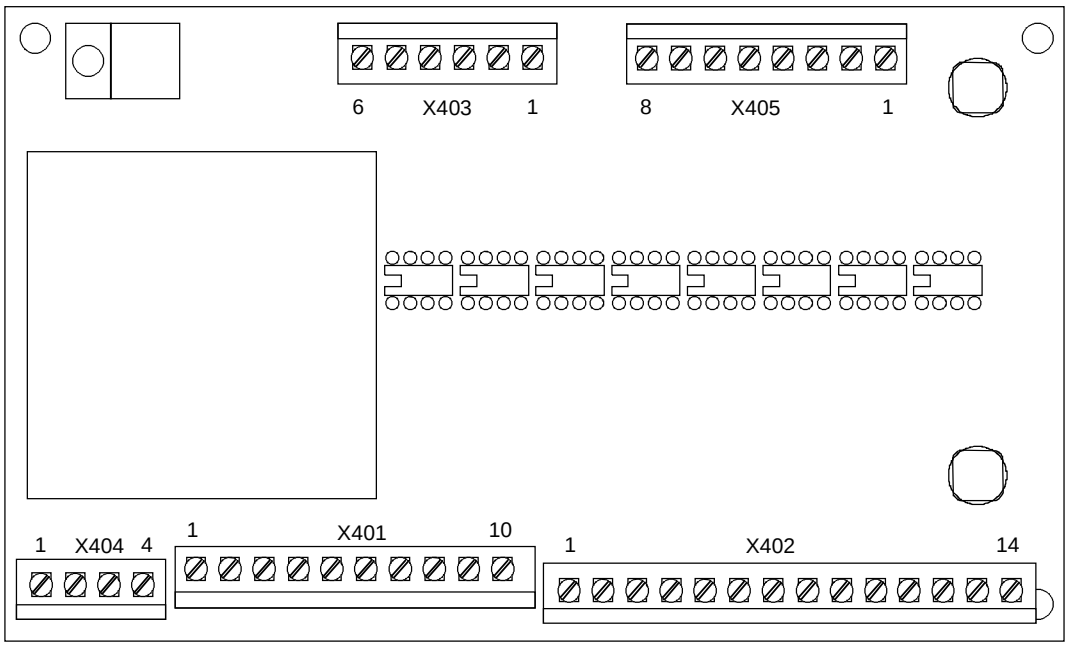

Fig. 5-3 *Terminal strip assignment on the DTI board 6SE7090-0XX84-3DB0*

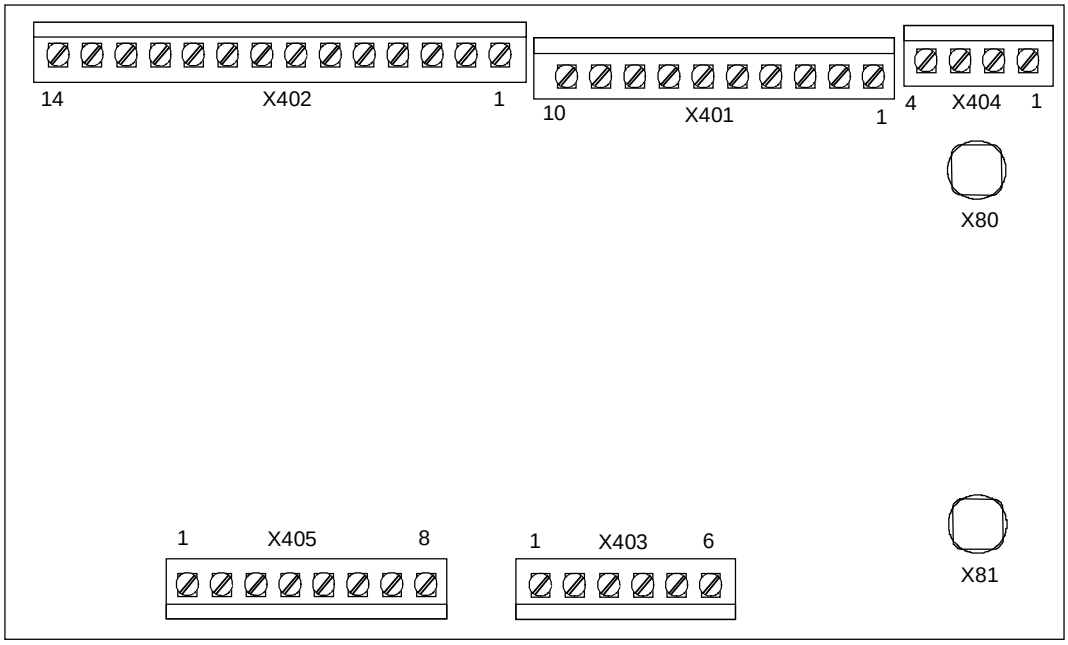

Fig. 5-4 Terminal strip assignment on the DTI board 6SE7090-0XX84-3DB1

NOTE

Order No. 6SE7090-0XX84-3DB0 will be replaced by the compatible successor 6SE7090-0XX84-3DB1.

As an additional function, the successor has an extended voltage range at output X403.6 (see Table 3-2).
The module can therefore also be connected to the Compact PLUS device type.

Bisher sind folgende Ausgaben erschienen:
The following versions have been published so far:

Ausgabe Version	interne Sachnummer Internal item number
01.95	477 431 4000 76 Ja
AB	A5E00388635
AC	A5E00388635
AD	A5E00388635

Ausgabe AD besteht aus folgenden Kapiteln:
Version AD consists of the following chapters:

Kapitel		Chapter	Seitenzahl Pages	Ausgabedatum Version date
1	Definitionen	Definitions	5	01.2009
2	Produktbeschreibung	Product Description	2	11.2006
3	Montieren, Anschließen	Installation, Connecting-up	3	11.2006
4	Inbetriebsetzen	Start-up	2	11.2006
5	Technische Daten	Technical Data	4	11.2006

Änderungen von Funktionen, technischen Daten, Normen, Zeichnungen und Parametern vorbehalten.

We reserve the right to make changes to functions, technical data, standards, drawings and parameters.

Weitergabe sowie Vervielfältigung dieser Unterlage, Verwertung und Mitteilung ihres Inhalts nicht gestattet, soweit nicht ausdrücklich zugestanden. Zuwiderhandlungen verpflichten zu Schadenersatz. Alle Rechte vorbehalten, insbesondere für den Fall der Patenterteilung oder GM-Eintragung.

Wir haben den Inhalt der Druckschrift auf Übereinstimmung mit der beschriebenen Hard- und Software überprüft. Dennoch können Abweichungen nicht ausgeschlossen werden, so dass wir für die vollständige Übereinstimmung keine Garantie übernehmen. Die Angaben in dieser Druckschrift werden jedoch regelmäßig überprüft und notwendige Korrekturen sind in den nachfolgenden Auflagen enthalten. Für Verbesserungsvorschläge sind wir dankbar.

SIMOVERT® ist ein Warenzeichen von Siemens

The reproduction, transmission or use of this document or its contents is not permitted without express written authority. Offenders will be liable for damages. All rights, including rights created by patent grant or registration of a utility model or design, are reserved.

We have checked the contents of this document to ensure that they coincide with the described hardware and software. However, differences cannot be completely excluded, so that we do not accept any guarantee for complete conformance. However, the information in this document is regularly checked and necessary corrections will be included in subsequent editions. We are grateful for any recommendations for improvement.

SIMOVERT® Registered Trade Mark

Siemens AG
Industry Sector
Motion Control Systems
P.O. Box 3180, D – 91050 Erlangen
Germany

www.siemens.com/motioncontrol

© Siemens AG 2009
Subject to change without prior notice
Bestell-Nr./Order No.: 6SE7087-6CX84-3DB0

Printed in Germany

SIEMENS

SIMOVERT MASTERDRIVES

Betriebsanleitung
Operating Instructions

EB1 - Expansion Board 1

Ausgabe / Edition: AA

477 791 4070 76 J AA-74

Contents

0 Definitions and Warnings 0-1

1 Description 1-1

2 Technical Data 2-1

3 Installation 3-1

4 Connecting-up 4-1

5 Start-up 5-1

0 Definitions and Warnings

Qualified personnel

For the purpose of this documentation and the product warning labels, a "Qualified person" is someone who is familiar with the installation, mounting, start-up, operation and maintenance of the product. He or she must have the following qualifications:

- Trained or authorized to energize, de-energize, ground and tag circuits and equipment in accordance with established safety procedures .
- Trained or authorized in the proper care and use of protective equipment in accordance with established safety procedures.
- Trained in rendering first aid.



DANGER

For the purpose of this documentation and the product warning labels, "Danger" indicates death, severe personal injury or substantial property damage will result if proper precautions are not taken.



WARNING

For the purpose of this documentation and the product warning labels, "Warning" indicates death, severe personal injury or property damage can result if proper precautions are not taken .



CAUTION

For the purpose of this documentation and the product warning labels, "Caution" indicates that minor personal injury or material damage can result if proper precautions are not taken.

NOTE

For the purpose of this documentation, "Note" indicates important information about the product or about the respective part of the documentation which is essential to highlight.



WARNING

- Hazardous voltages are present in this electrical equipment during operation.
- Non-observance of the warnings can thus result in severe personal injury or property damage.
- Only qualified personnel should work on or around the equipment
- This personnel must be thoroughly familiar with all warning and maintenance procedures contained in this documentation.
- The successful and safe operation of this equipment is dependent on correct transport, proper storage and installation as well as careful operation and maintenance.



CAUTION

Components which can be destroyed by electrostatic discharge (ESD)

The board contains components which can be destroyed by electrostatic discharge. These components can be easily destroyed if not carefully handled. If you have to handle electronic boards, please observe the following:

- Electronic boards should only be touched when absolutely necessary .
- The human body must be electrically discharged before touching an electronic board.
- Boards must not come into contact with highly insulating materials - e.g. plastic parts, insulated desktops, articles of clothing manufactured from man-made fibers.
- Boards must only be placed on conductive surfaces .
- Boards and components should only be stored and transported in conductive packaging (e.g. metalized plastic boxes or metal containers).
- If the packing material is not conductive, the boards must be wrapped with a conductive packaging material, e.g. conductive foam rubber or household aluminium foil.

The necessary ESD protective measures are clearly shown in the following diagram:

- a = Conductive floor surface
- b = ESD table
- c = ESD shoes
- d = ESD overall
- e = ESD chain
- f = Cubicle ground connection

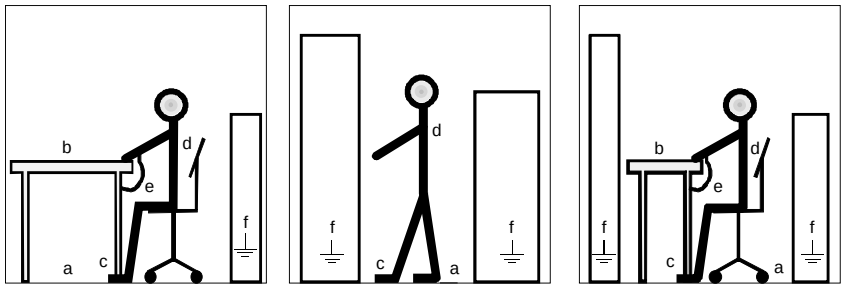

Fig. 0-1 ESD protective measures

1 Description

Range of application

The digital and analog inputs and outputs can be expanded with Expansion Board 1 (EB1).

The EB1 optional board has the following:

- 3 digital inputs
- 4 bidirectional digital inputs/outputs
- 1 analog input with differential signal which can be used as a current input and as a voltage input
- 2 analog inputs (single-ended), which can also be used as digital inputs
- 2 analog outputs
- 1 connection for the external 24 V voltage supply for the digital outputs

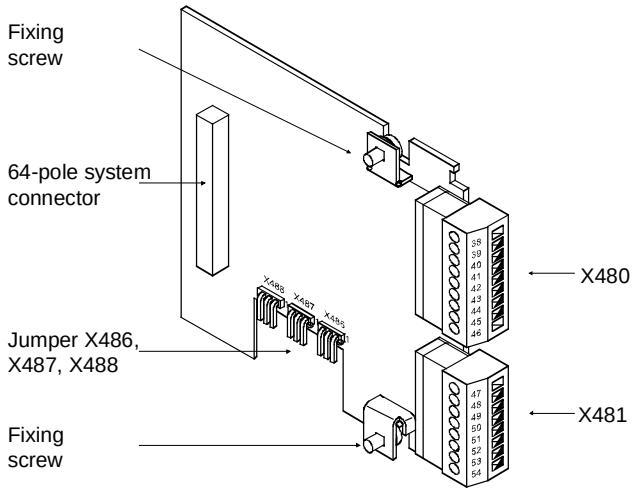

Fig. 1-1 View of the EB1 optional board

2 Technical Data

Order number	6SE7090-0XX84-0KB0
Size (length x width)	90 mm x 83 mm
Pollution degree	Pollution degree 2 acc. to IEC 664-1 (DIN VDE 0110/T1), moisture condensation is not permissible in operation
Mechanical strength During stationary operation - Deflection - Acceleration During transport - Deflection - Acceleration	Acc. to DIN IEC 68-2-6 (for correctly installed board) 0.15 mm in frequency range 10 Hz to 58 Hz 19.6 m/s² in frequency range > 58 Hz to 500 Hz 3.5 mm in frequency range 5 Hz to 9 Hz 9.8 m/s² in frequency range > 9 Hz to 500 Hz
Climate class	Class 3K3 to DIN IEC 721-3-3 (in operation)
Type of cooling	Natural-air cooling
Permissible ambient or coolant temperature - during operation - during storage - during transport	 0° C to +70° C (32° F to 158° F) -25° C to +70° C (-13° F to 158° F) -25° C to +70° C (-13° F to 158° F)
Permissible humidity rating	Relative air humidity ≤ 95 % during transport and storage ≤ 85 % in operation (condensation not permissible)

Table 2-1 General technical data

Digital inputs	DI1, DI2, DI3
• Voltage range LOW	0 V (- 33 V ... + 5 V)
• Voltage range HIGH	+ 24 V (+ 13 V ... + 33 V)
• Input resistance	4 kΩ
• Smoothing	250 µs
• Electrical isolation	none
Bidirectional digital inputs/outputs	DIO1, DIO2, DIO3, DIO4
As input	
• Voltage range LOW	0 V (- 33 V ... + 5 V)
• Voltage range HIGH	+ 24 V (+ 13 V ... + 33 V)
• Input resistance	4 kΩ
As output	
• Voltage range LOW	open
• Voltage range HIGH	> P24 ext. -2.5 V / 100 mA

Analog input (differential input)	AI1P, AI1N
• Input range Voltage Current • Input resistance Voltage Current • Hardware smoothing • Resolution	 ± 10.0 V (± 1 V reserve) ± 20 mA (± 2 mA reserve) 40 kΩ to ground 50 Ω to ground 220 µs 13 bit + sign
Analog input (single-ended), can also be used as digital input	AI2, AI3 AIM
• Input range • Input resistance • Hardware smoothing • Resolution • As digital input: Switching threshold HIGH	± 10,0 V (± 1 V Reserve) 40 kΩ to ground 220 µs 13 bit + sign > 8 V
Analog output Current or voltage signal	AO1, AO2, AOM
• Voltage range • Hardware smoothing • Resolution	± 10.0 V / ± 5 mA 10 µs 11 bit + sign

Table 2-1 Technical data of EB1

3 Installation

If the inverters/converters are ordered with optional functions, the optional boards are already installed in the units when they are delivered.

It is possible to retrofit optional boards and this can be carried out by the user.

For this purpose, there are either three or up to six slots on the basic unit depending on the type of construction for mounting the optional boards.

An exact description of installation is included with the relevant basic unit. As the unit has to be removed and opened in order to install optional boards, attention must be paid to the ESD measures. Please refer to the operating instructions of the basic unit in this regard.

NOTE

Generally, you can install the EB1 optional board in every slot. However, bear in mind that a sensor board always requires slot C.

A maximum of two EB1s can be installed per unit.

4 Connecting-up

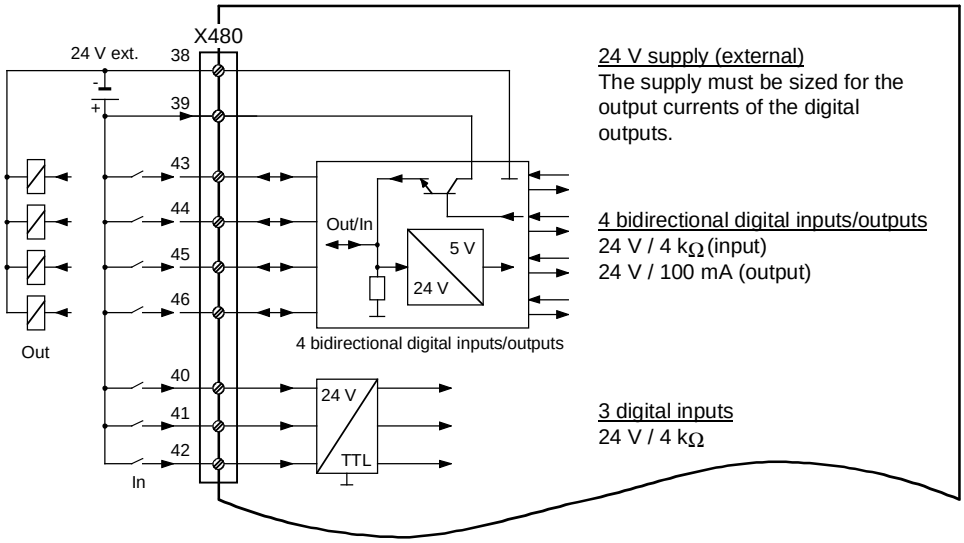

Fig. 4-1 X480 connection overview

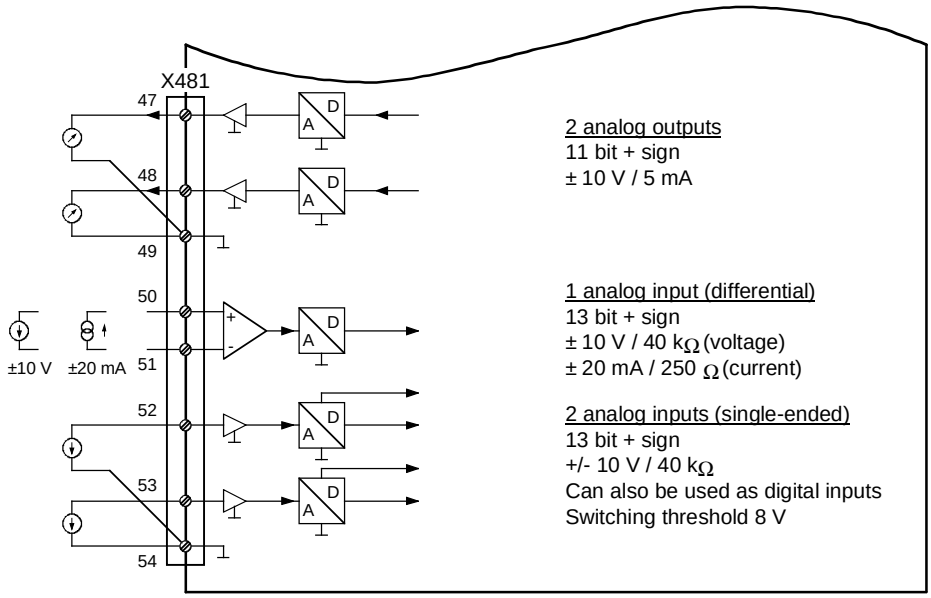

Fig. 4-2 X481 connection overview

X480 - Digital inputs and outputs

The following connections are provided on the terminal strip:

- 3 digital inputs
- 4 bidirectional digital inputs/outputs

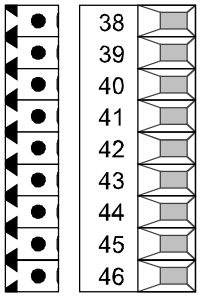

Terminal	Designation	Significance	Range
38	M	Ground digital	0 V
39	P24ext.	Ext. 24 V supply	+20 V ... +33 V
40	DI1	Digital input 1	24 V, Ri = 4 kΩ
41	DI2	Digital input 2	24 V, Ri = 4 kΩ
42	DI3	Digital input 3	24 V, Ri = 4 kΩ
43	DIO1	Digital input/output 1	Input:
44	DIO2	Digital input/output 2	24 V, 4 kΩ
45	DIO3	Digital input/output 3	Output:
46	DIO4	Digital input/output 4	P24ext. - 2.5 V, 100 mA

Connectable cross-section: 1.5 mm² (AWG 16)

The ground cables are protected by a reactor.

Terminal 46 is at the top when installed.

Table 4-1 Terminal assignment at connection X480

NOTE The external 24 V supply must be sized for the currents of the digital outputs.

X481 - Analog inputs and outputs

There are the following connections on the terminal strip:

- 1 analog input with differential signal which can be used as a current input and as a voltage input
- 2 analog inputs (single-ended), which can also be used as digital inputs
- 2 analog outputs

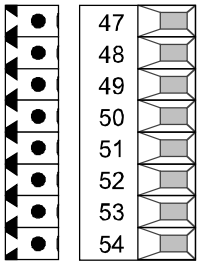

Terminal	Designation	Significance	Range
47	AO1	Analog output 1	± 10 V, 5 mA
48	AO2	Analog output 2	± 10 V, 5 mA
49	AOM	Ground analog output	0 V
50	AI1P	Analog input 1 +	Voltage: ± 10 V, 40 kΩ
51	AI1N	Analog input 1 -	Current: ± 20 mA, 250 Ω
52	AI2	Analog input 2	± 10 V, 40 kΩ
53	AI3	Analog input 3	± 10 V, 40 kΩ
54	AIM	Ground analog input	0 V

Connectable cross-section: 1.5 mm² (AWG 16)

The ground cables are protected by a reactor.

Terminal 47 is at the top when installed.

Table 4-2 Terminal assignment at connection X481

Jumper settings

Analog input 1 can be used as a voltage input or as a current input.
Analog inputs 2 and 3 can also be used as digital inputs. The switching threshold is 8 V.
Switchover is made via jumpers on the lower section of the board. The assignment is shown in the following table:

Connector	Significance
X486	Digital/analog input switchover at AI2
• Jumper 1 + 2	• Digital input
• Jumper 2 + 3	• Analog input
X487	Digital/analog input switchover at AI3
• Jumper 1 + 2	• Digital input
• Jumper 2 + 3	• Analog input
X488	Current/voltage input switchover at AI1P, AI1N
• Jumper 1 + 2	• Current input
• Jumper 2 + 3	• Voltage input

Table 4-3 Jumper settings

5 Start-up

After installation of the EB1 terminal expansion board has been completed, an automatic self-test is carried out when the basic unit (converter/inverter) is powered up.

If you want to use an input or output of the optional board, you have to activate the respective function block.

NOTES

Please bear in mind that if two EB1 terminal expansions are installed, each board is provided with its own parameter set.

Please refer to the Compendium for further information regarding parameterization of the EB1 terminal expansion board.

Bisher sind folgende Ausgaben erschienen:
The following editions have been published so far:

Ausgabe Edition	Interne Sachnummer Internal Item Number
AA	477 791 4070 76 J AA-74

Ausgabe AA besteht aus folgenden Kapiteln:
Version AA consists of the following chapters:

	Kapitel	Chapter	Seitenzahl Pages	Ausgabedatum Version date
0	Definitionen und Warnungen	Definitions and warnings	4	11.97
1	Beschreibung	Description	2	11.97
2	Technische Daten	Technical Data	3	11.97
3	Montage	Installation	1	11.97
4	Anschließen	Connecting-up	5	11.97
5	Inbetriebsetzung	Start-up	1	11.97

Automation und Drives
Drehzahlveränderbare Antriebe
Postfach 3269, D-91050 Erlangen

Siemens Aktiengesellschaft

Änderungen vorbehalten

Printed in the federal Republic of Germany
11.97

SIEMENS

SIMOVERT MASTERDRIVES

Betriebsanleitung
Operating Instructions

EB2 - Expansion Board 2

Ausgabe / Edition: AB

477 792 4070 76 J AB-74

Contents

0 Definitions and Warnings 0-1

1 Description 1-1

2 Technical Data 2-1

3 Installation 3-1

4 Connecting-up 4-1

5 Start-up 5-1

0 Definitions and Warnings

Qualified personnel

For the purpose of this documentation and the product warning labels, a "Qualified person" is someone who is familiar with the installation, mounting, start-up, operation and maintenance of the product. He or she must have the following qualifications:

- Trained or authorized to energize, de-energize, ground and tag circuits and equipment in accordance with established safety procedures .
- Trained or authorized in the proper care and use of protective equipment in accordance with established safety procedures.
- Trained in rendering first aid.



DANGER

For the purpose of this documentation and the product warning labels, "Danger" indicates death, severe personal injury or substantial property damage will result if proper precautions are not taken.



WARNING

For the purpose of this documentation and the product warning labels, "Warning" indicates death, severe personal injury or property damage can result if proper precautions are not taken .



CAUTION

For the purpose of this documentation and the product warning labels, "Caution" indicates that minor personal injury or material damage can result if proper precautions are not taken.

NOTE

For the purpose of this documentation, "Note" indicates important information about the product or about the respective part of the documentation which is essential to highlight.



WARNING

- Hazardous voltages are present in this electrical equipment during operation.
- Non-observance of the warnings can thus result in severe personal injury or property damage.
- Only qualified personnel should work on or around the equipment
- This personnel must be thoroughly familiar with all warning and maintenance procedures contained in this documentation.
- The successful and safe operation of this equipment is dependent on correct transport, proper storage and installation as well as careful operation and maintenance.



CAUTION

Components which can be destroyed by electrostatic discharge (ESD)

The board contains components which can be destroyed by electrostatic discharge. These components can be easily destroyed if not carefully handled. If you have to handle electronic boards, please observe the following:

- Electronic boards should only be touched when absolutely necessary .
- The human body must be electrically discharged before touching an electronic board.
- Boards must not come into contact with highly insulating materials - e.g. plastic parts, insulated desktops, articles of clothing manufactured from man-made fibers.
- Boards must only be placed on conductive surfaces .
- Boards and components should only be stored and transported in conductive packaging (e.g. metalized plastic boxes or metal containers).
- If the packing material is not conductive, the boards must be wrapped with a conductive packaging material, e.g. conductive foam rubber or household aluminium foil.

The necessary ESD protective measures are clearly shown in the following diagram:

- a = Conductive floor surface
- b = ESD table
- c = ESD shoes
- d = ESD overall
- e = ESD chain
- f = Cubicle ground connection

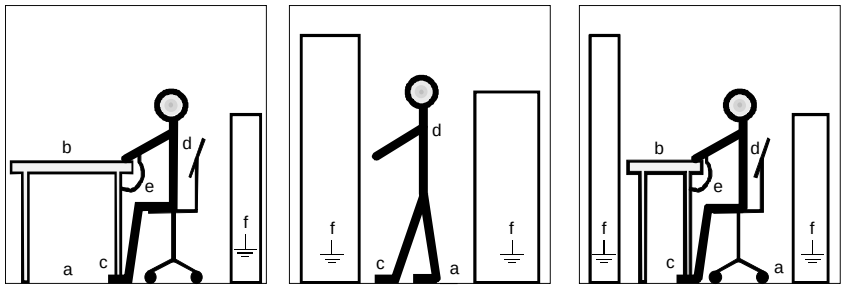

Fig. 0-1 ESD protective measures

1 Description

Range of application

The digital and analog inputs and outputs can be expanded with Expansion Board 2 (EB2).

The EB2 optional board has the following:

- 2 digital inputs
- 24 V voltage supply for the digital inputs
- 1 relay output with changeover contacts
- 3 relay outputs with NO contact
- 1 analog input with differential signal, which can be used as a current input and as a voltage input
- 1 analog output which can be used as a current output and as a voltage output

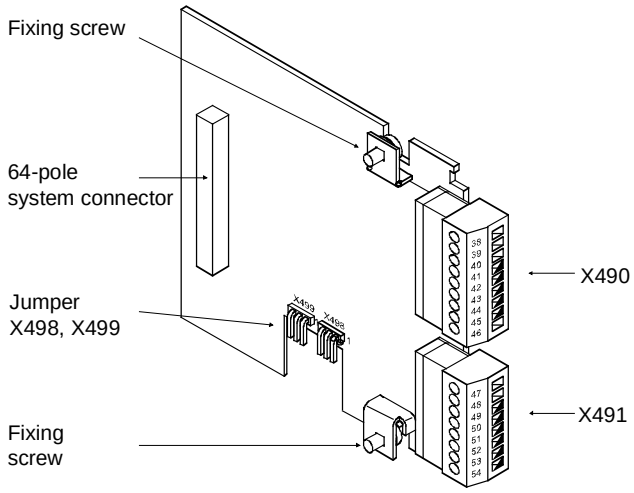

Fig. 1-1 View of the EB2 optional board

2 Technical Data

Order number	6SE7090-0XX84-0KC0
Size (length x width)	90 mm x 83 mm
Pollution degree	Pollution degree 2 acc. to IEC 664-1 (DIN VDE 0110/T1), moisture condensation is not permissible in operation
Mechanical strength During stationary operation - Deflection - Acceleration During transport - Deflection - Acceleration	Acc. to DIN IEC 68-2-6 (for correctly installed board) 0.15 mm in frequency range 10 Hz to 58 Hz 19.6 m/s² in frequency range > 58 Hz to 500 Hz 3.5 mm in frequency range 5 Hz to 9 Hz 9.8 m/s² in frequency range > 9 Hz to 500 Hz
Climate class	Class 3K3 to DIN IEC 721-3-3 (in operation)
Type of cooling	Natural-air cooling
Permissible ambient or coolant temperature - during operation - during storage - during transport	 0° C to +70° C (32° F to 158° F) -25° C to +70° C (-13° F to 158° F) -25° C to +70° C (-13° F to 158° F)
Permissible humidity rating	Relative air humidity ≤ 95 % during transport and storage ≤ 85 % in operation (condensation not permissible)

Table 2-1 General technical data

Digital inputs	DI1, DI2, DIM
• Voltage range LOW	0 V (- 33 V ... + 5 V)
• Voltage range HIGH	+ 24 V (+ 13 V ... + 33 V)
• Input resistance	4 kΩ
• Smoothing	250 µs
• Electrical isolation	none
Digital outputs (relay)	**DO1, DO2, DO3, DO4**
• Type of contact	Changeover / NO contact
• Max. switching voltage	60 V AC, 60 V DC
• Max. switching capacity - at 60 V AC:	 16 VA (cos φ = 0,4) 60 VA (cos φ = 1,0)
- at 60 V DC:	24 W
• Necessary minimum load	1 mA, 1 V

Analog input (differential input)	AI1P, AI1N
• Input range Voltage Current	 ± 10.0 V (± 1 V reserve) ± 20 mA (± 2 mA reserve)
• Input resistance Voltage Current	 40 kΩ to ground 250 Ω to ground
• Hardware smoothing	200 µs
• Resolution	11 bit + sign
Analog output Current or voltage signal	AO, AOM
• Voltage signal	± 10.0 V / ± 5 mA
• Current signal	± 20 mA at 500 Ω
• Hardware smoothing	10 µs
• Resolution	9 bit + sign

Table 2-2 Technical data of EB2

3 Installation

If the inverters/converters are ordered with optional functions, the optional boards are already installed in the units when they are delivered.

It is possible to retrofit optional boards and this can be carried out by the user.

For this purpose, there are either three or up to six slots on the basic unit depending on the type of construction for mounting the optional boards.

An exact description of installation is included with the relevant basic unit. As the unit has to be removed and opened in order to install optional boards, attention must be paid to the ESD measures. Please refer to the operating instructions of the basic unit in this regard.

NOTE

Generally, you can install the EB2 optional board in every slot. However, bear in mind that a sensor board always requires slot C.

A maximum of two EB2s can be installed per unit.

4 Connecting-up

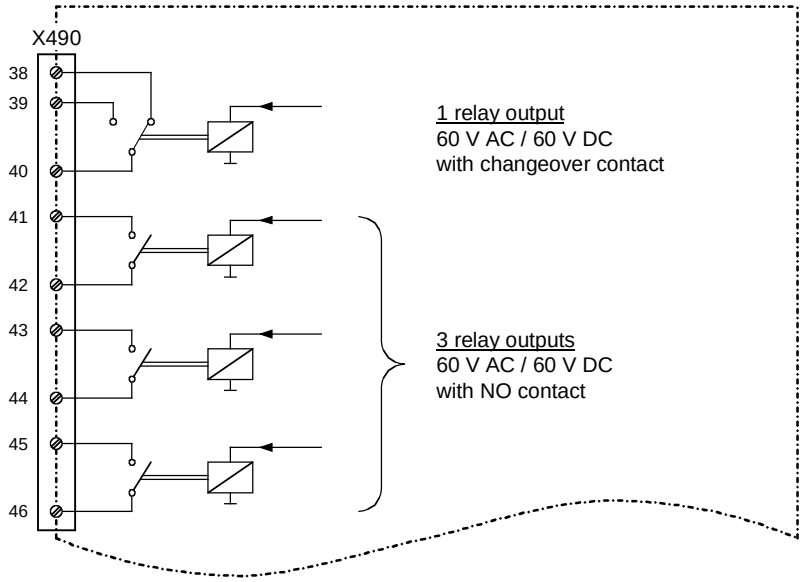

Fig. 4-1 X490 connection overview

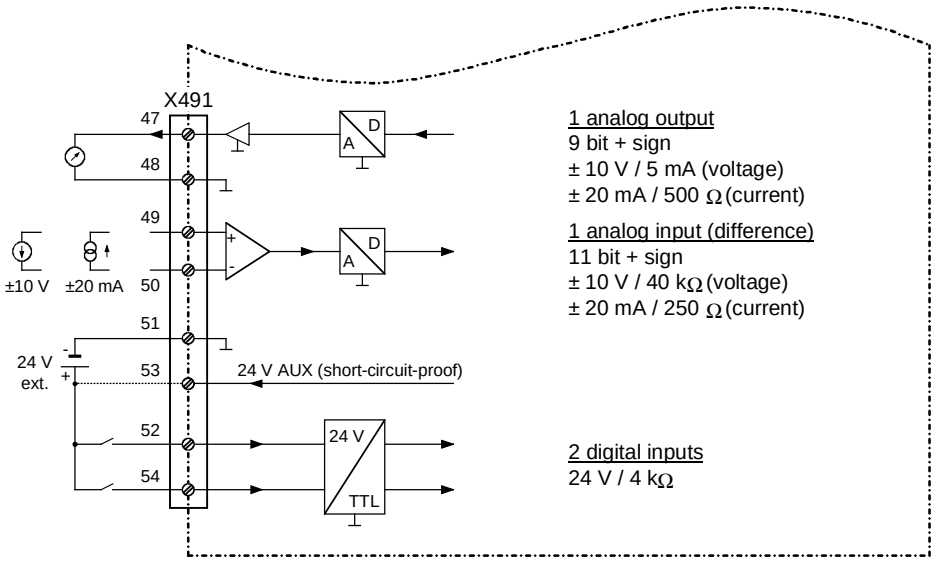

Fig. 4-2 X491 connection overview

X490 - Relay outputs

The following connections are provided on the terminal strip:

- 1 relay output (changeover contact)
- 3 relay outputs (NO contact)

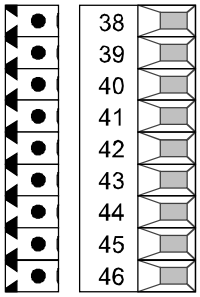

Terminal	Designation	Significance
38	DO13	Relay output 1, NC contact
39	DO12	Relay output 1, NO contact
40	DO11	Relay output 1, reference contact
41	DO22	Relay output 2, NO contact
42	DO21	Relay output 2, reference contact
43	DO32	Relay output 3, NO contact
44	DO31	Relay output 3, reference contact
45	DO42	Relay output 4, NO contact
46	DO41	Relay output 4, reference contact

Connectable cross-section: 1.5 mm² (AWG 16)

Terminal 38 is at the top when installed.

Table 4-1 Terminal assignment at connection X490

X491 - Analog input and output, digital inputs

There are the following connections on the terminal strip:

- 1 analog input (current or voltage)
- 1 analog output (current or voltage)
- 2 digital inputs

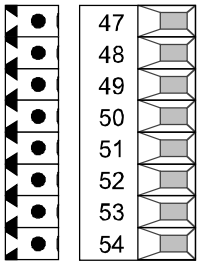

Terminal	Designation	Significance	Range
47	AO	Analog output	Voltage: ± 10 V, 5 mA
48	AOM	Ground analog output	Current: ± 20 mA, 500 Ω
49	AI1P	Analog input +	Voltage: ± 10 V, 40 kΩ
50	AI1N	Analog input -	Current: ± 20 mA, 250 Ω
51	DIM	Ground digital input	0 V
52	P24AUX	24 V supply	24 V, 150 mA
53	DI1	Digital input 1	24 V, 4 kΩ
54	DI2	Digital input 2	24 V, 4 kΩ

Connectable cross-section: 1.5 mm² (AWG 16)

The ground cables are protected by a reactor.

Terminal 47 is at the top when installed.

Table 4-2 Terminal assignment of connection X491

NOTE

The current which is output via connection P24AUX - total current of all optional boards - must not exceed 150 mA!

Loadability of the relay contacts:

Type of contact	Changeover contact
Maximum switching voltage	60 V AC, 60 V DC
Maximum switching capacity	16 VA at 60 V AC (cos φ = 0.4) 60 VA at 60 V AC (cos φ = 1.0) 24 W at 60 V DC
Required minimum load	1 mA, 1 V

Jumper settings

The analog input can be used as a voltage input or as a current input.
The analog output can be used as a voltage output or as a current output.
Switchover is made via jumpers on the lower section of the board. The assignment is shown in the following table:

Connector	Significance
X498	Current/voltage input switchover at AI1
• Jumper 1 + 2	• Current input
• Jumper 2 + 3	• Voltage input
X499	Current/voltage output switchover at AO
• Jumper 1 + 2	• Current output
• Jumper 2 + 3	• Voltage output

Table 4-3 Jumper settings

5 Start-up

After installation of the EB2 terminal expansion board has been completed, an automatic self-test is carried out when the basic unit (converter/inverter) is powered up.

If you want to use an input or output of the optional board, you have to activate the respective function block.

NOTES

Please bear in mind that if two EB2 terminal expansions are installed, each board is provided with its own parameter set.

Please refer to the Compendium for further information regarding parameterization of the EB2 terminal expansion board.

Bisher sind folgende Ausgaben erschienen:
The following editions have been published so far:

Ausgabe Edition	Interne Sachnummer Internal Item Number
AA	477 792 4070 76 J AA-74
AB	477 792 4070 76 J AB-74

Ausgabe AB besteht aus folgenden Kapiteln:
Version AB consists of the following chapters:

	Kapitel	Chapter	Seitenzahl Pages	Ausgabedatum Version date
0	Definitionen und Warnungen	Definitions and warnings	4	06.98
1	Beschreibung	Description	2	06.98
2	Technische Daten	Technical Data	3	06.98
3	Montage	Installation	1	06.98
4	Anschließen	Connecting-up	5	06.98
5	Inbetriebsetzung	Start-up	1	06.98

Group: Automation und Drives (A&D)
Division: Variable-Speed Drive Systems
Postfach 3269, D-91050 Erlangen

Siemens Aktiengesellschaft

Subject to change

Printed in the federal Republic of Germany
06.98

Betriebsanleitung / Operating Instructions Ausgabe/Edition: AD

simovert masterdrives

SIEMENS

Resolver-Interface – RIF

Contents

1 DEFINITIONS AND WARNINGS 1-1

2 PRODUCT DESCRIPTION 2-1

2.1 RIF 2-1

2.2 RIF2 2-3

3 INSTALLATION, CONNECTING-UP 3-1

3.1 RIF 3-1

3.2 RIF2 3-3

4 COMMISSIONING 4-1

4.1 Troubleshooting 4-2

5 TECHNICAL DATA 5-1

5.1 RIF layout diagram 5-1

5.2 RIF2 layout diagram 5-2

1 Definitions and Warnings

Qualified personnel

For the purpose of this documentation and the product warning labels, a "Qualified person" is someone who is familiar with the installation, mounting, start-up, operation and maintenance of the product. He or she must have the following qualifications:

- Trained or authorized to energize, de-energize, ground and tag circuits and equipment in accordance with established safety procedures.
- Trained or authorized in the proper care and use of protective equipment in accordance with established safety procedures.
- Trained in rendering first aid.

DANGER



indicates an **imminently** hazardous situation which, if not avoided, will result in death, serious injury and considerable damage to property.

WARNING



indicates a **potentially** hazardous situation which, if not avoided, could result in death, serious injury and considerable damage to property.

CAUTION



used with the safety alert symbol indicates a potentially hazardous situation which, if not avoided, may result in minor or moderate injury.

CAUTION

used without safety alert symbol indicates a potentially hazardous situation which, if not avoided, may result in property damage.

NOTICE

NOTICE used without the safety alert symbol indicates a potential situation which, if not avoided, may result in an undesirable result or state.

NOTE

For the purpose of this documentation, "Note" indicates important information about the product or about the respective part of the documentation which is essential to highlight.

WARNING



Hazardous voltages are present in this electrical equipment during operation.

Non-observance of the warnings can thus result in severe personal injury or property damage.

Only qualified personnel should work on or around the equipment

This personnel must be thoroughly familiar with all warning and maintenance procedures contained in this documentation.

The successful and safe operation of this equipment is dependent on correct transport, proper storage and installation as well as careful operation and maintenance.

NOTE

This documentation does not purport to cover all details on all types of the product, nor to provide for every possible contingency to be met in connection with installation, operation or maintenance.

Should further information be desired or should particular problems arise which are not covered sufficiently for the purchaser's purposes, the matter should be referred to the local SIEMENS sales office.

The contents of this documentation shall not become part of or modify any prior or existing agreement, commitment or relationship. The sales contract contains the entire obligation of SIEMENS AG. The warranty contained in the contract between the parties is the sole warranty of SIEMENS AG. Any statements contained herein do not create new warranties or modify the existing warranty.

Proper use of Siemens products

WARNING



Siemens products may only be used for the applications described in the catalog and in the relevant technical documentation. If products and components from other manufacturers are used, these must be recommended or approved by Siemens. Proper transport, storage, installation, assembly, commissioning, operation and maintenance are required to ensure that the products operate safely and without any problems. The permissible ambient conditions must be adhered to. The information in the relevant documentation must be observed.

CAUTION



Components which can be destroyed by electrostatic discharge (ESD)

The board contains components which can be destroyed by electrostatic discharge. These components can be easily destroyed if not carefully handled. If you have to handle electronic boards, please observe the following:

Electronic boards should only be touched when absolutely necessary.

The human body must be electrically discharged before touching an electronic board.

Boards must not come into contact with highly insulating materials - e.g. plastic parts, insulated desktops, articles of clothing manufactured from man-made fibers.

Boards must only be placed on conductive surfaces.

Boards and components should only be stored and transported in conductive packaging (e.g. metalized plastic boxes or metal containers).

If the packing material is not conductive, the boards must be wrapped with a conductive packaging material, e.g. conductive foam rubber or household aluminium foil.

The necessary ESD protective measures are clearly shown again in the following diagram:

- a = Conductive floor surface
- b = ESD table
- c = ESD shoes
- d = ESD overall
- e = ESD chain
- f = Cubicle ground connection

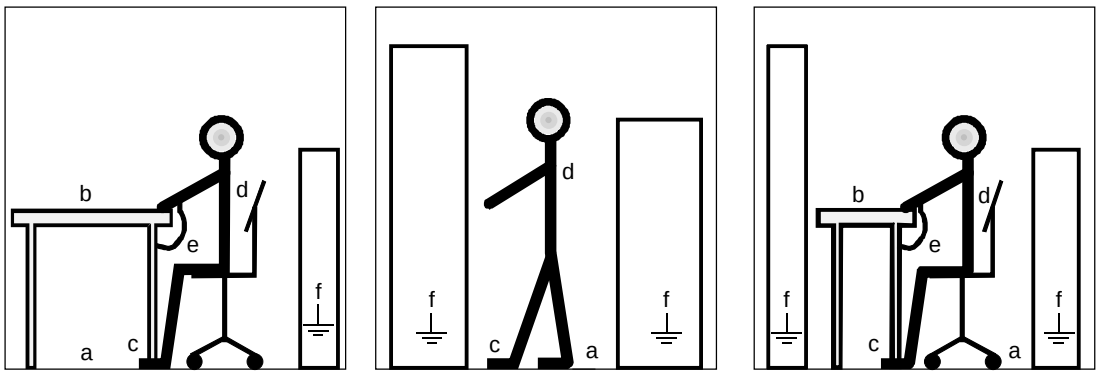

ESD protective measures

Residual risks of Power Drive Systems (PDS)

DANGER



The components for the controller and drive of a Power Drive System (PDS) are authorized for industrial and commercial use in industrial networks. Their use in public networks requires a different planning and/or additional measures.

It is only permissible to operate these components in enclosed housings or in superordinate control cabinets and when all protective devices and protective covers are used.

These components may only be handled by qualified and trained specialist persons who are familiar with and observe all the safety instructions on the components and in the relevant technical user documentation.

The machine manufacturer must take into account the following residual risks resulting from the components for the controller and drive of a Power Drive System (PDS) when evaluating the risk of his machine in accordance with the EC machinery guideline.

1. Undesired movements of driven machine components during commissioning, operation, maintenance and repair, e.g. as a result of
   - HW and/or SW errors in the sensors, controller, actuators and connection system
   - Reaction times of the controller and the drive
   - Operation and/or ambient conditions not compliant with the specification
   - Errors in parameterization, programming, wiring and installation
   - Use of radio units/mobile phones in the direct vicinity of the controller
   - External influences/damage.
2. Extraordinary temperatures and emissions of light, noises, particles and gases, e.g. as a result of
   - Component failure
   - Software errors
   - Operation and/or ambient conditions not compliant with the specification
   - External influences/damage.
3. Dangerous contact voltages, e.g. as a result of
   - Component failure
   - Influence upon electrostatic charging
   - Induction of voltages in the case of moving motors
   - Operation and/or ambient conditions not compliant with the specification
   - Condensation/conductive contamination
   - External influences/damage.
4. Operational electrical, magnetic and electromagnetic fields that may pose a risk to people with a pacemaker, implants or metallic items if they are too close.
5. Release of pollutants and emissions if components are not operated or disposed of properly.

For additional information on the residual risks emanating from the components of the PDS, please refer to the relevant chapters of the technical user documentation.

DANGER



Electrical, magnetic and electromagnetic fields (EMF) that occur during operation can pose a danger to persons who are present in the direct vicinity of the product – especially persons with pacemakers, implants, or similar devices.

The relevant directives and standards must be observed by the machine/plant operators and persons present in the vicinity of the product. These are, for example, EMF Directive 2004/40/EEC and standards EN 12198-1 to -3 pertinent to the European Economic Area (EEA), as well as accident prevention code BGV 11 and the associated rule BGR 11 "Electromagnetic fields" of the German employer's liability accident insurance association pertinent to Germany.

These state that a hazard analysis must be drawn up for every workplace, from which measures for reducing dangers and their impact on persons are derived and applied, and exposure and danger zones are defined and observed.

The safety information in the Storage, Transport, Installation, Commissioning, Operation, Maintenance, Disassembly and Disposal sections must also be taken into account.

2 Product Description

The "resolver interface" (RIF) board is a functional expansion to sense speeds using a resolver. The resolver field voltage is generated on the RIF board. The resolver position signals are converted into digital track signals of an incremental encoder on the RIF.

There are two versions of the RIF board:

RIF	6SE7087-0XX84-3DD0	for rail-mounting
RIF2	6SE7087-0XX84-0BB0	for mounting in the electronics box

2.1 RIF

RIF-board inputs and outputs		
Terminal strip		**Description**
Resolver connection	-X401	Resolver (field and position signals)
Outputs of the incremental encoder simulation	-X403	♦ to the control board (CU2 / CUVC) or ♦ to the "tachometer and synchronization board" (TSY) or ♦ to the technology board (T300)
External supply	-X404	24 V, 200 mA

NOTE An external supply is only required if the incremental encoder signals are to be distributed over several parallel incremental encoder inputs.

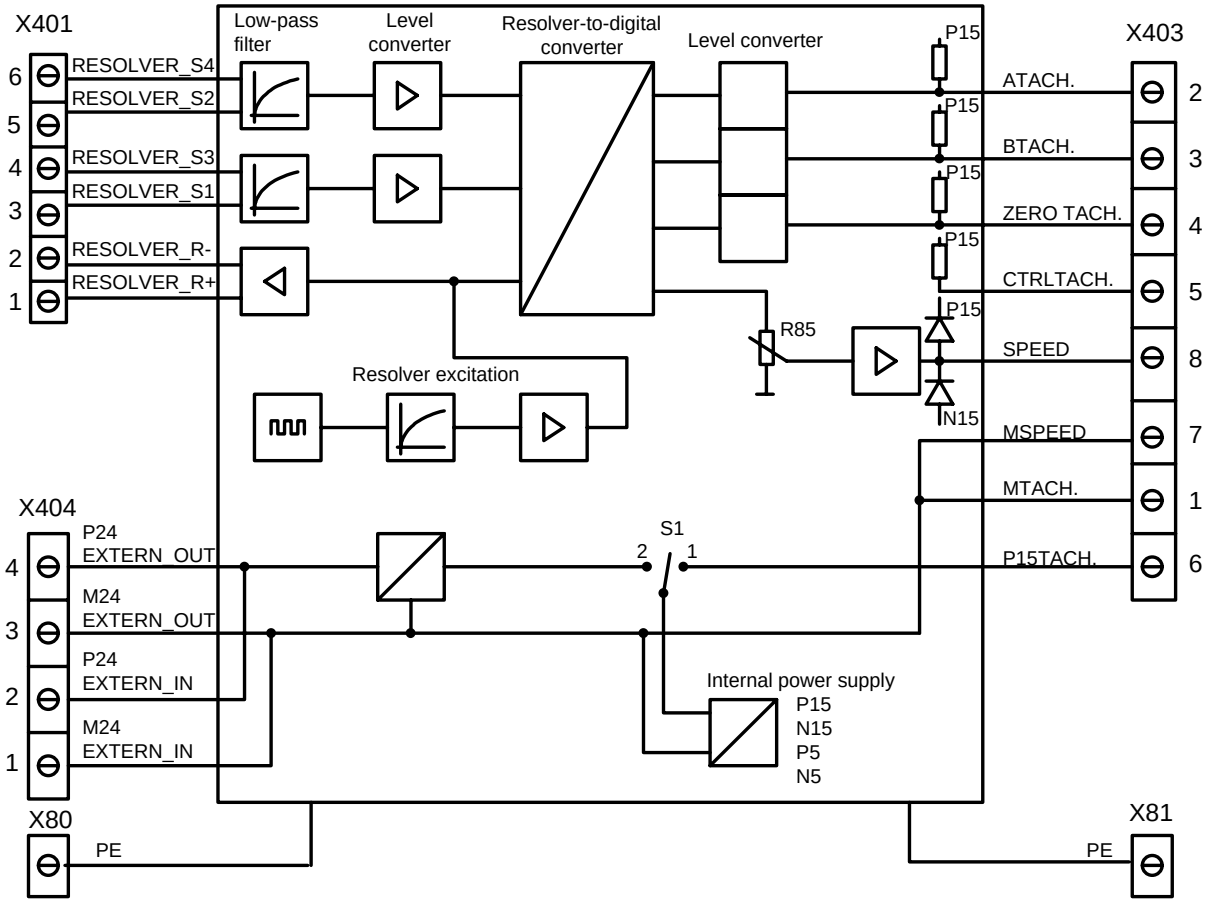

Fig. 2-1 RIF block diagram

2.2 RIF2

RIF2 board inputs and outputs			
Terminal strip		**Description**	
Resolver connection	-X401	Resolver (field and position signals)	DSUB-9
Resolver connection	-X402	Resolver (field and position signals)	DSUB-26 high density
Output of the incremental encoder simulation	-X403	♦ to control board (CU2 / CUVC) or ♦ to technology board (T300)	

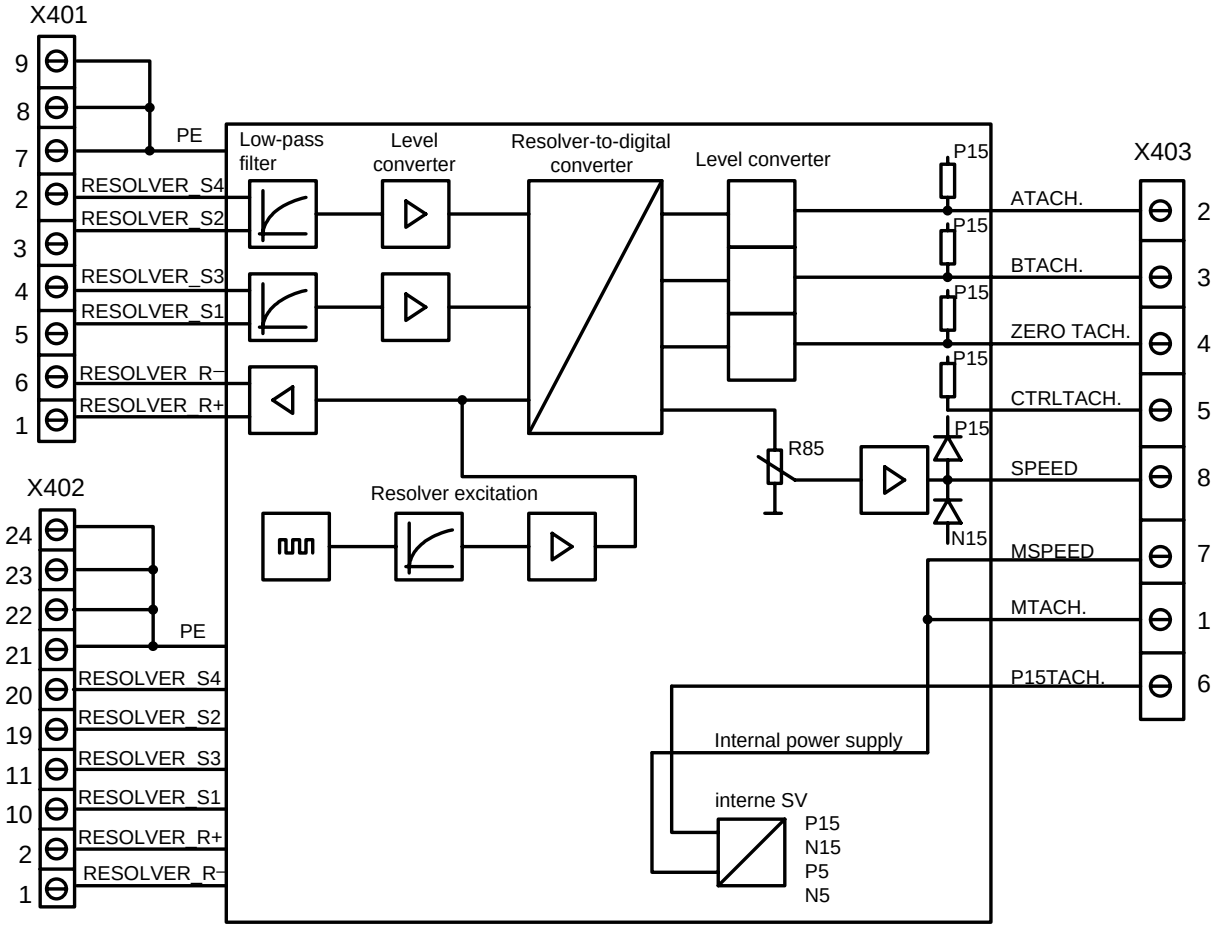

Fig. 2-2 RIF2 block diagram

3 Installation, Connecting-up

3.1 RIF

The board is installed by snapping it onto a previously mounted DIN mounting rail. The cabling to the components must be established on the plant side.

NOTES

The board does not provide protection against direct contact.
Protection against direct contact (shock protection) must be ensured by incorporating it in a housing or in a higher-level system (e.g. cabinet).

Shielded cables must be used, and the board must be grounded at X80 or X81 in order to prevent EMC noise.

Perfect functioning of the board cannot be guaranteed if the permissible cable length is exceeded.

Power and control cables must be separately routed.

Terminal	Signal name	Function	Conductor cross-section	
			mm^2	AWG*)
X401:		**Resolver**		
1	RESOLVER_R+	Resolver field	0.5 to 1.5	20 to 14
2	RESOLVER_R-	Reference potential, resolver field	0.5 to 1.5	20 to 14
3	RESOLVER_S1	COSINE resolver outputs	0.5 to 1.5	20 to 14
4	RESOLVER_S3	Reference potential, COSINE resolver output	0.5 to 1.5	20 to 14
5	RESOLVER_S2	SINE resolver outputs	0.5 to 1.5	20 to 14
6	RESOLVER_S4	Reference potential, SINE resolver output	0.5 to 1.5	20 to 14
X403:		**CU2 / CUVC, TSY or T300**		
1	MTACHO	Reference signal	0.5 to 1.5	20 to 14
2	ATACHO	Pulse track A	0.5 to 1.5	20 to 14
3	BTACHO	Pulse track B	0.5 to 1.5	20 to 14
4	NULLTACHO	Position track	0.5 to 1.5	20 to 14
5	CTRLTACHO	Tachometer monitoring signal	0.5 to 1.5	20 to 14
6	P15TACHO	15 V power supply	0.5 to 1.5	20 to 14
7	DREHZAHL	Analog speed actual value	0.5 to 1.5	20 to 14
8	MDREHZAHL	Reference potential, analog speed actual value	0.5 to 1.5	20 to 14
X404:		**External 24 V supply**		
1	M24EXTERN_IN	Reference potential	0.5 to 1.5	20 to 14
2	P24EXTERN_IN	Power supply voltage	0.5 to 1.5	20 to 14
3	M24EXTERN_OUT	Looped-through reference potential	0.5 to 1.5	20 to 14
4	P24EXTERN_OUT	Looped-through power supply voltage	0.5 to 1.5	20 to 14

*) American Wire Gauge

Table 3-1 RIF connecting terminals

3.2 RIF2

The LBA (Local Bus Adapter) must be mounted in the electronics box to enable the RIF2 board to be installed in the electronics box. The board is then inserted in slot 3. The component cabling must be realized on the plant side.

Installing the LBA bus expansion

- Remove the CU board using the handles (at the lefthand slot in the electronics box) after releasing the connecting cable to the PMU and the two retaining bolts.
- Insert and lock-in the bus expansion LBA in the electronics box (position refer to the diagram).
- Re-insert the CU board into the lefthand slot, tighten-up the retaining bolts at the handles, insert the connecting cable to the PMU.

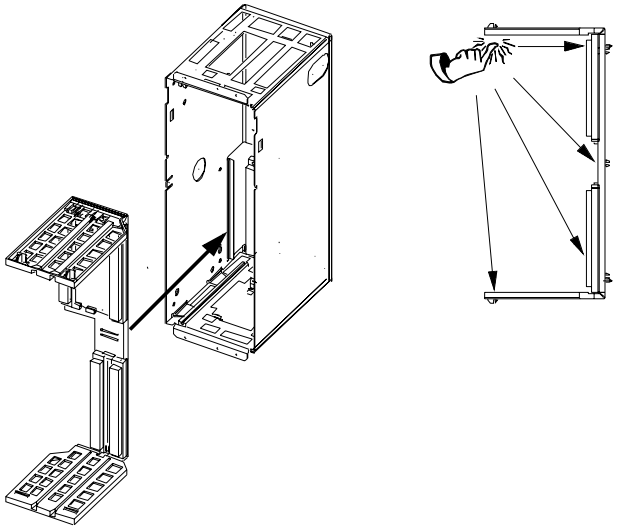

Fig. 3-1 Installing the Local Bus Adapter

NOTES

If the resolver is connected through X401, it should be ensured that the outside of the connector housing is not conductive (e.g. is not metallized).

Shielded cables must be used and the board must be screwed into the electronics box using the screws provided in order to prevent EMC noise.

Perfect functioning of the board cannot be guaranteed if the permissible cable length is exceeded.

Power and control cables must be separately routed.

Terminal	Signal name	Function	Conductor cross-section	
			mm^2	AWG*)
X401:		**Resolver(DSUB-9)**		
1	RESOLVER_R+	Resolver field	0.5 to 1.5	20 to 14
2	RESOLVER_S4	Reference potential, SINE resolver field	0.5 to 1.5	20 to 14
3	RESOLVER_S2	SINE resolver output	0.5 to 1.5	20 to 14
4	RESOLVER_S3	Reference potential, COSINE resolver output	0.5 to 1.5	20 to 14
5	RESOLVER_S1	COSINE resolver output	0.5 to 1.5	20 to 14
6	RESOLVER_R-	Reference potential, resolver field	0.5 to 1.5	20 to 14
7	PE	Inner shield connection		
8	PE	Inner shield connection		
9	PE	Inner shield connection		
X402:		**Resolver (DSUB-26 High Density)**		
1	RESOLVER_R-	Reference potential, SINE resolver field	0.5 to 1.5	20 to 14
2	RESOLVER_R+	Resolver field	0.5 to 1.5	20 to 14
10	RESOLVER_S1	COSINE resolver outputs	0.5 to 1.5	20 to 14
11	RESOLVER_S3	Reference potential, COSINE resolver output	0.5 to 1.5	20 to 14
19	RESOLVER_S2	SINE resolver output	0.5 to 1.5	20 to 14
20	RESOLVER_S4	Reference potential, SINE resolver field	0.5 to 1.5	20 to 14
21	PE	Inner shield connection		
22	PE	Inner shield connection		
23	PE	Inner shield connection		
24	PE	Inner shield connection		
X403:		**CU2 / CUVC or T300**		
1	MTACHO	Reference signal	0.5 to 1.5	20 to 14
2	ATACHO	Pulse track A	0.5 to 1.5	20 to 14
3	BTACHO	Pulse track B	0.5 to 1.5	20 to 14
4	NULLTACHO	Position track	0.5 to 1.5	20 to 14
5	CTRLTACHO	Tachometer monitoring signal	0.5 to 1.5	20 to 14
6	P15TACHO	15 V power supply	0.5 to 1.5	20 to 14
7	DREHZAHL	Analog speed actual value	0.5 to 1.5	20 to 14
8	MDREHZAHL	Reference potential, analog speed actual value	0.5 to 1.5	20 to 14

*) American Wire Gauge

Table 3-2 RIF2 connecting terminals

4 Commissioning

Check the existing board combinations (dependent on the particular configuration)

- CU1 and TSY (only with RIF)
- CU2 / CUVC (RIF or RIF2)
- T300 (RIF or RIF2)

Commissioning steps

- Define the power supply source:
  - to adjust S1 refer to Table 4-1 (only RIF)
- Define the resolver type (field voltage, field frequency, ratio)
- Adjust the field voltage using S2, so that the resolver position signals do not exceed 2.2 V_{RMS}:
  - $V_{field(max)}$ <= $ü_{res}$ · 2.2 V
  - to adjust S2, refer to Table 4-2
  - adjust the field frequency using S3 (refer to Table 4-3)
- X401: RIF: RIF: Connect-up the resolver,
  RIF2: Connect-up the resolver with DSUB-9
- X402: Alternative for RIF2: Connect-up the resolver with DSUB-26
- X403: Connect-up CU2 / CUVC or TSY (only RIF) or T300
- X404: If required connect-up the external power supply (only RIF).
- Check the shield and grounding of the board at both ends.
- Parameterizing the control board:
  - CU2: Set parameter P208 to "digital tachometer" (P208 = 1). Enter the pulse number in parameter P209 (Table 4-4)
  - CUVC: Set parameter P130 to "pulse encoder" (P130 = 11). Enter the pulse number in parameter P151 (Table 4-4)

S1 (only RIF)	Define the RIF board power supply
Setting 1	Supplied via X403 through CU2 / CUVC / TSY / T300
Setting 2	Supply via X404 from an external 24 V power supply

Table 4-1

S2	Setting the field voltage (Voltages are valid for f = 10 kHz, at 5 kHz, they are increased by approx. 13%, and at 2.5 kHz, by approx. 17 %)
S2.1 closed S2.2 closed	Field voltage = 4.1 V
S2.1 open S2.2 closed	Field voltage = 4.7 V
S2.1 closed S2.1 open	Field voltage = 5.5 V
S2.1 open S2.2 open	Field voltage = 6.8 V

Table 4-2

S3	Setting the field frequency
S3.1 closed S3.2 open S3.3 open	Field frequency = 10 KHz
S3.1 open S3.2 closed S3.3 open	Field frequency = 5 KHz
S3.1 open S3.2 open S3.3 closed	Field frequency = 2.5 KHz

Table 4-3

Resolver pole pair number	Pulse number of the emulated incremental encoder (P209 / P151)
1	1024
2	2048
3	3072
4	4096

Table 4-4

4.1 Troubleshooting

If the measured speed value fluctuates significantly, the phase shift of the resolver position signals can be corrected using R85.

5 Technical Data

Board		RIF (Resolver-Interface)	RIF2 (Resolver-Interface)
Order number		6SE7090-0XX84-3DD0	6SE7090-0XX84-0BB0
Nominal input voltages		15 V ± 15 % , 170 mA via CU2 / CUVC / TSY (only RIF) / T300 or (only for RIF) 24 V ± 20 %, 200 mA via an external power supply	
Output:	Resolver field	4.1 V to 6.8 V, max. 50 mA (RMS values)	
Inputs:	Resolver signals	max. 2.2 V_{RMS} or 6.2 V V_{pp}, approx. 0.5 mA	
Outputs:	Track signals (A, B, etc.)	HTL logic (0 V to 30 V), max. 15 mA	
Output:	Analog speed signal	± 10 V, max. 5 mA (amplitude can be adjusted using R31)	
Dimensions: [mm]	Width Height Depth	160 97 mounting on DIN rail 80	233.4 18 E E-box installation 100

5.1 RIF layout diagram

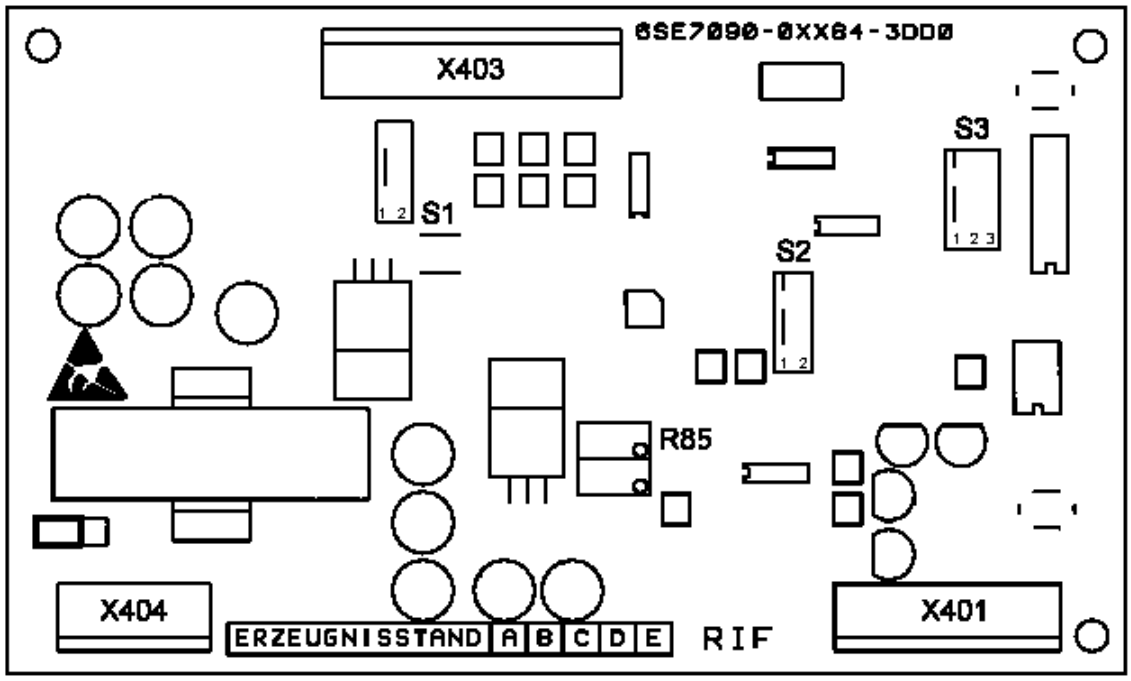

Fig. 5-1 RIF layout diagram

5.2 RIF2 layout diagram

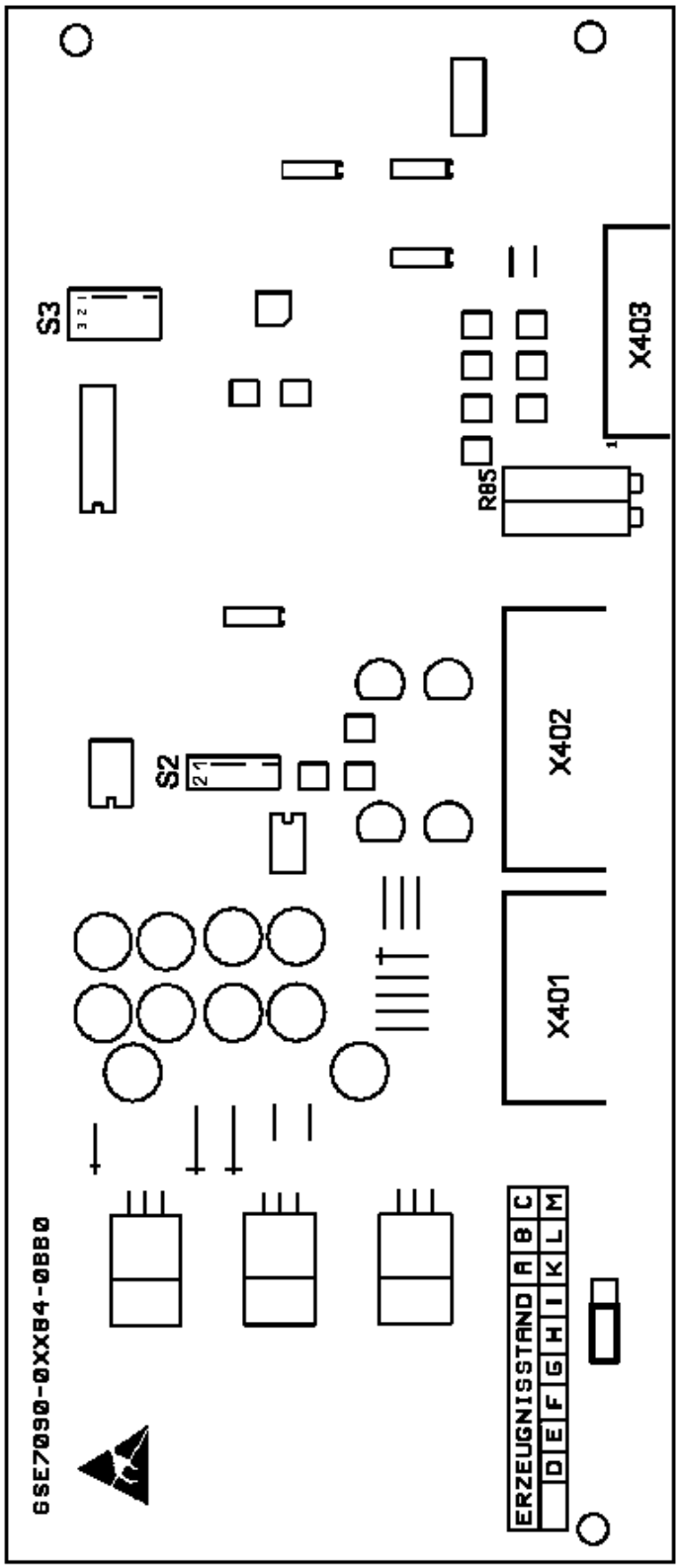

Fig. 5-2 RIF2 layout diagram

Bisher sind folgende Ausgaben erschienen:
The following versions have been published so far:

Ausgabe Version	interne Sachnummer Internal item number
AA	477 433 4000 76 Ja
AB	477 433 4000 76 J AB-76
AC	A5E00388649
AD	A5E00388649

Ausgabe AD besteht aus folgenden Kapiteln:
Version AD consists of the following chapters:

Kapitel		Chapter	Seitenzahl Pages	Ausgabedatum Version date
1	Definitionen	Definitions	5	01.2009
2	Produktbeschreibung	Product Description	3	05.1999
3	Montieren, Anschließen	Installation, Connecting-up	4	05.1999
4	Inbetriebsetzen	Commissioning	2	05.1999
5	Technische Daten	Technical Data	2	05.1999

Änderungen von Funktionen, technischen Daten, Normen, Zeichnungen und Parametern vorbehalten.

We reserve the right to make changes to functions, technical data, standards, drawings and parameters.

Weitergabe sowie Vervielfältigung dieser Unterlage, Verwertung und Mitteilung ihres Inhalts nicht gestattet, soweit nicht ausdrücklich zugestanden. Zuwiderhandlungen verpflichten zu Schadenersatz. Alle Rechte vorbehalten, insbesondere für den Fall der Patenterteilung oder GM-Eintragung.

Wir haben den Inhalt der Druckschrift auf Übereinstimmung mit der beschriebenen Hard- und Software überprüft. Dennoch können Abweichungen nicht ausgeschlossen werden, so dass wir für die vollständige Übereinstimmung keine Garantie übernehmen. Die Angaben in dieser Druckschrift werden jedoch regelmäßig überprüft und notwendige Korrekturen sind in den nachfolgenden Auflagen enthalten. Für Verbesserungsvorschläge sind wir dankbar.

SIMOVERT® ist ein Warenzeichen von Siemens

The reproduction, transmission or use of this document or its contents is not permitted without express written authority. Offenders will be liable for damages. All rights, including rights created by patent grant or registration of a utility model or design, are reserved.

We have checked the contents of this document to ensure that they coincide with the described hardware and software. However, differences cannot be completely excluded, so that we do not accept any guarantee for complete conformance. However, the information in this document is regularly checked and necessary corrections will be included in subsequent editions. We are grateful for any recommendations for improvement.

SIMOVERT® Registered Trade Mark

Siemens AG
Industry Sector
Motion Control Systems
P.O. Box 3180, D – 91050 Erlangen
Germany

www.siemens.com/motioncontrol

© Siemens AG 2009
Subject to change without prior notice
Bestell-Nr./Order No.: 6SE7087-6CX84-3DD0

Printed in Germany

SIEMENS

SIMOVERT MASTERDRIVES

Betriebsanleitung
Operating Instructions

SBM - Encoder-/ Multiturngeberauswertung

SBM - Sensor Board Encoder / Multiturn

Ausgabe / Edition: AB

477 754 4070 76 J AB-74

Contents

0 Definitions and Warnings 0-1

1 Description 1-1

2 Technical Data 2-1

3 Installation 3-1

4 Connecting-up 4-1

5 Start-up 5-1

0 Definitions and Warnings

Qualified personnel

For the purpose of this documentation and the product warning labels, a "Qualified person" is someone who is familiar with the installation, mounting, start-up, operation and maintenance of the product. He or she must have the following qualifications:

- Trained or authorized to energize, de-energize, ground and tag circuits and equipment in accordance with established safety procedures.
- Trained or authorized in the proper care and use of protective equipment in accordance with established safety procedures.
- Trained in rendering first aid.



DANGER

For the purpose of this documentation and the product warning labels, "Danger" indicates death, severe personal injury or substantial property damage will result if proper precautions are not taken.



WARNING

For the purpose of this documentation and the product warning labels, "Warning" indicates death, severe personal injury or property damage can result if proper precautions are not taken.



CAUTION

For the purpose of this documentation and the product warning labels, "Caution" indicates that minor personal injury or material damage can result if proper precautions are not taken.

NOTE

For the purpose of this documentation, "Note" indicates important information about the product or about the respective part of the documentation which is essential to highlight.



WARNING

- Hazardous voltages are present in this electrical equipment during operation.
- Non-observance of the warnings can thus result in severe personal injury or property damage.
- Only qualified personnel should work on or around the equipment
- This personnel must be thoroughly familiar with all warning and maintenance procedures contained in this documentation.
- The successful and safe operation of this equipment is dependent on correct transport, proper storage and installation as well as careful operation and maintenance.



CAUTION

Components which can be destroyed by electrostatic discharge (ESD)

The board contains components which can be destroyed by electrostatic discharge. These components can be easily destroyed if not carefully handled. If you have to handle electronic boards, please observe the following:

- Electronic boards should only be touched when absolutely necessary.
- The human body must be electrically discharged before touching an electronic board.
- Boards must not come into contact with highly insulating materials - e.g. plastic parts, insulated desktops, articles of clothing manufactured from man-made fibers.
- Boards must only be placed on conductive surfaces.
- Boards and components should only be stored and transported in conductive packaging (e.g. metalized plastic boxes or metal containers).
- If the packing material is not conductive, the boards must be wrapped with a conductive packaging material, e.g. conductive foam rubber or household aluminium foil.

The necessary ESD protective measures are clearly shown in the following diagram:

- a = Conductive floor surface
- b = ESD table
- c = ESD shoes
- d = ESD overall
- e = ESD chain
- f = Cubicle ground connection

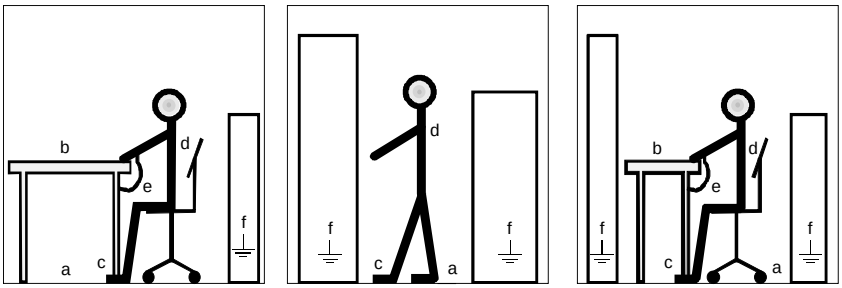

Fig. 0-1 ESD protective measures

1 Description

Range of application

The SBM optional board (Sensor Board Multiturn / sin-/cos-Encoder) enables sin-/cos-encoder phase-angle sensors and multiturn phase-angle sensors to be connected and evaluated.

Encoders with a pulse number from 4 to 16384 are supported.

The usual communication protocols (EnDat and SSI) with baud rates from 100 kHz to 2 MHz are supported for the multiturn phase-angle sensor.

The supply voltage for the encoders can be set to 5 V, 7.5 V or 15 V. By connecting the sense cable, the voltage at the encoder input can be monitored and adjusted in the case of long encoder cables (4-wire principle).

In addition to the processing of encoder signals, the motor temperature is also sensed on this board (either a KTY or a PTC sensor).

The signals A+, A-, B+, B-, zero+ and zero- are provided by the pulse encoder simulation via an additional front connector in accordance with standard RS422. The indicated number of pulses/revolution corresponds to the pulse number of the encoder or the multiturn encoder. The types ERN 1387 / 1381 (sine/cosine encoder) and EQN 1324 (multiturn encoder) each have 2048 pulses.

SBM2

The SBM2 board additionally enables an offset correction of the signals to be made and can therefore be used for an external encoder with a high resolution.

View of the SBM

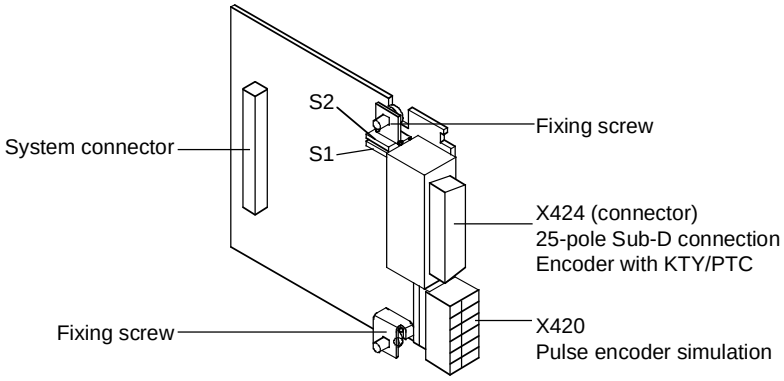

Fig. 1-1 View of the SBM optional board

The hook switches S1 and S2 are for adjusting the encoder supply voltage.

Switch S1	Switch S2	Voltage	
open	open	5 V	(factory setting)
open	closed	7.5 V	
closed	closed	15 V	

WARNING An incorrectly set supply voltage can cause damage to the encoder!

View of the SBM2

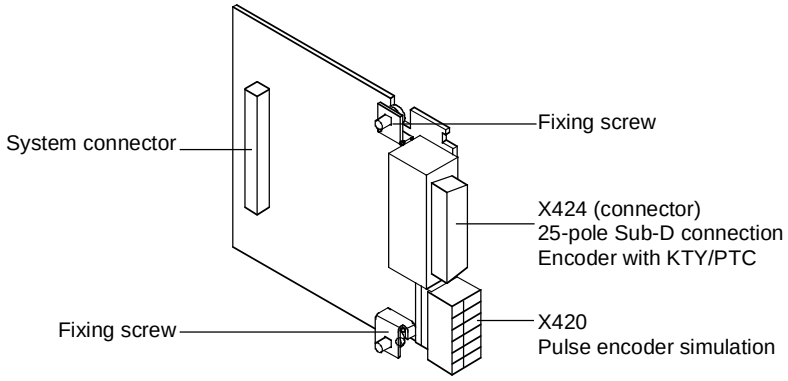

Fig. 1-2 View of the SBM2 optional board

NOTE The encoder supply voltage can be adjusted on the SBM2 optional board by means of parameters.

2 Technical Data

Order number	SBM: 6SE7090-0XX84-0FD0 SBM2: 6SE7090-0XX84-0FE0
Size (length x width)	90 mm x 83 mm
Pollution degree	Pollution degree 2 acc. to IEC 664-1 (DIN VDE 0110/T1), moisture condensation is not permissible in operation
Mechanical strength During stationary operation - Deflection - Acceleration During transport - Deflection - Acceleration	Acc. to DIN IEC 68-2-6 (for correctly installed board) 0.15 mm in frequency range 10 Hz to 58 Hz 19.6 m/s² in frequency range > 58 Hz to 500 Hz 3.5 mm in frequency range 5 Hz to 9 Hz 9.8 m/s² in frequency range > 9 Hz to 500 Hz
Climate class	Class 3K3 to DIN IEC 721-3-3 (in operation)
Type of cooling	Natural-air cooling
Permissible ambient or coolant temperature - during operation - during storage - during transport	 0° C to +70° C (32° F to 158° F) -25° C to +70° C (-13° F to 158° F) -25° C to +70° C (-13° F to 158° F)
Permissible humidity rating	Relative air humidity ≤ 95 % during transport and storage ≤ 85 % in operation (condensation not permissible)

Table 2-1 General technical data

Designation	Value
Encoder supply	5 / 7.5 / 15 V can be switched over, Imax = 390 mA
Motor temperature sensing	PTC / KTY
A+, A- (sine)	1 V_{SS} (0.8 V ... 1.2 V)
B+, B- (cosine)	1 V_{SS} (0.8 V ... 1.2 V)
R+, R- (zero track)	0,5 V_{SS} (0.2 V ... 0.8 V)
C+, C- (1 sine / revolution)	1 V_{SS} (0.8 V ... 1.2 V)
D+, D- (1 cosine / revolution)	1 V_{SS} (0.8 V ... 1.2 V)
Cycle+, Cycle-	100 kHz ... 2 MHz, RS422
Data+, Data-	RS485
Supported protocols	EnDat and SSI
Pulse encoder simulation Tracks A+, A-, B+, B-, zero+, zero-	RS422

Table 2-2 Technical data of the SBM

3 Installation

If the inverters/converters are ordered with optional functions, the optional boards are already installed in the units when they are delivered.

It is possible to retrofit optional boards and this can be carried out by the user.

For this purpose, there are either three or up to six slots on the basic unit depending on the type of construction for mounting the optional boards.

An exact description of installation is included with the relevant basic unit. As the unit has to be removed and opened in order to install optional boards, attention must be paid to the ESD measures. Please refer to the operating instructions of the basic unit in this regard.

NOTE

Generally, you can install the SBM optional board in every slot. However, bear in mind that a sensor board always requires slot C.

4 Connecting-up

The optional board is provided with the following connections for the signal cables:

- X424 Encoder connection (encoder or multiturn encoder) via a 25-pole Sub-D connector
- X420 Pulse encoder simulation via a 6-pole terminal strip.

Connect the shielded signal cables at the appropriate connection and place the shield on the shield plate.

X424 - Encoder connection

The following signal cables are provided for connecting an encoder to the SBM optional board:

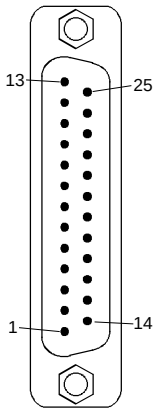

View of the connector (pins) of the board in mounting position

Pin	Designation	Significance
1	P encoder	Encoder supply 5 / 7.5 / 15 V, Imax = 390 mA
2	M encoder	Ground, encoder supply
3	A+	1 V_{SS} (0.8 V - 1.2 V)
4	A-	
5	Internal shield	
6	B+	1 V_{SS} (0.8 V - 1.2 V)
7	B-	
8	Internal shield	
13	+Temp	Motor temperature sensing PTC / KTY
14	Encoder sense	Sense input - encoder supply
16	0 V sense	Ground, sense input - encoder supply
17	R+	Zero track 0.5 V_{SS} (0.2 V - 0.8 V)
18	R-	
19	C+	1 sine / revolution 1 V_{SS} (0.8 V - 1.2 V)
20	C-	
21	D+	1 cosine / revolution 1 V_{SS} (0.8 V - 1.2 V)
22	D-	
24	Internal shield	
25	-Temp	Motor temperature sensing PTC / KTY
Housing	External shield	

Table 4-1 Pin assignment at connector X424 for encoder

X424 - Multiturn encoder

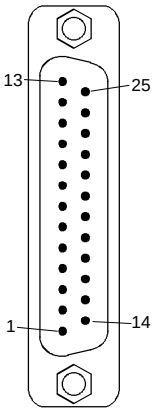

View of the connector (pins) of the board in mounting position

The following signal cables are provided for connecting a multiturn encoder to the SBM optional board:

Pin	Designation	Significance
1	P encoder	Encoder supply 5 / 7.5 / 15 V, Imax = 390 mA
2	M encoder	Ground, encoder supply
3	A+	1 V_{SS} (0.8 V - 1.2 V)
4	A-	
5	Internal shield	
6	B+	1 V_{SS} (0.8 V - 1.2 V)
7	B-	
8	Internal shield	
10	Cycle+	Baud rate 100 kHz - 2 MHz parameterizable RS422
12	Cycle-	
13	+Temp	Motor temperature sensing PTC / KTY
14	Encoder sense	Sense input encoder supply
15	Data+	RS485
16	0 V sense	Ground, sense input encoder supply
23	Data-	RS485
24	Internal shield	
25	-Temp	Motor temperature sensing PTC / KTY
Housing	External shield	

Table 4-2 Pin assignment at connection X424 for absolute-value/multiturn encoder

X420 - Pulse encoder simulation

At connection X420 you can pick up the signals of the pulse encoder simulation generated on the optional board.

A zero pulse which does not exist (if a multiturn encoder is connected) is simulated by the board.

The simulation signals are available as differential signals according to standard RS 422.

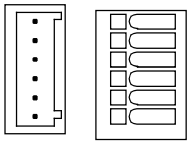

Terminal	Designation	Significance	Range
80	A+	Pulse encoder simulation track A+	RS 422
81	A-	Pulse encoder simulation track A-	standard
82	B+	Pulse encoder simulation track B+	RS 422
83	B-	Pulse encoder simulation track B-	standard
84	N+	Pulse encoder simulation track zero+	RS 422
85	N-	Pulse encoder simulation track zero-	standard

Connectable cross-section: 0.5 mm² (AWG 20)

Terminal 80 is at the top when installed.

Table 4-3 Terminal assignment at connection X420

5 Start-up

After installation of the SBM optional board has been completed, an automatic self-test is carried out when the basic unit (converter/inverter) is powered up.

NOTE Please refer to the documentation for the respective basic unit regarding instructions for parameterization using the quick procedure.

Bisher sind folgende Ausgaben erschienen:
The following editions have been published so far:

Ausgabe Edition	Interne Sachnummer Internal Item Number
AA	477 754 4070 76 J AA-74
AB	477 754 4070 76 J AB-74

Ausgabe AB besteht aus folgenden Kapiteln:
Version AB consists of the following chapters:

	Kapitel	Chapter	Seitenzahl Pages	Ausgabedatum Version date
0	Definitionen und Warnungen	Definitions and Warnings	4	09.98
1	Beschreibung	Description	3	09.98
2	Technische Daten	Technical Data	2	09.98
3	Montage	Installation	1	09.98
4	Anschließen	Connecting-up	4	09.98
5	Inbetriebsetzung	Start-up	1	09.98

Group: Automation and Drives (A&D)
Division: Variable-Speed Drive Systems
Postfach 3269, D-91050 Erlangen

Siemens Aktiengesellschaft

Subject to change

Printed in the Federal Republic of Germany
09.98

SIEMENS

SIMOVERT MASTERDRIVES

Betriebsanleitung
Operating Instructions

SBP - Impulsgeberbaugruppe

SBP - Sensor Board Pulse

Ausgabe / Edition: AD

6SE7087-6NX84-2FA0

Contents

0 Definitions and Warnings 0-1

1 Description 1-1

2 Technical Data 2-1

3 Installation 3-1

4 Connecting-up 4-1

5 Start-up 5-1

0 Definitions and Warnings

Qualified personnel

For the purpose of this documentation and the product warning labels, a "Qualified person" is someone who is familiar with the installation, mounting, start-up, operation and maintenance of the product. He or she must have the following qualifications:

- Trained or authorized to energize, de-energize, ground and tag circuits and equipment in accordance with established safety procedures.
- Trained or authorized in the proper care and use of protective equipment in accordance with established safety procedures.
- Trained in rendering first aid.



DANGER

For the purpose of this documentation and the product warning labels, "Danger" indicates death, severe personal injury or substantial property damage will result if proper precautions are not taken.



WARNING

For the purpose of this documentation and the product warning labels, "Warning" indicates death, severe personal injury or property damage can result if proper precautions are not taken.



CAUTION

For the purpose of this documentation and the product warning labels, "Caution" indicates that minor personal injury or material damage can result if proper precautions are not taken.

NOTE

For the purpose of this documentation, "Note" indicates important information about the product or about the respective part of the documentation which is essential to highlight.



WARNING

- Hazardous voltages are present in this electrical equipment during operation.
- Non-observance of the warnings can thus result in severe personal injury or property damage.
- Only qualified personnel should work on or around the equipment
- This personnel must be thoroughly familiar with all warning and maintenance procedures contained in this documentation.
- The successful and safe operation of this equipment is dependent on correct transport, proper storage and installation as well as careful operation and maintenance.



CAUTION

Components which can be destroyed by electrostatic discharge (ESD)

The board contains components which can be destroyed by electrostatic discharge. These components can be easily destroyed if not carefully handled. If you have to handle electronic boards, please observe the following:

- Electronic boards should only be touched when absolutely necessary.
- The human body must be electrically discharged before touching an electronic board.
- Boards must not come into contact with highly insulating materials - e.g. plastic parts, insulated desktops, articles of clothing manufactured from man-made fibers.
- Boards must only be placed on conductive surfaces.
- Boards and components should only be stored and transported in conductive packaging (e.g. metalized plastic boxes or metal containers).
- If the packing material is not conductive, the boards must be wrapped with a conductive packaging material, e.g. conductive foam rubber or household aluminium foil.

The necessary ESD protective measures are clearly shown in the following diagram:

- a = Conductive floor surface
- b = ESD table
- c = ESD shoes
- d = ESD overall
- e = ESD chain
- f = Cubicle ground connection

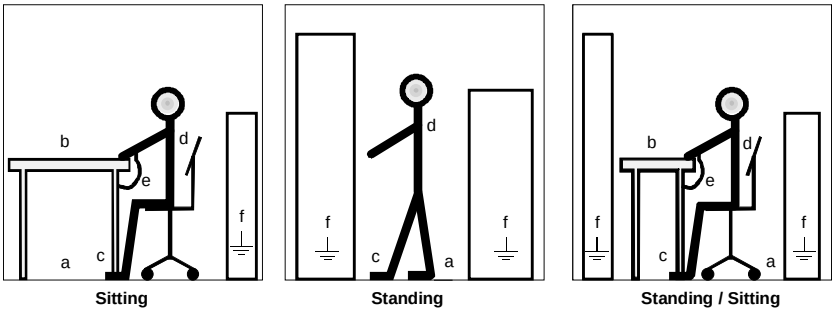

Fig. 0-1 ESD protective measures

1 Description

The SBP optional board (Sensor Board Pulse) enables a pulse encoder to be connected up to the converter and inverter modules.

Connectable pulse encoders

You can connect all conventional pulse encoders to the optional board.

The pulses can be processed as TLL or HTL level bipolar or unipolar pulses.

Evaluation of the encoder signals is possible up to a pulse frequency of 410 kHz (4096 pulses per revolution at 6000 rpm). Encoder monitoring by evaluation of the control track is also possible.

The supply voltage of the connected encoder can be set to 5 V or 15 V.

Temperature sensor

In addition to a pulse encoder, you can connect a temperature sensor (either a KTY, PT100 or a PTC sensor) to the optional board for monitoring the motor temperature.

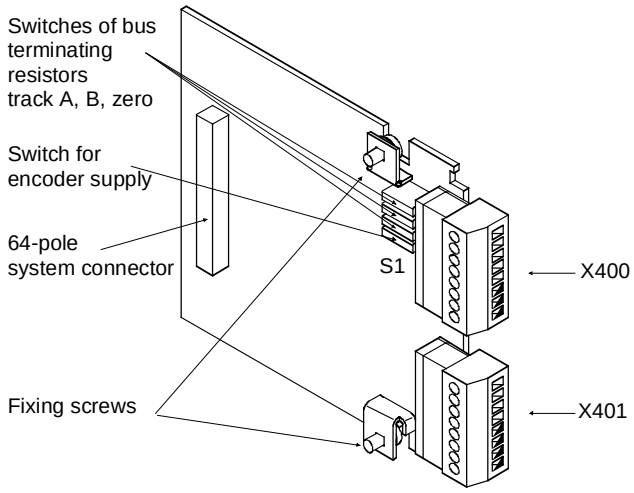

Fig. 1-1 View of the SBP optional board

Function principle

Pulse encoders supply a defined number of pulses per revolution. These pulses are counted in the evaluation electronics. The number of pulses arriving in a certain period provides a measure for the distance covered in this time segment.

Most pulse encoders are provided with pulse tracks A and B. These supply two pulse sequences offset by 90°. By evaluating all edge transitions, it is possible to duplicate the pulses and increase the resolution. The sense of rotation can be seen from the time sequence**.**

In addition to tracks A and B, most pulse encoders also have a zero track. This provides one pulse per revolution.

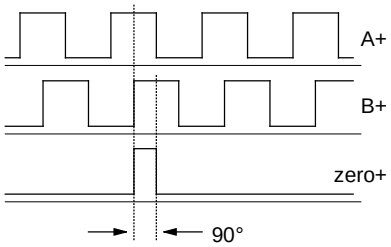

Fig. 1-2 Example of a pulse sequence

2 Technical Data

Order number	6SE7090-0XX84-0FA0
Size (length x width)	90 mm x 83 mm
Pollution degree	Pollution degree 2 acc. to IEC 664-1 (DIN VDE 0110/T1), moisture condensation is not permissible in operation
Mechanical strength During stationary operation - Deflection - Acceleration During transport - Deflection - Acceleration	Acc. to DIN IEC 68-2-6 (for correctly installed board) 0.15 mm in frequency range 10 Hz to 58 Hz 19.6 m/s² in frequency range > 58 Hz to 500 Hz 3.5 mm in frequency range 5 Hz to 9 Hz 9.8 m/s² in frequency range > 9 Hz to 500 Hz
Climate class	Class 3K3 to DIN IEC 721-3-3 (in operation)
Type of cooling	Natural-air cooling
Permissible ambient or coolant temperature - during operation - during storage - during transport	 0° C to +70° C (32° F to 158° F) -25° C to +70° C (-13° F to 158° F) -25° C to +70° C (-13° F to 158° F)
Permissible humidity rating	Relative air humidity ≤ 95 % during transport and storage ≤ 85 % in operation (condensation not permissible)

Table 2-1 Technical data

3 Installation

If the inverters/converters are ordered with optional functions, the optional boards are already installed in the units when they are delivered.

It is possible to retrofit optional boards and this can be carried out by the user.

For this purpose, there are either three or up to six slots on the basic unit depending on the type of construction for mounting the optional boards.

An exact description of installation is included with the relevant basic unit. As the unit has to be removed and opened in order to install optional boards, attention must be paid to the ESD measures. Please refer to the operating instructions of the basic unit in this regard.

NOTE

Generally, you can install the SBP optional board in every slot. However, if you want to evaluate the motor temperature with the board, you have to install it in slot C as the analog signals of the temperature sensor (KTY, PT100 or PTC) are only passed on in this slot.

4 Connecting-up

The optional board has two terminal strips for the signal cables.

Connect the signal cables at the corresponding connection; terminal X401/75 is provided for the shield.

NOTE

- The signal inputs of tracks A, B and zero of connector X401 are provided internally with bus terminating resistors. These are powered up in the factory setting (switches S1-1 to S1-3 closed).
- The switches of the bus terminating resistors are located on the optional board behind connector X400. Of the four switches, the upper three in the correct installation position are responsible for the bus terminating resistors (in the sequence A, B, zero, counting from the top).
- The bus terminating resistors should normally be powered up. If several boards are controlled with pulses from one source, all the bus terminating resistors have to be powered down except for the last one in the row.
- The power supply for the encoders can be switched OFF with switch S1-4. The encoders must then be connected to an external supply. As set at the factory, the encoder supply is active (S1-4 open).
- The power supply to the encoders (5 V or 15 V) is adjusted by means of parameter P150 (see Compendium, Function diagrams, Pulse encoder evaluation).

Connection X400

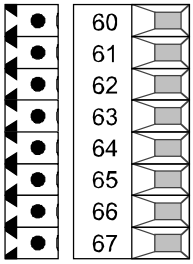

Terminal	Designation	Significance	Range
60	+ V_{SS}	Power supply for pulse encoder	5 / 15 V I_{max} = 250 mA
61	- V_{SS}	Ground for power supply	
62	- Temp	Minus (-) connection KTY84/PTC100	
63	+ Temp	Plus (+) connection KTY84/PTC100	3 mA accuracy ±1 %
64	Ground rough/fine	Ground	
65	Rough pulse 1	Digital input rough pulse 1	
66	Rough pulse 2	Digital input rough pulse 2	
67	Fine pulse 2	Digital input fine pulse 2	

Connectable cross-section: 2.5 mm² (AWG 12)

Terminal 60 is at the top when installed.

Table 4-1 Connection X400

Connection X401

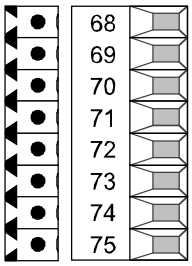

Terminal	Designation	Significance	Range
68	Track A+	Plus(+) connection track A	TTL/HTL/HTL unipolar
69	Track A-	Minus(-) connection track A	TTL/HTL/HTL unipolar
70	Track B+	Plus(+) connection track B	TTL/HTL/HTL unipolar
71	Track B-	Minus(-) connection track B	TTL/HTL/HTL unipolar
72	Zero pulse+	Plus(+) connection zero track	TTL/HTL/HTL unipolar
73	zero pulse-	Minus(-) connection zero track	TTL/HTL/HTL unipolar
74	CTRL+	Plus(+) connection control track	TTL/HTL/HTL unipolar
75	CTRL- = M	Minus (-) connection control track = ground	TTL/HTL/HTL unipolar

Connectable cross-section: 2.5 mm² (AWG 12)

Terminal 68 is at the top when installed.

Table 4-2 Connection X401

Voltage range of the encoder inputs

	RS422 (TTL)	HTL bipolar	HTL unipolar
Voltage range - Input		max. 33 V min. -33V	
Voltage range + Input		max. 33 V min. -33V	
Switching level Differential voltage - LOW	Min -150 mV	Min -2 V	Min 4 V
Switching level Differential voltage - HIGH	Max 150 mV	Max 2 V	Max 8 V

Table 4-3 Voltage range of the encoder inputs

NOTE

For the connection of unipolar signals, a ground connection at the CTRL- terminal is adequate for all signals. In view of the possibility of interference radiation, it is recommended in the case of cables with lengths of more than 100 m to bypass the four terminals A–, B–, zero pulse– and CTRL– and to connect to the encoder ground.

Voltage range of the digital inputs

	Rated value	Min.	Max.
Voltage range LOW	0 V	-0.6 V	3 V
Voltage range HIGH	13 V	24 V	33 V

Table 4-4 Voltage range of digital inputs

Input current at a rated value of 24 V for HIGH level:

	Min.	Rated value	Max.
Input current HIGH	8 mA	10 mA	12 mA

Table 4-5 Input current for HIGH level

Input current at a rated value of 24 V for LOW level:

	Min.	Rated value	Max.
Input current LOW		≤ 2 mA	

Table 4-6 Input current for LOW level

NOTE

The inputs are non-floating. The rough pulse is smoothed with 0.7 ms, and the fine pulse with approx. 200 ns.

Example of connecting encoder signals with HTL level unipolar

The encoder is provided with signals of track A+, B+ and an additional zero pulse.

In order to avoid any interference radiation on the signals, you should bypass terminals A-, B-, zero- and CTRL- and connect to the encoder ground.

The screen of the encoder line must be connected to ground over a wide area, both on the motor side and on the converter side.

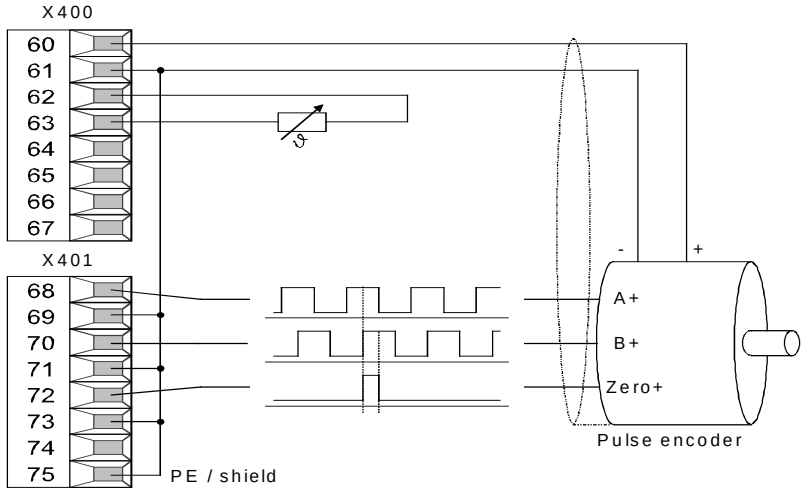

Fig. 4-1 Connection of a pulse encoder with HTL level

Example of connecting encoder signals with TTL level, bipolar (RS422)

The encoder is provided with signals of track A+, A-, B+, B- zero+, zero- and an additional control signal for monitoring the encoder cable.

The additional transmission of the inverted signals results in increased interference immunity, which means that longer signal cables can be used than for unipolar signal transmission.

The screen of the encoder line must be connected to earth ground a wide area, both on the motor side and on the converter side.

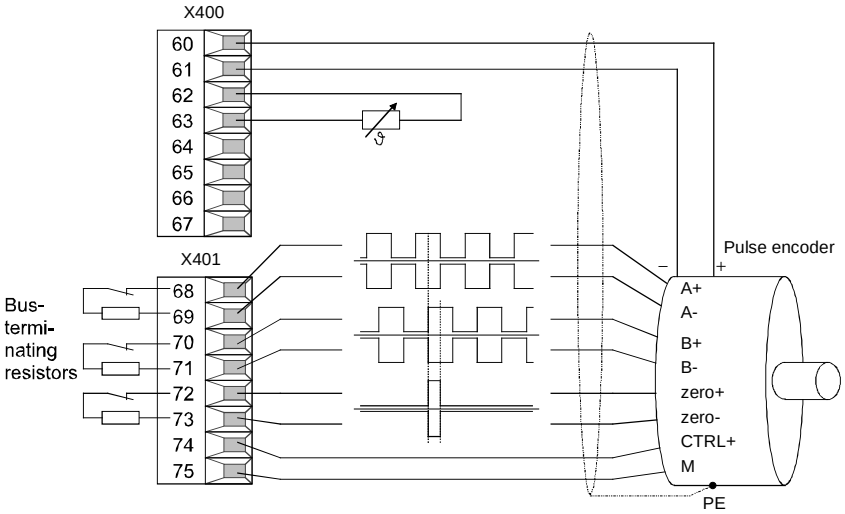

Fig. 4-2 Connecting a pulse encoder with TTL level, bipolar (RS422)

5 Start-up

After installation of the SBP optional board has been completed, an automatic self-test is carried out when the basic unit (converter/inverter) is powered up.

NOTE Please refer to the documentation for the respective basic unit regarding instructions for parameterization using the quick procedure.

Bisher sind folgende Ausgaben erschienen:
The following editions have been published so far:

Ausgabe Edition	Interne Sachnummer Internal Item Number
AA	477 750 4070 76 J AA-74
AB	477 750 4070 76 J AB-74
AC	477 750 4070 76 J AC-74
AD	477 750 4070 76 J AD-74

Ausgabe AD besteht aus folgenden Kapiteln:
Version AD consists of the following chapters:

	Kapitel	Chapter	Seitenzahl Pages	Ausgabedatum Version date
0	Definitionen und Warnungen	Definitions and Warnings	4	10.99
1	Beschreibung	Description	3	10.99
2	Technische Daten	Technical Data	1	10.99
3	Montage	Installation	1	10.99
4	Anschließen	Connecting-up	7	10.99
5	Inbetriebsetzung	Start-up	1	10.99

Group: Automation and Drives (A&D)
Division: Variable-Speed Drive Systems
Postfach 3269, D-91050 Erlangen

Siemens Aktiengesellschaft

Subject to change

Printed in the Federal Republic of Germany
10.99

SIEMENS

SIMOVERT MASTERDRIVES

Betriebsanleitung
Operating Instructions

SBR - Resolverbaugruppe

SBR - Sensor Board Resolver

Ausgabe / Edition: AC

477 752 4070 76 J AC-74

Contents

0 Definitions and Warnings 0-1

1 Description 1-1

2 Technical Data 2-1

3 Installation 3-1

4 Connecting-up 4-1

5 Start-up 5-1

0 Definitions and Warnings

Qualified personnel

For the purpose of this documentation and the product warning labels, a "Qualified person" is someone who is familiar with the installation, mounting, start-up, operation and maintenance of the product. He or she must have the following qualifications:

- Trained or authorized to energize, de-energize, ground and tag circuits and equipment in accordance with established safety procedures.
- Trained or authorized in the proper care and use of protective equipment in accordance with established safety procedures.
- Trained in rendering first aid.



DANGER

For the purpose of this documentation and the product warning labels, "Danger" indicates death, severe personal injury or substantial property damage will result if proper precautions are not taken.



WARNING

For the purpose of this documentation and the product warning labels, "Warning" indicates death, severe personal injury or property damage can result if proper precautions are not taken.



CAUTION

For the purpose of this documentation and the product warning labels, "Caution" indicates that minor personal injury or material damage can result if proper precautions are not taken.

NOTE

For the purpose of this documentation, "Note" indicates important information about the product or about the respective part of the documentation which is essential to highlight.



WARNING

- Hazardous voltages are present in this electrical equipment during operation.
- Non-observance of the warnings can thus result in severe personal injury or property damage.
- Only qualified personnel should work on or around the equipment
- This personnel must be thoroughly familiar with all warning and maintenance procedures contained in this documentation.
- The successful and safe operation of this equipment is dependent on correct transport, proper storage and installation as well as careful operation and maintenance.



CAUTION

Components which can be destroyed by electrostatic discharge (ESD)

The board contains components which can be destroyed by electrostatic discharge. These components can be easily destroyed if not carefully handled. If you have to handle electronic boards, please observe the following:

- Electronic boards should only be touched when absolutely necessary.
- The human body must be electrically discharged before touching an electronic board.
- Boards must not come into contact with highly insulating materials - e.g. plastic parts, insulated desktops, articles of clothing manufactured from man-made fibers.
- Boards must only be placed on conductive surfaces.
- Boards and components should only be stored and transported in conductive packaging (e.g. metalized plastic boxes or metal containers).
- If the packing material is not conductive, the boards must be wrapped with a conductive packaging material, e.g. conductive foam rubber or household aluminium foil.

The necessary ESD protective measures are clearly shown in the following diagram:

- a = Conductive floor surface
- b = ESD table
- c = ESD shoes
- d = ESD overall
- e = ESD chain
- f = Cubicle ground connection

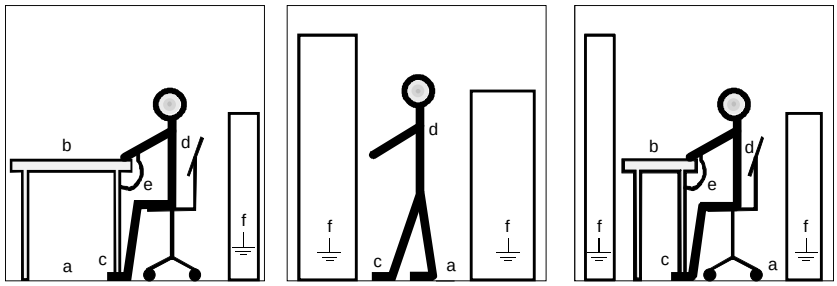

Fig. 0-1 ESD protective measures

1 Description

The SBR optional board (Sensor Board Resolver) enables a resolver to be connected to the converter and inverter modules.

NOTE

The SBR optional board is available in two versions:

- SBR1 Optional board for connecting up a resolver
- SBR2 Optional board for connecting up a resolver with additional pulse encoder simulation

Connectable resolvers

You can connect all standard 2-pole resolvers and resolvers with the pole pair number of the motor to the optional board. Adaptation to the different types of resolvers is effected on the optional board by automatic adjustment of the signal amplitude and the sampling time.

Temperature sensor

As well as a resolver, you can connect a temperature sensor (either a KTY or a PTC sensor) to the optional board for monitoring the motor temperature.

Pulse encoder simulation

As an option, the SBR2 optional board can be equipped with pulse encoder simulation. This provides A+, A-, B+, B-, zero+ and zero- signals according to the standard RS422 which can be picked up via an additional front socket.

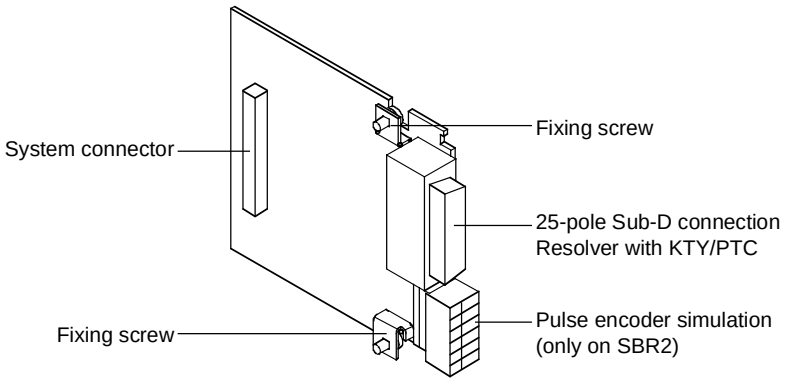

Fig. 1-1 View of the SBR2

Function principle

The position of an exciter coil in the rotor in relation to two stator coils is evaluated in the resolver.

A high-frequency carrier signal (5 to 10 kHz) is injected into the rotor winding of the resolver via a rotary transformer. The high-frequency current flowing in the rotor induces a high-frequency voltage into the two stator coils arranged at right-angles to each other. The amplitude of this voltage depends on the present position of the rotor winding or of the rotor. The envelope curve of the voltage induced into the stator coils is a sine or cosine curve.

On account of the right-angle arrangement of the stator coils, one coil will supply the sine value, and the other coil the cosine value of the present rotor position. Both signals are sensed via A/D transformers.

Subsequently, the unit software calculates the position angle α from these two signals via trigonometry functions.

The change of the position angle α between two sampling times provides the current speed of the motor.

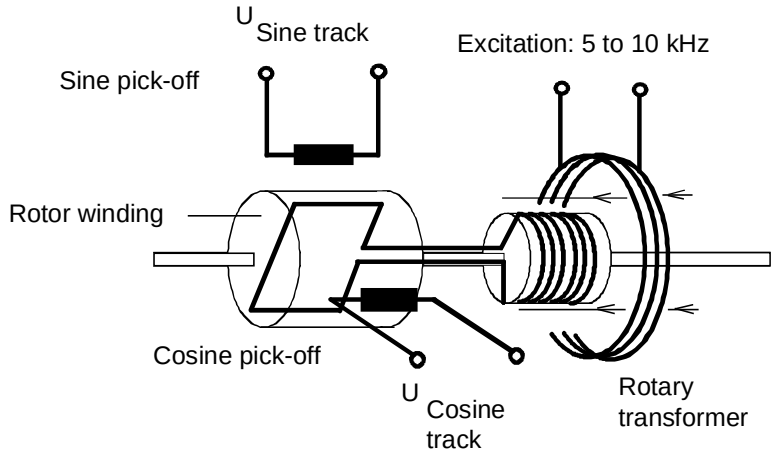

Fig. 1-2 Schematic diagram of a resolver

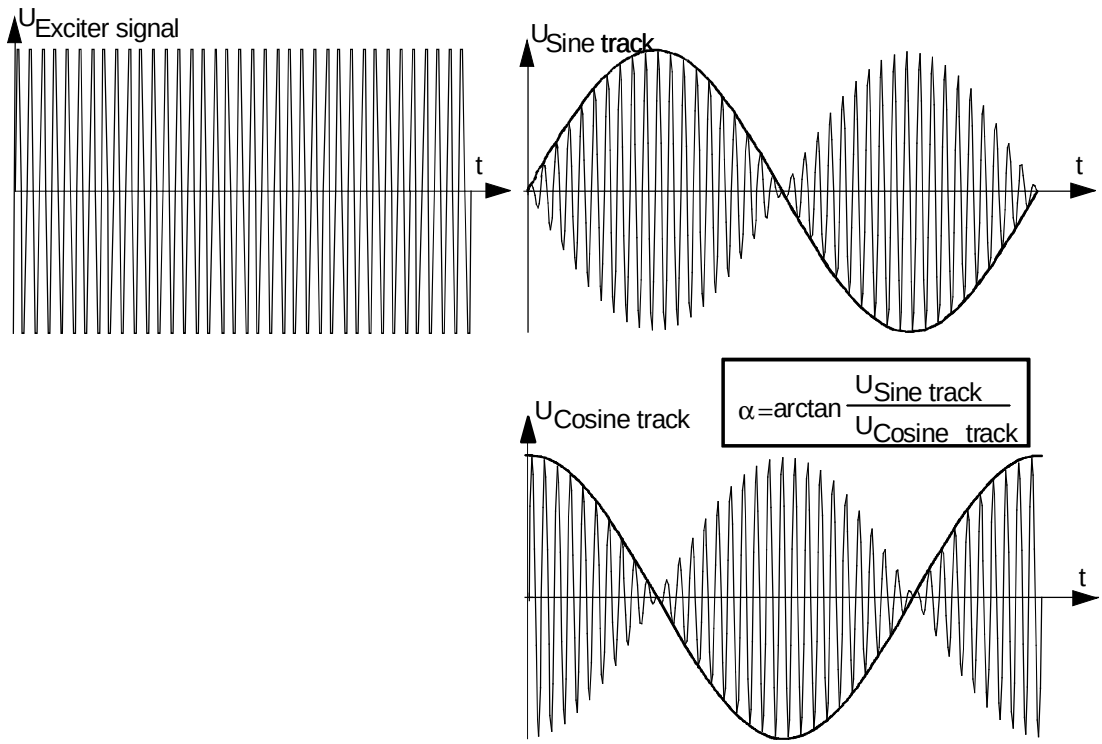

Fig. 1-3 Resolver output signals

Adjustment

Via a PLL control loop, the SBR optional board is capable of setting the phase position of the exciter signal such that the sine or cosine signal induced in the stator windings of the resolver is always sensed at maximum.

At the same time, the amplitude of the exciter signal is adjusted to the maximum resolution of the internal A/D transformer. This enables the position angle of the stator winding to be sensed with the maximum possible accuracy.

2 Technical Data

Order numbers	6SE7090-0XX84-0FB0 (SBR1) Resolver evaluation without pulse encoder simulation 6SE7090-0XX84-0FC0 (SBR2) Resolver evaluation with pulse encoder simulation
Size (length x width)	90 mm x 83 mm
Pollution degree	Pollution degree 2 acc. to IEC 664-1 (DIN VDE 0110/T1), moisture condensation is not permissible in operation
Mechanical strength During stationary operation - Deflection - Acceleration During transport - Deflection - Acceleration	Acc. to DIN IEC 68-2-6 (for correctly installed board) 0.15 mm in frequency range 10 Hz to 58 Hz 19.6 m/s² in frequency range > 58 Hz to 500 Hz 3.5 mm in frequency range 5 Hz to 9 Hz 9.8 m/s² in frequency range > 9 Hz to 500 Hz
Climate class	Class 3K3 to DIN IEC 721-3-3 (in operation)
Type of cooling	Natural-air cooling

Permissible ambient or coolant temperature - during operation - during storage - during transport	 0° C to +70° C (32° F to 158° F) -25° C to +70° C (-13° F to 158° F) -25° C to +70° C (-13° F to 158° F)
Permissible humidity rating	Relative air humidity ≤ 95 % during transport and storage ≤ 85 % in operation (condensation not permissible)

Table 2-1 Technical Data

3 Installation

If the inverters/converters are ordered with optional functions, the optional boards are already installed in the units when they are delivered.

It is possible to retrofit optional boards and this can be carried out by the user.

For this purpose, there are either three or up to six slots on the basic unit depending on the unit type of construction for mounting the optional boards.

An exact description of installation is included with the relevant basic unit. As the unit has to be removed and opened in order to install optional boards, attention must be paid to the ESD measures. Please refer to the operating instructions of the basic unit in this regard.

NOTE Install the SBRx optional board in slot C. The SBRx optional board does not operate in other slots.

4 Connecting-up

Connecting-up

The optional board is provided with the following connections for the signal cables:

- X414 Encoder connection via a 25-pole SUB D connector
- X410 Pulse encoder simulation via a 6-pole terminal strip (only for SBR2)

Connect the shielded signal cables to the appropriate connection and place the shield on the shield plate.

Encoder connection

Connect the resolver to the optional board by means of the shielded encoder cable. Use the pre-assembled cable for this purpose.

Connection is via a 25-pole SUB D connector on the front side of the optional board.

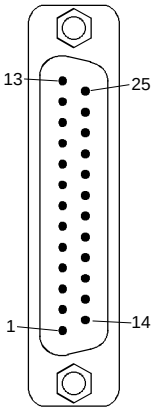

Pin	Significance	Range
3	Resolver output voltage sin+	
4	Resolver output voltage sin-	
5	Internal shield for 3 and 4	
6	Resolver output voltage cos+	
7	Resolver output voltage cos-	
8	Internal shield for 6 and 7	
9	Resolver excitation +	adjustable 0-7 V_{SS},
11	Ground for resolver excitation	5 to 10 kHz sine
13	Motor temperature sensing PTC/KTY	
24	Internal shield for 13 and 25	
25	Motor temperature sensing PTC/KTY	
Housing	External shield	

Table 4-1 Pin assignment at connection X414

Pulse encoder simulation (only for SBR2)

At connection X410 you can pick up the signals of the pulse encoder simulation generated on the optional board.

The optional board generates 512 or 1024 pulses alternatively per electrical revolution. In the case of a two-pole resolver the set pulses (512 or 1024) are generated accordingly, in the case of a four-pole resolver twice the number of pulses are generated, and in the case of a six-pole resolver, three times the number of pulses are generated per mechanical resolver revolution.

The simulation signals are available as differential signals according to standard RS 422.

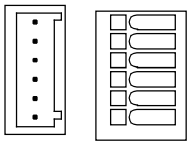

Terminal	Designation	Significance	Range
90	A+	Pulse encoder simulation track A+	RS 422
91	A-	Pulse encoder simulation track A-	standard
92	B+	Pulse encoder simulation track B+	RS 422
93	B-	Pulse encoder simulation track B-	standard
94	N+	Pulse encoder simulation track zero+	RS 422
95	N-	Pulse encoder simulation track zero-	standard

Connectable cross-section: 0.5 mm² (AWG 20)

Terminal 90 is at the top when installed.

Table 4-2 Terminal assignment at connection X410

5 Start-up

After installation of the SBR optional board has been completed, an automatic self-test is carried out when the basic unit (converter/inverter) is powered up.

NOTE Please refer to the documentation for the respective basic unit regarding instructions for parameterization using the quick procedure.

Bisher sind folgende Ausgaben erschienen:
The following editions have been published so far:

Ausgabe Edition	Interne Sachnummer Internal Item Number
AA	477 752 4070 76 J AA-74
AB	477 752 4070 76 J AB-74
AC	477 752 4070 76 J AC-74

Ausgabe AC besteht aus folgenden Kapiteln:
Version AC consists of the following chapters:

	Kapitel	Chapter	Seitenzahl Pages	Ausgabedatum Version date
0	Definitionen und Warnungen	Definitions and Warnings	4	09.98
1	Beschreibung	Description	6	09.98
2	Technische Daten	Technical Data	2	09.98
3	Montage	Installation	1	09.98
4	Anschließen	Connecting-up	3	09.98
5	Inbetriebsetzung	Start-up	1	09.98

Group: Automation and Drives (A&D)
Division: Variable-Speed Drive Systems
Postfach 3269, D-91050 Erlangen

Siemens Aktiengesellschaft

Subject to change

Printed in the Federal Republic of Germany
09.98

SIEMENS

SIMOVERT MASTERDRIVES

Betriebsanleitung
Operating Instructions

SCB1 – Serielle Kommunikationsbaugruppe 1
SCB1 – Serial Communication Board 1

Ausgabe / Edition AA

Bestell-Nr. / Order No.: 6SE7087-6CX84-0BC0

Contents

1 DEFINITIONS AND WARNINGS 1-1

2 PRODUCT DESCRIPTION 2-1

2.1 Serial I/O system 2-1

2.2 Peer-to-peer connection 2-1

3 INSTALLATION 3-1

3.1 Installation of the SCB1 3-1

3.2 Installing the SCI boards 3-3

3.3 Dimension drawings of the SCI boards 3-3

4 CONNECTION AND START-UP 4-1

4.1 Serial I/O system 4-2
4.1.1 Connection 4-2
4.1.2 Start-up 4-10
4.1.3 Behavior of the digital inputs 4-13

4.2 Peer-to-peer 4-14
4.2.1 Connecting-up 4-14
4.2.2 Start-up 4-15

4.3 Significant visualization parameters 4-19

5 LOCATING FAULTS 5-1

6 TECHNICAL DATA 6-1

1 Definitions and Warnings

Qualified personnel

For the purpose of this documentation and the product warning labels, a "Qualified person" is someone who is familiar with the installation, mounting, start-up, operation and maintenance of the product. He or she must have the following qualifications:

- Trained or authorized to energize, de-energize, ground and tag circuits and equipment in accordance with established safety procedures.
- Trained or authorized in the proper care and use of protective equipment in accordance with established safety procedures.
- Trained in rendering first aid.

DANGER



For the purpose of this documentation and the product warning labels, "Danger" indicates death, severe personal injury or substantial property damage will result if proper precautions are not taken.

WARNING



For the purpose of this documentation and the product warning labels, "Warning" indicates death, severe personal injury or property damage can result if proper precautions are not taken.

CAUTION



For the purpose of this documentation and the product warning labels, "Caution" indicates that minor personal injury or material damage can result if proper precautions are not taken.

NOTE

For the purpose of this documentation, "Note" indicates important information about the product or about the respective part of the documentation which is essential to highlight.

WARNING



Hazardous voltages are present in this electrical equipment during operation.

Non-observance of the warnings can thus result in severe personal injury or property damage.

Only qualified personnel should work on or around the equipment

This personnel must be thoroughly familiar with all warning and maintenance procedures contained in this documentation.

The successful and safe operation of this equipment is dependent on correct transport, proper storage and installation as well as careful operation and maintenance.

NOTE

This documentation does not purport to cover all details on all types of the product, nor to provide for every possible contingency to be met in connection with installation, operation or maintenance.

Should further information be desired or should particular problems arise which are not covered sufficiently for the purchaser's purposes, the matter should be referred to the local SIEMENS sales office.

The contents of this documentation shall not become part of or modify any prior or existing agreement, commitment or relationship. The sales contract contains the entire obligation of SIEMENS AG. The warranty contained in the contract between the parties is the sole warranty of SIEMENS AG. Any statements contained herein do not create new warranties or modify the existing warranty.

CAUTION



Components which can be destroyed by electrostatic discharge (ESD)

The board contains components which can be destroyed by electrostatic discharge. These components can be easily destroyed if not carefully handled. If you have to handle electronic boards, please observe the following:

Electronic boards should only be touched when absolutely necessary.

The human body must be electrically discharged before touching an electronic board.

Boards must not come into contact with highly insulating materials - e.g. plastic parts, insulated desktops, articles of clothing manufactured from man-made fibers.

Boards must only be placed on conductive surfaces.

Boards and components should only be stored and transported in conductive packaging (e.g. metalized plastic boxes or metal containers).

If the packing material is not conductive, the boards must be wrapped with a conductive packaging material, e.g. conductive foam rubber or household aluminium foil.

The necessary ESD protective measures are clearly shown again in the following diagram:

- a = Conductive floor surface
- b = ESD table
- c = ESD shoes
- d = ESD overall
- e = ESD chain
- f = Cubicle ground connection

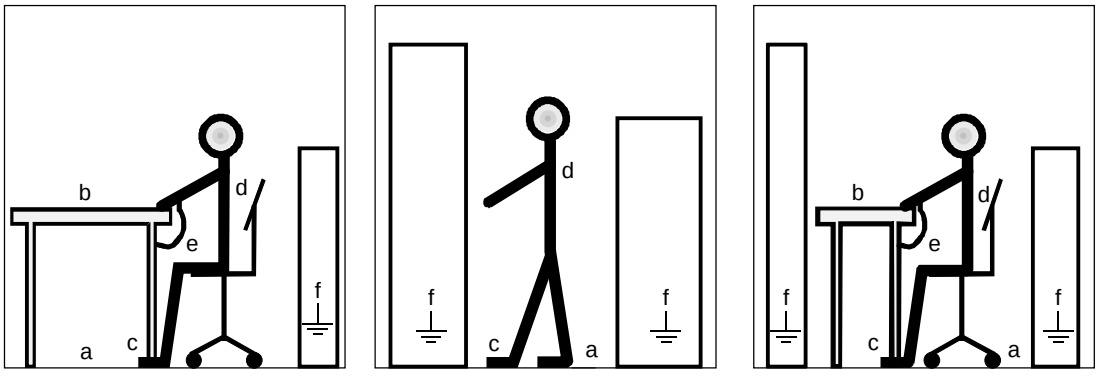

Fig. 1-1 ESD protective measures

2 Product Description

The SCB1 (Serial Communication Board 1) supplements converters of the SIMOVERT MASTERDRIVES series by providing

- the terminal-strip expansion "serial I/O system“ (analog and digital), with the SCI1 or SCI2 boards, or with
- a peer-to-peer connection for fast transfer e.g. of setpoints between various converters.

Information is transferred, floating, via fiber-optic cables.

In order to connect the SCB with the CU control board, the local bus adapter (LBA) (MRPD 6SE7090-0XX84-4HA0) in the electronics box is used.

2.1 Serial I/O system

The SCB is used as a master, and can be connected with up to 2 SCI boards, operating as slaves, via fiber-optic cable.

2.2 Peer-to-peer connection

Several converters are connected in a multi-motor drive to create a fast setpoint cascade, for example, or are connected serially via the SCB board for common switch-on.

3 Installation

3.1 Installation of the SCB1

CAUTION



The boards contain components which can be damaged by electrostatic discharge; these boards can be destroyed if incorrectly handled.

Please comply with the guidelines in the operating instructions for the basic unit.

In order to install optional boards in the electronics box, the LBA (local Bus Adapter) must first have been mounted.

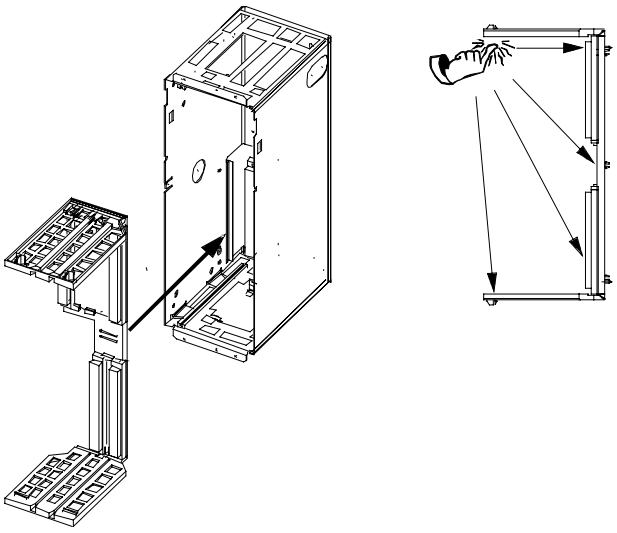

Fig. 3-1 Installation of the Local Bus Adapter

Installing the LBA bus expansion

- Take out the CU (left-hand-side slot in the electronics box) using the handles after first removing the connecting cable to the PMU and both retaining screws
- Insert the LBA bus expansion in the electronics box (for position, refer to diagram) so that it snaps into place
- Re-insert the CU into the left-hand slot, screw the retaining screws on the handles tight, and plug in the connecting cable to the PMU
- Insert the optional board in slot 2 (right) or slot 3 (center) of the electronics box and screw into place. Only one of each type of optional board may be inserted in the electronics box. If only one optional board is inserted, then it must always be at slot 2 (right).

Examples of possible arrangements

Slot 1	Slot 3	Slot 2
CU	---	SCB
CU	SCB	Tx00
CU	CBx	SCB
CU	TSY	SCB

NOTE

If used as a serial USS interface:
At the last bus node (last slave board on the bus), the bus terminating resistors must be connected by closing the S1 switch.

NOTE

Please note the differences in basic parameterization (described below) in comparison to those units with the older function classes, FC (CU1), VC (CU2) and SC (CU3).

To facilitate distinction, these parameter numbers and other deviations are printed on a dark-grey background.

3.2 Installing the SCI boards

Snap the SCI onto the DIN mounting rail.

Install 24 V -17 % / +25 %, 1 A power supply per SCI board (e.g. 6SX7010-0AC15) with the smallest possible clearance to the SCI.

NOTE

The SCI boards provide no protection against direct contact. Protection against contact must be ensured, for example, by mounting them in a housing or a control cabinet.

3.3 Dimension drawings of the SCI boards

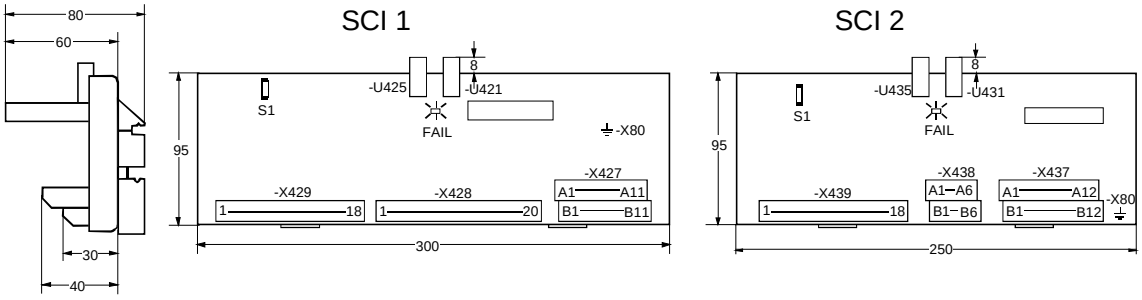

Fig. 3-2 SCI 1, SCI 2

4 Connection and Start-up

WARNING



SIMOVERT MASTERDRIVES converters are operated at high voltages.

Only qualified personnel may work on the units.

Non-compliance with these warning guidelines can result in death, severe bodily injury or considerable material damage.

Due to the DC-link capacitors, the converter still contains hazardous voltage levels up to 5 minutes after the power has been disconnected. The unit must not be opened, therefore, until after an appropriate waiting period.

The power and control terminals can still contain hazardous potential, even if the motor is stationary.

When working on an opened unit, it should be borne in mind that live components are exposed.

The user is responsible for ensuring that the motor, converter and any other equipment is installed, mounted and connected-up according to the rules recognized in the country where they are installed (in Germany: VDE, VBG4) and according to other regionally valid regulations. Special attention should be paid to cable dimensioning, fusing, grounding, disconnection, isolation and overcurrent protection.

4.1 Serial I/O system

4.1.1 Connection

NOTES

Use a sharp knife to cut the fiber-optic cables at right angles to the cable.
Ensure that the ends of the fiber-optic cable are not dirtied.

When the fiber-optic cable is being laid, a minimum bending radius of 3 cm must be complied with.

Permissible fiber-optic cable length: 0.3 m to 10 m

Spare-part MRPD for fiber-optic cables, 6SY7000-0AC43 (supplied by the meter)
Type of fiber-optic cable:
CUPO-Flex plastic fiber-optic cable CA-1V2Y1P980/1000 200A

Connection of the fiber-optic cable:

1. Loosen knurled nut
2. Plug in fiber-optic cable **up to the stop**.
3. Tighten knurled nut again until the fiber-optic cable can no longer be pulled out.

Ground the SCI at X80 through a short cable.

Route the input and output cables separately from power cables (e.g. between the converter and motor).

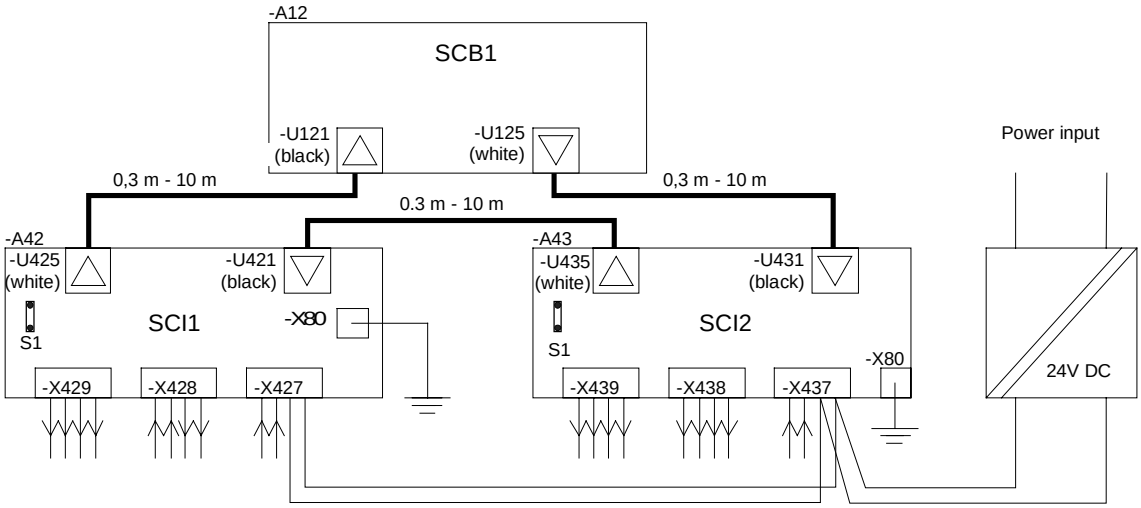

Fig. 4-1 Connecting example: SCB1 with SCI1 and SCI2 via fiber-optic cable

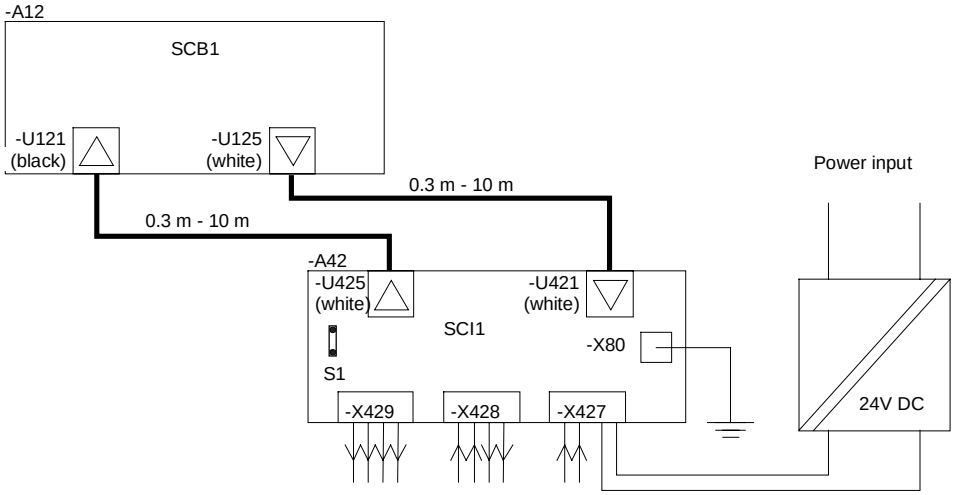

Fig. 4-2 Connecting example: SCB1 with SC!1 via fiber-optic cable

Function	Connection, SCB1	Connection, SCI1	Connection, SCI2
Receiver	U121	U421	U431
Transmitter	U125	U425	U435
Ground, screening (⏚)	—	X80	X80

Table 4-1 Fiber-optic cable connections and grounding on the SCB1, SCI1 and SCI2

Example	X427	Internal circuit	Function, information	BINECTOR		BINECTOR inverted	Note
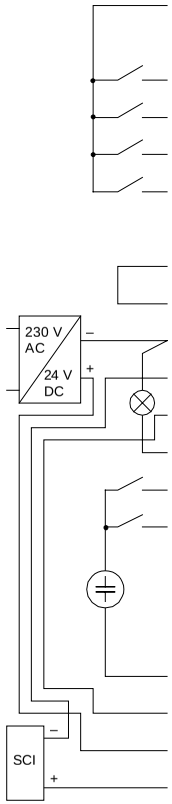	A1	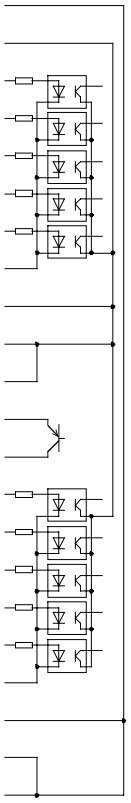	Auxiliary voltage P24 V DC, 200 mA for digital inputs				
	A2		Auxiliary voltage M for digital inputs				
	A3		Digital input 6	4x05	4x06	4x25	for slave 1: x = 1
	A4		Digital input 7	4x06	4x07	4x26	for slave 2: x = 2
	A5		Digital input 8	4x07	4x08	4x27	
	A6		Digital input 9	4x08	4x09	4x28	
	A7		Digital input 10	4x09	4x10	4x29	
	A8		Reference point or digital inputs 6 to 10				
	A9		Auxiliary voltage M for digital inputs				
	A10		Power supply M (external power-supply connection)				
	A11		Power supply M (external power-supply connection)				
	B1		Digital output 8, driver P24 V DC	P698.8			Connect B1 to P24 V DC (B9, see example), or to an external P24 V DC power supply referred to M (A11)
	B2		Digital output 8, 100 mA driver, external, short-circuit proof	P698.20 *)			
	B3		Digital input 1 [1])	4x00	4x01	4x20	
	B4		Digital input 2	4x01	4x02	4x21	
	B5		Digital input 3	4x02	4x03	4x22	
	B6		Digital input 4	4x03	4x04	4x23	
	B7		Digital input 5	4x04	4x05	4x24	*) Input of the relevant quantities in P698: for slave 1: Index 8 for slave 2: Index 20
	B8		Reference point for digital inputs 1 to 5				
	B9		Auxiliary voltage P24 V DC for digital inputs				
	B10		Power supply P24 V DC (external power-supply connection)				
	B11		Power supply P24 V DC (external power-supply connection)				

Table 4-2 For terminal strip X427 on SCI1, see function diagram Z10 or Z11

[1]) In order to avoid accidental switch-on when the voltage is restored after a voltage failure, digital input 1 should be used for the ON command. See Chapter 4.1.3, "Behavior of the digital inputs"

Example	X428	Internal circuit	Function, information	CONNECTOR or parameter	Note
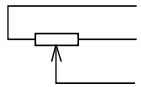	1	–	+ 10 V / 5 mA for potentiometer; short-circuit proof		
	2	–	- 10 V / 5 mA for potentiometer; short-circuit proof		
	3	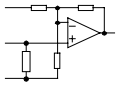	Analog input 1: Voltage (0 to +/- 10 V)	4x01	for slave 1: x = 1
	4		Ground		for slave 2: x = 2
	5		Current (0/4 to 20 mA, load impedance 250 Ω)		
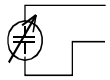	6	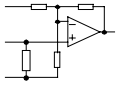	Analog input 2: Voltage (0 to +/- 10 V)	4x02	The same input or output must not be used simultaneously as a current or voltage input or output.
	7		Ground		
	8		Current (0/4 to 20 mA, load impedance 250 Ω)		
	9	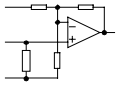	Analog input 3: Voltage (0 to +/- 10 V)	4x03	
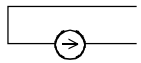	10		Ground		
	11		Current (0/4 to 20 mA, load impedance 250 Ω)		
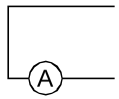	12	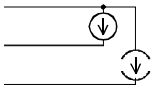	Analog output 1: Ground	P693 / P664	*) Input of the relevant quantities in P693 / P664; for slave 1 indices 1, 2, and 3; for slave 2 indices 4, 5 and 6
	13		Voltage (0 to +/- 10 V, max. 5 mA)	.1	
	14		Current (0 to 20 mA, max. 500 Ω)	.4*)	
	15	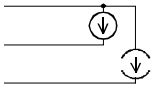	Analog output 2: Ground	P693 / P664	
	16		Voltage (0 to +/- 10 V, max. 5 mA)	.2	
	17		(0 to 20 mA, max. 500 Ω)	.5*)	The analog outputs are short-circuit proof.
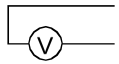	18	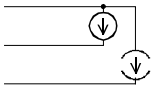	Analog output 3: Ground	P693 / P664	
	19		Voltage (0 to +/- 10 V, max. 5 mA)	.3	
	20		Current (0 to 20 mA, max. 500 Ω)	.6*)	

Table 4-3 For terminal strip X428 on SCI1.
see function diagram Z25 or Z26 (for AO)
Z20 or Z21 (for AI)

Note
In relation to the voltage inputs, the voltage outputs are inverted. If a positive value is to be mapped onto a positive current, a negative amplification (P694/P665) must be selected. This cancels the inversion.

Example	X429	Internal circuit	Function, information		Parameter	Note
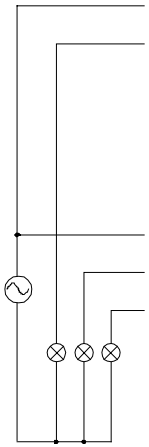					P698	
	1	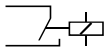	Digital output 1:	NO contact 100 V DC / 250 V AC;	.1	
	2			240 W / 2000 VA; min.: 24 V, 10 mA	.13 *)	
	3	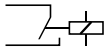	Digital output 2:	NO contact 100 V DC / 250 V AC;	.2	
	4			240 W / 2000 VA; min.: 24 V, 10 mA	.14 *)	
	5	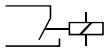	Digital output 3:	NO contact 100 V DC / 250 V AC;	.3	
	6			240 W / 2000 VA; min.: 24 V, 10 mA	.15 *)	The relays of the digital outputs are not designed for protective isolation when operated at 230 V.
	7		Digital output 4:	Changeover contact		
	8			100 V DC / 250 V AC; 240 W /	.4	
	9			2000 VA; minimum load: 24 V, 10 mA	.16 *)	
	10	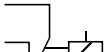	Digital output 5:	Changeover contact		
	11			100 V DC / 250 V AC; 240 W /	.5	*) Input of the relevant quantities in P698; for slave 1 indices 1, 2, 3, 4, 5, 6, 7; for slave 2 indices 13, 14, 15, 16, 17, 18, 19
	12			2000 VA; minimum load: 24 V, 10 mA	.17 *)	
	13	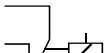	Digital output 6:	Changeover contact		
	14			100 V DC / 250 V AC; 240 W /	.6	
	15			2000 VA; minimum load: 24 V, 10 mA	.18 *)	
	16	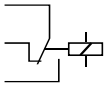	Digital output 7:	Changeover contact		
	17			100 V DC / 250 V AC; 240 W /	.7	
	18			2000 VA; minimum load: 24 V, 10 mA	.19 *)	

Table 4-4 *For terminal strip X429 on SCI1, see function diagrams Z15 and Z16*

Example	X437	Internal circuit	Function, information	BINECTOR		BINECTOR inverted	Note
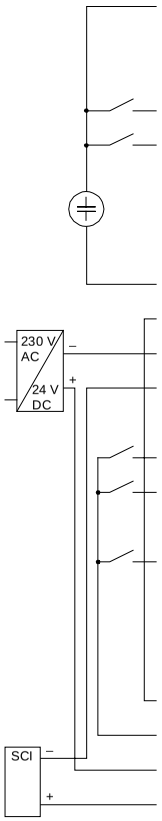	A1	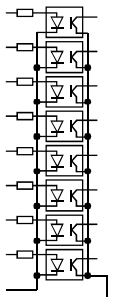	Digital input 9	4x08	4x09	4x28	
	A2		Digital input 10	4x09	4x10	4x29	
	A3		Digital input 11	4x10	4x11	4x30	for slave 1: x = 1
	A4		Digital input 12	4x11	4x12	4x31	for slave 2: x = 2
	A5		Digital input 13	4x12	4x13	4x32	
	A6		Digital input 14	4x13	4x14	4x33	
	A7		Digital input 15	4x14	4x15	4x34	
	A8		Digital input 16	4x15	4x16	4x35	
	A9		Reference point for digital inputs 9 to 16				
	A10		Auxiliary voltage M for digital inputs				
	A11		Power supply M (external power-supply connection)				
	A12		Power supply M (external power-supply connection)				
	B1	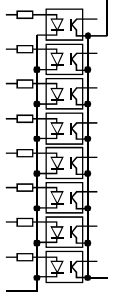	Digital input 1 [1])	4x00	4x01	4x20	
	B2		Digital input 2	4x01	4x02	4x21	
	B3		Digital input 3	4x02	4x03	4x22	
	B4		Digital input 4	4x03	4x04	4x23	
	B5		Digital input 5	4x04	4x05	4x24	
	B6		Digital input 6	4x05	4x06	4x25	
	B7		Digital input 7	4x06	4x07	4x26	
	B8		Digital input 8	4x07	4x08	4x27	
	B9		Reference point for digital inputs 1 to 8				
	B10	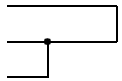	Auxiliary voltage P24 V DC, 400 mA / 20 °C additionally with X438/A5				
	B11		Power supply P24 V DC (external power-supply connection)				
	B12		Power supply P24 V DC (external power-supply connection)				

Table 4-5 For terminal strip X437 on SCI2, see function diagrams Z30 or Z31

[1]) In order to avoid accidental switch-on when the voltage is restored after a voltage failure, digital input 1 should be used for the ON command. See Chapter 4.1.3, "Behavior of the digital inputs"

Example	X438	Internal circuit	Function, information	Parameter	Note
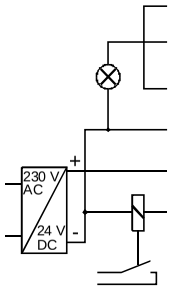				P698	
	A1		Digital output 11, driver 24 V DC	.11	
	A2		Digital output 11, driver 100 mA ext., short-circuit proof	.23 *)	
	A3		Digital output 12, driver 24 V DC	.12	
	A4		Digital output 12, driver 100 mA ext., short-circuit proof	.24 *)	
	A5	—	Auxiliary voltage P24 V, 400 mA / 20°C additionally with X437/B10		
	A6	—	Auxiliary voltage M for digital outputs		Connect A1, A3, B1, B3 and B5 with P24 V DC (A5) or with external P24 V DC supply referred to M (A6) (see example)
	B1		Digital output 8, driver 24 V DC	.8	
	B2		Digital output 8, driver 100 mA ext., short-circuit proof	.20 *)	
	B3		Digital output 9, driver 24 V DC	.9	
	B4		Digital output 9, driver 100 mA ext., short-circuit proof	.21 *)	
	B5		Digital output 10, driver 24 V DC	.10	*) Input of the relevant quantities in P698; for slave 1 indices 11, 12, 8, 9 and 10; for slave 2 indices 23, 24, 20, 21 and 22
	B6		Digital output 10, driver 100 mA ext., short-circuit proof	.22 *)	

Table 4-6 For terminal strip X438 on SCI2, see function diagrams Z35 and Z36

Example	X439	Internal circuit	Function, information		Parameter	Note
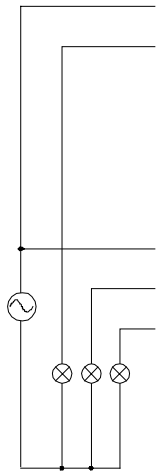		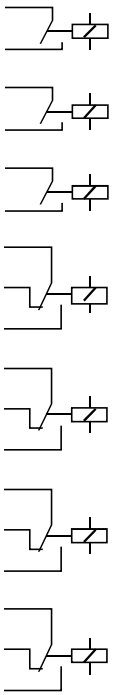			P698	The relays of the digital outputs are not designed for protective isolation when operated at 230 V. *) Input of the relevant quantities in P698; for slave 1, indices 1, 2, 3, 4, 5, 6, 7; for slave 2, indices 13, 14, 15, 16, 17, 18, 19
	1		Digital output 1:	NO contact 100 V DC / 250 V AC;	.1	
	2			240 W / 2000 VA; min.: 24 V, 10 mA	.13	
	3		Digital output 2:	NO contact 100 V DC / 250 V AC;	.2	
	4			240 W / 2000 VA; min.: 24 V, 10 mA	.14	
	5		Digital output 3:	NO contact 100 V DC / 250 V AC;	.3	
	6			240 W / 2000 VA; min.: 24 V, 10 mA	.15	
	7		Digital output 4:	Changeover contact		
	8			100 V DC / 250 V AC; 240 W /	.4	
	9			2000 VA; minimum load: 24 V, 10 mA	.16	
	10		Digital output 5:	Changeover contact		
	11			100 V DC / 250 V AC; 240 W /	.5	
	12			2000 VA; minimum load: 24 V, 10 mA	.17	
	13		Digital output 6:	Changeover contact		
	14			100 V DC / 250 V AC; 240 W /	.6	
	15			2000 VA; minimum load: 24 V, 10 mA	.18	
	16		Digital output 7:	Changeover contact		
	17			100 V DC / 250 V AC; 240 W /	. 7	
	18			2000 VA; minimum load: 24 V, 10 mA	.19	

Table 4-7 For terminal strip X439 on SCI2, see function diagrams Z35 and Z36

4.1.2 Start-up

Setting the slave address:

Slave address 1: the S1 switch on SCI open
Slave address 2: the S2 switch on SCI closed

Examples:

Only 1 SCI available: can be addressed as either slave 1 or 2

2 slaves available: 1 x address 1, 1 x address 2

NOTE

After switching of the S1 switch, the slave address of the SCI is detected by the basic board only after re-initialization of the SCI boards

The SCI boards are re-initialized when the supply voltage for the SCI boards is switched on/off.

In the event of incorrect addressing (same slave addresses), alarm A049 or A050 is output or the LED displays of the board flash irregularly.

Parameterizing the SCB:

- Change to status "hardware settings":
  P060 / P052 = 4
- Enter hardware configuration:
  SCB in slot 2 (right): P090 = 3
  SCB in slot 3 (middle): P091 = 3
- Parameterize the SCB for serial I/O system
  P696 / P682 (SCB protocol) = 0 (master for SCI = default setting)
- Leave "Hardware settings":
  P060 / P052 = 0

Parameterizing digital inputs / control-word bits

The digital inputs can be used for every binector input parameter.

The digital inputs are parameterized by means of parameters P554 – P591. See operating instructions for the basic unit.

Parameterizing analog inputs

The analog inputs are parameterized by means of parameters P690 – P692 / P660 – P662
(see also operating instructions of the basic unit)

Indices of parameters P690 – P692 (P690.x – P692.x)
P660 – P662 (P660.x – P662.x):

Index x for P690 – P692 / P660 – P662	Description
i001	Slave 1, analog input 1
i002	Slave 1, analog input 2
i003	Slave 1, analog input 3
i004	Slave 2, analog input 1
i005	Slave 2, analog input 2
i006	Slave 2, analog input 3

Data of the analog inputs:

Resolution: 11 bits + sign

Typical accuracy: < 0.5 % for voltage input,
< 0.7 % for current input

Configuration of the analog inputs
(P690.x / P660.x; Index x, see above):

Parameter value P690.x / P660.x	Description
0	0 V to 10 V or 0 mA to 20 mA
1	–10 V to +10 V or –20 mA to +20 mA
2	4 mA to 20 mA with wire-break monitoring

Smoothing of the analog inputs (P691.x / P661.x; Index x, see above):

Parameter value P691.x / P661.x	Description
1 ... 15	Smoothing time constant = 2 ms $\times$ $2^{(P691.x-1)}$ (max.: P691.x = 15 corresponds to approx. 65 s)
	Smoothing time constant = 2 ms $\times$ $2^{(P661.x-1)}$ (max.: P661.x = 15 corresponds to approx. 65 s)
0	No smoothing

Offset of the analog inputs (P692.x / P662.x; Index x, see above):

Setting range $\pm$ 20 V;
For an example, see operating instructions of the basic unit.

Parameterizing digital outputs

For the parameter values for the digital outputs, see binector list in the compendium.

See operating instructions of the basic unit.

Parameterizing analog outputs

The analog outputs are parameterized by means of parameters P693 – P695 / P664 – P666
(see also operating instructions of the basic unit).

Indices of parameters P693 – P695 (P693.x – P695.x)
P664 – P666 (P664.x – P666.x):

Index x for P693 – P695 / P664 – P666	**Description**
i001	Slave 1, analog output 1
i002	Slave 1, analog output 2
i003	Slave 1, analog output 3
i004	Slave 2, analog output 1
i005	Slave 2, analog output 2
i006	Slave 2, analog output 3

Data of the analog inputs:

Resolution: 11 bits + sign

Typical accuracy: < 0.5 % for voltage output,
< 0.7 % for current output

Specification of the quantities to be output (P693 / P664), of amplification (P694 / P665) and of the offset (P695 / P666) in accordance with the operating instructions of the basic unit).

4.1.3 Behavior of the digital inputs

NOTES

In order to prevent an undesirable restart when the voltage is restored after a power failure, terminal 1 should be used for an ON command; power-up then only takes place when the input signal changes from L -> H

If the fiber-optic cable is interrupted, the last signal, present at the binary input, is still signaled to the basic converter; when the bus connection is re-established, the signal then available is transferred.

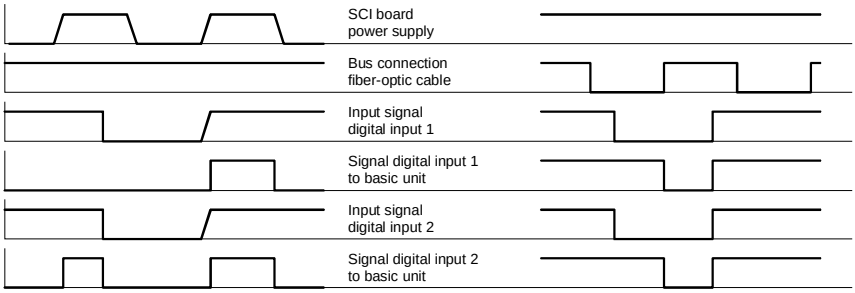

4.2 Peer-to-peer

4.2.1 Connecting-up

NOTES

Use a sharp knife to cut the fiber-optic cables at right angles to the cable.
Ensure that the ends of the fiber-optic cable are not dirtied.

When the fiber-optic cable is being laid, a minimum bending radius of 3 cm must be complied with.

Permissible fiber-optic cable length: 0.3 m to 10 m.

Spare-part MRPD for fiber-optic cable 6SY7000-0AC43 (by the meter)
Type of fiber-optic cable:
CUPO-Flex plastic fiber-optic cable CA-1V2Y1P980/1000 200A

Connection of the fiber-optic cable:

1. Loosen knurled nut
2. Plug in fiber-optic cable **up to the stop**
3. Tighten knurled nut until the fiber-optic cable can no longer be pulled out.

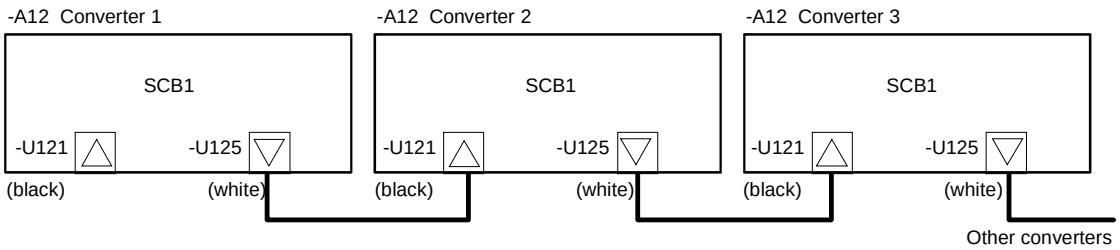

Fig. 4-3 Connecting example of peer-to-peer via fiber-optic cable

Function	Connection
Receiver	U121
Transmitter	U125

Table 4-8 Fiber-optic cable terminals on the SCB1

4.2.2 Start-up

Parameterizing the SCB

- Change to the status "Hardware settings":
  P060 / P052 = 4
- Enter hardware configuration:
  SCB in slot 2 (right): P090 = 3
  SCB in slot 3 (middle): P091 = 3
- Parameterize the SCB for peer-to-peer connection
  P696 / P682 (SCB protocol) = 3 (peer-to-peer)
- Leave "Hardware settings":
  P060 / P052 = 0

Setting the baud rate

P701, Index i003 / P684, Index i002:

Parameter values P701.3 / P684.2	Baud rate	Parameter values P701.3 / P684.2	Baud rate
1	300 baud	8	38400 baud
2	600 baud	9	57600 baud
3	1200 baud	10	76800 baud
4	2400 baud	11	93750 baud
5	4800 baud	12	115200 baud
6	9600 baud	13	187500 Baud
7	19200 Baud		

For baud rates greater than 38400 baud (parameter value > 8), the following software versions are necessary:

SCB software version		above 1.2
Basic-unit software:	SIMOVERT FC, SIMOVERT VC	above 1.1
	SIMOVERT SC	above 1.0

For a baud rate of 187500 baud, the board must also have a product status higher than D.

Setting the number of process data

P703, Index i003 / P686, Index i002 (SST/SCB PcD #)

Specify the number of 16-bit process data to be transferred.
A 32-bit value corresponds to two 16-bit values.

Allowed values: 1 to 5 words

Example

Receive:
Control word 1 (16 bits)
Main setpoint SIMOVERT VC (32 bits) } 3 process data

Transmit:
Status word 1 (16 bits)
Actual value of output voltage (16 bits) } 2 process data

→ P703.3 / P686.2 = 3; in the transmit telegram, the 3rd word is not used

NOTE

Baud rate and number of process data (control word bits, status word bits, setpoints) must be the same for transmitter and receiver.

Setting the telegram failure time

P704 (SST/SCB TlgOFF), Index i003 (SCB) / P687, Index i002

Parameter value P704.3 / P687.2	Description
0	No fault trip in the event of telegram failure
n	Fault trip n ms after telegram failure

Specifying actual values and status word

5 telegram words are available.
For the transmitting unit, the contents of the individual telegram words are defined by means of P706 / P690.

P706 is a BICO parameter for selecting the connectors which are to be transmitted from the serial interface on the SCB. In addition to the connectors, their place in the transmit telegram are defined as well.

Index 1: Word 1 in the PZD part of the telegram
Index 2: Word 2 in the PZD part of the telegram
...

Word 1 should be occupied by control word 1 (K0030).

In the case of double words (KK connectors), the associated connector number must have been entered at two sequential indices because, otherwise, only the higher-value word is transmitted.

P690 is a parameter for selecting the parameters which are to be sent from the serial interface on the SCB. In addition to the parameters, their place in the transmission telegram is also defined:

Index 1: Word 1 in the PZD part of the telegram
Index 2: Word 2 in the PZD part of the telegram
...

Word 1 should be occupied by control word r550.

In the case of double words, the associated connector number must have been entered at two sequential indices because, otherwise, only the higher-value word is transmitted.

The number of words transmitted in the PZD part of the telegram is defined in P703, Index i003 / P686, Index i002 (number of process data) **(a maximum of 5 in the case of peer-to-peer)**.

Example (see also diagram on page 4-18):

Unit n (transmitter):

- Control word 1 (K0030 / r550) of the transmitting unit n is transferred in telegram word 1 (Index i001 in P706 / P690) to the receiving unit n+1:
  → P706.1 = 0030 / P690.1 = r550
- The actual frequency (KK0091 / r218) is transferred in telegram word 2 (Index i002 in P706 / P690):
  → P706.2 = 0091 / P690.2= r218

Defining control and setpoint inputs

1. Any bit of words 1 to 5 received via the SCB can be assigned to each parameter which accepts freely connectable digital signals (e.g. P554.x On/Off1).

   B 4500 – B 4515 SCB 1st word
   B 4600 – B 4615 SCB 2nd word
   B 4700 – B 4715 SCB 3rd word
   B 4800 – B 4815 SCB 4th word
   B 4900 – B 4915 SCB 5th word

   Example:

   In the case of unit n+1, the On/Off1 command is taken by telegram word 1 / bit 1:
   → P554.1 = 4500

   In the case of the receiving unit, the control word bits and the setpoints are softwired (see also operating instructions of the basic unit).

   Parameter value: 45xx, xx = Number of the telegram word.

   Example:

   In the case of unit n+1, the On/Off1 command is taken by telegram word 1:
   → P554.1 = 4501 (‚01‘ = Telegram word 1)

   In the case of unit n+1, the actual frequency of unit n transferred by means of telegram word 2 is taken:
   → P443.1 = 4502 (‚02 = Telegram word 2

2. Any of words 2 to 5 received via the SCB can be assigned to each parameter which accepts freely connectable 16-bit or 32-bit signals.

   K 4501 – K 4505 SCB word 1 to SCB word 5

   In the case of double-word transmission, the following applies:

   KK 4532 – KK 4534 SCB D-word 2 to SCB D-word 4

   Example:

   In the case of unit n+1, the actual frequency of unit n transferred by means of telegram word 2 is taken:

   → P443.1 = 4502

   If a 32-bit word is to be received, the corresponding parameter must also be suitable for the reception of double words (see parameter list).

   See operating instructions of the basic unit and function diagrams Z05.

NOTE

If the ON/OFF1 command is given via peer-to-peer and switch-off in the case of telegram failure has been parameterized by means of P704 / P687, an OFF2 or OFF3 command must also be parameterized on the terminal strip or the PMU because, otherwise, the unit can no longer be switched off after a telegram failure.

Passing on telegram words

Additional handling of the received telegram words:

Telegram words are always available to the receiving unit and can also be passed on directly to the next unit (P705.x / P689.x, x = Number of the telegram word). The transmission dead time can thus be reduced.

Parameter value P705.x / 689.x	Description
0	Telegram word x is not passed on
1	Telegram word x is passed on

Example (see also diagram on 4-18):

Unit n+1:

- The received control word in telegram word 1 (Index i001 in P705 / P689) is immediately passed on to the next unit
  → P705.1 / P689.1 = 1
- The received setpoint in telegram word 2 (Index i002 in P705 / P689) is not passed on.
  → P705.2 / P689.2 = 0.

NOTE

If a telegram word is directly passed on by means of P705.x / P689.x = 1, any contradictory information for the same telegram word in P706.x / P690.x is ignored.

Example:

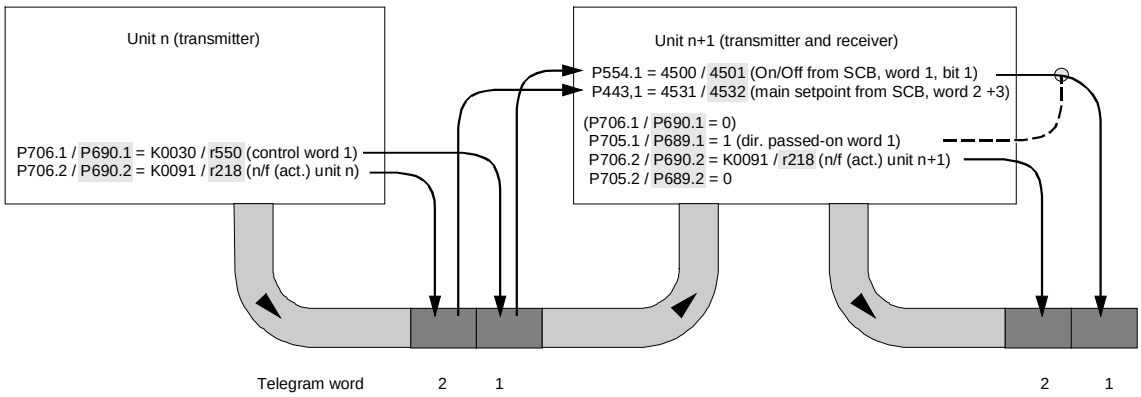

4.3 Significant visualization parameters

r069 / r770 Software version of the board
r697 / r730 SCB diagnosis (see parameter list for basic unit)
r826 / r723 Board code for identifying the board

Indices of parameters r069 / r770, r697 / r730, r826 / r723:

Index x for parameters r069 / r770, r697 / r730, r826 / r723	**Position**
i001	Basic board
i002	Slot A
i003	Slot B
i004	Slot C
i005	Slot D
i006	Slot E
i007	Slot F
i008	Slot G
If a technology board (T100, T300, TSY) or an SCB1 or SCB2 is used in slots 3 or 2, their code is as follows:	
i005	Slot 2
i007	Slot 3

Board configuration

Visualization parameters r826.x / r723 are for displaying the board code. This code can be used to determine the type of electronics board installed.

Board code	**Description**
90 to 109	Mainboard or Control Unit
110 to 119	Sensor Board (SBx)
120 to 129	Serial Communication Board (SCBx)
121	SCB1
122	SCB2
130 to 139	Technology Board
140 to 149	Communication Board (CBx)
150 to 159	Special boards (EBx, SLB)

5 Locating Faults

The fault and alarm messages are described in the operating instructions for the basic unit.

LED display on the boards:

- Continuously lit or continuously dark:
  Error: e.g. no connection to the CU control board or board fault
- Flashing, 0.5 Hz:
  Correct operation
- Flashing, 5 Hz (only SCI):
  Erroneous communications; e.g. fiber-optic cable ring not connected, second slave in a no-voltage condition
- Flashing, 12 Hz: (only SCI):
  No telegram transfer; e.g. fiber-optic cable not connected
- Irregular flashing (only SCI):
  Slave addresses the same; e.g. S1 of both slaves closed)

6 Technical Data

Board name	**SCB1, Serial Communication Board 1**	**SCI1, Serial Communication Interface 1**	**SCI2, Serial Communication Interface 2**
Order No.	6SE7090-0XX84-0BC0	6SE7090-0XX84-3EA0	6SE7090-0XX84-3EF0
Rated input voltage	5 V ± 5 %, 580 mA, internal from the converter	24 V –17 % +25 %, 1 A external	24 V –17 % +25 %, 1 A external
Rated output voltage		24 V -17 % +25 %, 200 mA for binary On/Off	
Data transfer interface	Fiber-optic cable Peer-to-peer Peer-to-peer / serial I/O	Serial I/O	
Operating temperature	0 °C to +55 °C (32 °F to 131 °F)		
Storage temperature	–25 °C to +70 °C (–13 °F to 158 °F)		
Transport temperature	–25 °C to +70 °C (–13 °F to 158 °F)		
Environmental conditions • Climate class: • Pollutant stress:	 3K3 to DIN IEC 721 Part 3-3 / 04.90 3C2 to DIN IEC 721 Part 3-3 / 04.90		
Pollution degree	2 DIN VDE 0110 Part 1/01.89. Moisture condensation not permissible		
Overvoltage class	III DIN VDE 0110 Part 2 / 01.89		
Degree of protection	IP00 DIN VDE 0470 Part / 11.92 ≙ EN 60529		
Mechanical stability	DIN IEC 68-2-6 / 06.90		
	Frequency range Hz	Constant amplitude of deflection mm	 acceleration m/s^2 (g)
• For stationary applications	10 to 60	0.35	
	above 60 to 500		49 (5)
• During transport	5 to 9	3.5	
	above 9 to 500		9.8 (1)

Table 6-1 Technical data

Bisher sind folgende Ausgaben erschienen:

Ausgabe	Interne Sachnummer
AA	477 412 4000 76 J AA-74

Ausgabe AA besteht aus folgenden Kapiteln:

Kapitel		Änderungen	Seitenzahl	Ausgabedatum
1	Definitionen und Warnungen	Erstausgabe	3	10.98
2	Produktbeschreibung	Erstausgabe	1	10.98
3	Einbau	Erstausgabe	3	10.98
4	Anschließen und Inbetriebsetzen	Erstausgabe	19	10.98
5	Fehlersuche	Erstausgabe	1	10.98
6	Technische Daten	Erstausgabe	1	10.98

The following editions have been published so far:

Edition	Internal Item Number
AA	477 412 4000 76 J AA-74

Version AA consists of the following chapters:

Chapter		Changes	Pages	Version date
1	Definitions and Warnings	first edition	3	10.98
2	Product Description	first edition	1	10.98
3	Installation	first edition	3	10.98
4	Connection and Start-up	first edition	19	10.98
5	Locating Faults	first edition	1	10.98
6	Technical Data	first edition	1	10.98

Group: Automation and Drives (A&D)
Division: Variable-Speed Drive Systems
Postfach 3269, D-91050 Erlangen

Siemens Aktiengesellschaft

Subject to change

Order No.: 6SE7087-6CX84-0BC0
Printed in the Federal Republic of Germany
10.98

SIEMENS

SIMOVERT MASTERDRIVES

Betriebsanleitung
Operating Instructions

SCB2 – Serielle Kommunikationsbaugruppe 2
SCB2 – Serial Communication Board 2

Ausgabe / Edition AA

Bestell-Nr. / Order No.: 6SE7087-6CX84-0BD0

Contents

1 DEFINITIONS AND WARNINGS 1-1

2 PRODUCT DESCRIPTION 2-1

2.1 USS interface 2-1

2.2 Peer-to-peer connection 2-1

3 INSTALLATION 3-1

4 CONNECTION AND START-UP 4-1

4.1 Serial interface (USS) 4-2
4.1.1 Connection 4-2
4.1.2 Start-up 4-3

4.2 Peer-to-peer 4-7
4.2.1 Connection 4-7
4.2.2 Start-up 4-7

4.3 Significant visualization parameters 4-12

5 LOCATING FAULTS 5-1

6 TECHNICAL DATA 6-1

1 Definitions and Warnings

Qualified personnel

For the purpose of this documentation and the product warning labels, a "Qualified person" is someone who is familiar with the installation, mounting, start-up, operation and maintenance of the product. He or she must have the following qualifications:

- Trained or authorized to energize, de-energize, ground and tag circuits and equipment in accordance with established safety procedures.
- Trained or authorized in the proper care and use of protective equipment in accordance with established safety procedures.
- Trained in rendering first aid.

DANGER



For the purpose of this documentation and the product warning labels, "Danger" indicates death, severe personal injury or substantial property damage will result if proper precautions are not taken.

WARNING



For the purpose of this documentation and the product warning labels, "Warning" indicates death, severe personal injury or property damage can result if proper precautions are not taken.

CAUTION



For the purpose of this documentation and the product warning labels, "Caution" indicates that minor personal injury or material damage can result if proper precautions are not taken.

NOTE

For the purpose of this documentation, "Note" indicates important information about the product or about the respective part of the documentation which is essential to highlight.

WARNING



Hazardous voltages are present in this electrical equipment during operation.

Non-observance of the warnings can thus result in severe personal injury or property damage.

Only qualified personnel should work on or around the equipment

This personnel must be thoroughly familiar with all warning and maintenance procedures contained in this documentation.

The successful and safe operation of this equipment is dependent on correct transport, proper storage and installation as well as careful operation and maintenance.

NOTE

This documentation does not purport to cover all details on all types of the product, nor to provide for every possible contingency to be met in connection with installation, operation or maintenance.

Should further information be desired or should particular problems arise which are not covered sufficiently for the purchaser's purposes, the matter should be referred to the local SIEMENS sales office.

The contents of this documentation shall not become part of or modify any prior or existing agreement, commitment or relationship. The sales contract contains the entire obligation of SIEMENS AG. The warranty contained in the contract between the parties is the sole warranty of SIEMENS AG. Any statements contained herein do not create new warranties or modify the existing warranty.

CAUTION



Components which can be destroyed by electrostatic discharge (ESD)

The board contains components which can be destroyed by electrostatic discharge. These components can be easily destroyed if not carefully handled. If you have to handle electronic boards, please observe the following:

Electronic boards should only be touched when absolutely necessary.

The human body must be electrically discharged before touching an electronic board.

Boards must not come into contact with highly insulating materials - e.g. plastic parts, insulated desktops, articles of clothing manufactured from man-made fibers.

Boards must only be placed on conductive surfaces.

Boards and components should only be stored and transported in conductive packaging (e.g. metalized plastic boxes or metal containers).

If the packing material is not conductive, the boards must be wrapped with a conductive packaging material, e.g. conductive foam rubber or household aluminium foil.

The necessary ESD protective measures are clearly shown again in the following diagram:

- a = Conductive floor surface
- b = ESD table
- c = ESD shoes
- d = ESD overall
- e = ESD chain
- f = Cubicle ground connection

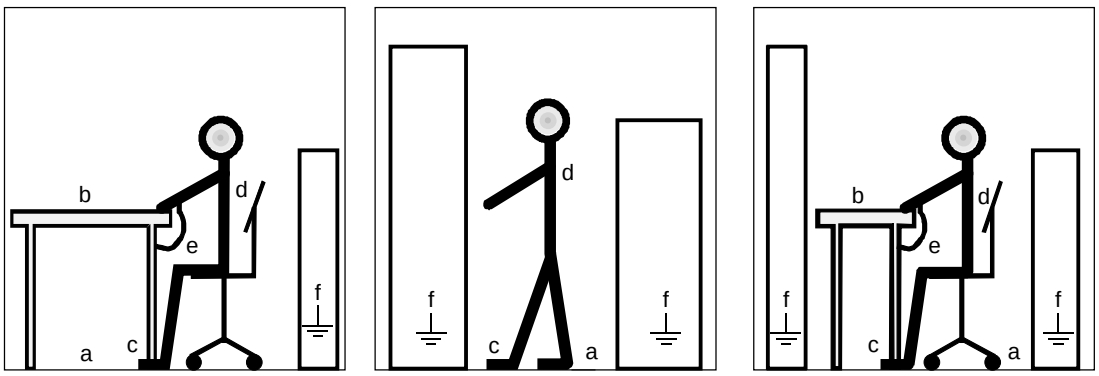

Fig. 1-1 ESD protective measures

2 Product Description

The SCB2 board (Serial Communication Board 2) supplements converters of the SIMOVERT MASTERDRIVES series by providing

- an additional serial interface, based on the USS protocol, or
- a peer-to-peer connection for rapid transfer, e.g. of setpoints between various converters.

In order to connect the SCB to the CU control board, the local bus adapter LBA (Order No.: 6SE7090-0XX84-4HA0) in the electronics box is used.

2.1 USS interface

Up to 31 slaves (converters) can be controlled from a central master (automation unit, e.g. PC, PLC). For a more detailed description, see "SIMOVERT MASTERDRIVES: Use of serial interfaces with the USS protocol", Order No: 6SE7087-6CX87-4KB0.

2.2 Peer-to-peer connection

Several converters are connected in a multi-motor drive to create a fast setpoint cascade, for example, or are connected serially via the SCB board for common switch-on.

3 Installation

CAUTION



The boards contain components which can be damaged by electrostatic discharge; these boards can be destroyed if incorrectly handled.

Please comply with the guidelines in the operating instructions for the basic converter.

In order to install optional boards in the electronics box, the LBA (Local Bus Adapter) must first have been mounted.

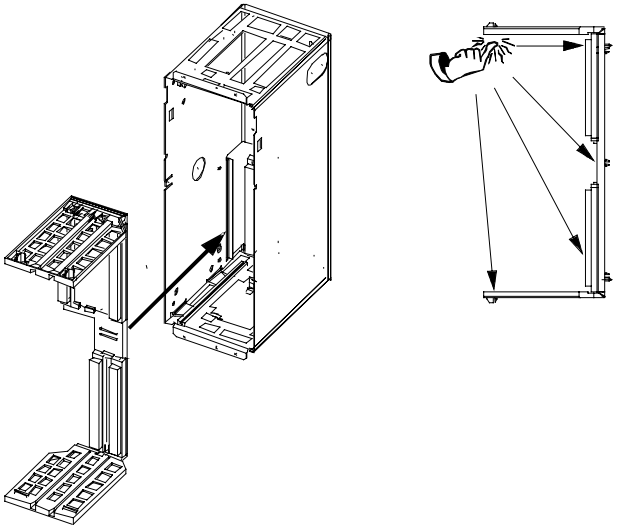

Fig. 3-1 Installation of the Local Bus Adapter

Installing the LBA bus expansion

- Take out the CU (left-hand-side slot in the electronics box) using the handles after first removing the connecting cable to the PMU and both retaining screws
- Insert the LBA bus expansion in the electronics box (for position, refer to diagram) so that it snaps into place
- Re-insert the CU into the left-hand slot, screw the retaining screws on the handles tight, and plug in the connecting cable to the PMU
- Insert the optional board in slot 2 (right) or slot 3 (center) of the electronics box and screw into place. Only one of each type of optional board may be inserted in the electronics box. If only one optional board is inserted, then it must always be at slot 2 (right).

Examples of possible arrangements

Slot 1	Slot 3	Slot 2
CU	---	SCB
CU	SCB	Tx00
CU	CBx	SCB
CU	TSY	SCB

NOTE

If used as a serial USS interface:
At the last bus node (last slave board on the bus), the bus terminating resistors must be connected by closing the S1 switch.

NOTE

Please note the differences in basic parameterization (described below) in comparison to those units with the older function classes, FC (CU1), VC (CU2) and SC (CU3).

To facilitate distinction, these parameter numbers and other deviations are printed on a dark-grey background.

4 Connection and Start-up

WARNING



SIMOVERT MASTERDRIVES converters are operated at high voltages.

Only qualified personnel may work on the units.

Non-compliance with these warning guidelines can result in death, severe bodily injury or considerable material damage.

Due to the DC-link capacitors, the converter still contains hazardous voltage levels up to 5 minutes after the power has been disconnected. The unit must not be opened, therefore, until after an appropriate waiting period.

The power and control terminals can still contain hazardous potential, even if the motor is stationary.

When working on an opened unit, it should be borne in mind that live components are exposed.

The user is responsible for ensuring that the motor, converter and any other equipment is installed, mounted and connected-up according to the rules recognized in the country where they are installed (in Germany: VDE, VBG4) and according to other regionally valid regulations. Special attention should be paid to cable dimensioning, fusing, grounding, disconnection, isolation and overcurrent protection.

4.1 Serial interface (USS)

4.1.1 Connection

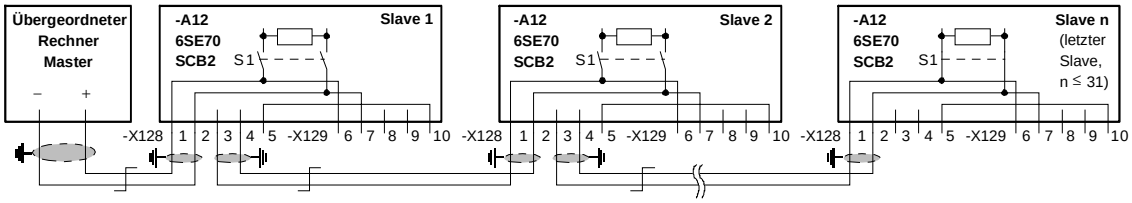

Fig. 4-1 *Connecting example 1:*
SCB2 as a serial interface based on the USS protocol;
the bus connection is interrupted if one of the X128 connectors is pulled out.

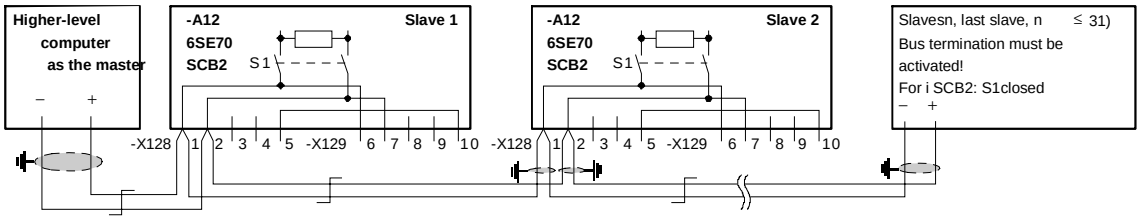

Fig. 4-2 *Connecting example 2:*
SCB2 as a serial interface based on the USS protocol;
the bus connection is maintained if one of the X128 connectors is pulled out.

Terminals	Function	Notes
X128.1	Cable 1	RS 485 R/T+
X128.2	Cable 1	RS 485 R/T–
X128.3	Cable 2	RS 485 R/T+
X128.4	Cable 2	RS 485 R/T–
X128.5	⏚	Ground

Table 4-1 *X128 terminal strip on SCB2 for USS 2-wire*

Terminals	Function	Notes
X129.6	Input	RS 485 R+
X129.7	Input	RS 485 R–
X129.8	Output	RS 485 T+
X129.9	Output	RS 485 T–
X129.10	⏚	Ground

Table 4-2 *X129 terminal strip on SCB2 USS 4-wire*

4.1.2 Start-up

Parameterizing the SCB

- Change to status "hardware settings":
  P060 / P052 = 4
- Enter hardware configuration:
  SCB in slot 2 (right): P090 = 3
  SCB in slot 3 (middle): P091 = 3
- Parameterize the SCB for USS protocol
  P696 / P682 (SCB protocol) = 1 (4-wire USS) or
  P696 / P682 (SCB protocol) = 2 (2-wire USS)
- Leave "Hardware settings":
  P060 / P052 = 0

Setting the bus address

P700, Index i003 / P683, Index i002:

bus addresses n (0 ... 31)

→ P700.3 / P683.2 = n

Setting the baud rate

P701, Index i003 / P684, Index i002:

Parameter values P701.3 / P684.2	Baud rate	Parameter values P701.3 / P684.2	Baud rate
1	300 baud	8	38400 baud
2	600 baud	9	57600 baud
3	1200 baud	10	76800 baud
4	2400 baud	11	93750 baud
5	4800 baud	12	115200 baud
6	9600 baud	13	187500 baud
7	19200 baud		

For baud rates greater than 38400 baud (parameter value > 8), the following software versions are necessary:

SCB software version		above 1.2
Basic-unit software:	SIMOVERT FC, SIMOVERT VC	above 1.1
	SIMOVERT SC	above 1.0

For a baud rate of 187500 baud, the board must also have a product status higher than D.

Setting the number of PKWs

P702, Index i003 / P685, Index i002 (SCom/SCB number of PKWs

Parameter value P702.3 / P685.2	Description
0	No parameter data to be transmitted
3	3 words of parameter data (fixed)
4	4 words of parameter data (fixed)
127	Parameter data with variable length

Setting the number of process data

P703, Index i003 / P686, Index i002 (SCom/SCB PKW #)

Specify the number of 16-bit process data to be transferred.
A 32-bit value corresponds to two 16-bit values.

Allowed values: 0 to 16 words

Example

Receive:
Control word 1 (16 bits)
Main setpoint SIMOVERT VC (32 bits) } 3 process data

Transmit:
Status word 1 (16 bits)
Actual value of output voltage (16 bits) } 2 process data

→ P706.2 / P686.2 = 3; in the transmit telegram, the 3rd word is not used

NOTE

Baud rate, number of PKWs and number of process data (control word bits, status word bits, setpoints) must be the same for transmitter and receiver.

Setting the telegram failure time

P704 (SCom/SCB TlgOFF), Index i003 (SCB) / P687, Index i002:

Parameter value P704.3 / P687.2	Description
0	No fault trip in the event of telegram failure
n	Fault trip n ms after telegram failure

Setting parameterization enable

P053

If parameterization is to be carried out via the SCB interface, set parameterization enable for the SCB interface:

→ P053 = 8

Parameter values P053	Parameterization enable for
0	–
1	ComBoard CBx
2	Base Keypad PMU
4	Base Serial 1 (SCom1)
8	SCB2 with USS
16	TechBoard Tx00
32	Base Serial 2 (SCom2)

If parameterization enable is to be issued for several positions, the total of the corresponding parameter values is to be entered in P053:
e.g. parameterization enable for the PMU, serial interface SCom1 and SCB:
→ P053 = 2 + 4 + 8 = 14

Specifying control and setpoint inputs

1. Any bit of words 1 to 5 received via the SCB can be assigned to each parameter which accepts freely connectable digital signals (e.g. P554.x On/Off1).

   B 4500 – B 4515 SCB 1st word
   B 4600 – B 4615 SCB 2nd word
   B 4700 – B 4715 SCB 3rd word
   B 4800 – B 4815 SCB 4th word
   B 4900 – B 4915 SCB 5th word

   Example:

   In the case of unit n+1, the On/Off1 command is taken by telegram word 1 / bit 1:
   → P554.1 = 4500

   Selection of the control-word bits which are to be specified via SCB2 / USS: Parameter value 45xx, xx = Telegram word – see operating instructions for basic unit

   Selection of setpoints which are to be specified via USS: Parameter value 45xx, xx = Telegram word –
   see operating instructions for basic unit

2. Any of words 2 to 5 received via the SCB can be assigned to each parameter which accepts freely connectable 16-bit or 32-bit signals.

   K 4501 – K 4516 SCB word 1 to SCB word 16

   In the case of double-word transmission, the following applies:

   KK 4532 – KK 4545 SCB D-word 2 to SCB D-word 15

Example:

In the case of unit n+1, the actual frequency of unit n transferred by means of telegram word 2 is taken:

→ P443.1 = 4502

If a 32-bit word is to be received, the corresponding parameter must also be suitable for the reception of double words (see parameter list).

See operating instructions of the basic unit and function diagrams Z05.

NOTE

If the ON/OFF1 command is given via USS and switch-off in the case of telegram failure has been parameterized by means of P704 / P687, an OFF2 or OFF3 command must also be parameterized on the terminal strip or the PMU because, otherwise, the unit can no longer be switched off after a telegram failure.

Status word, actual value

Enter the status word and the actual values which are to be sent via USS in P706.x / P690.x, whereby x = telegram word
– see operating instructions for basic unit and function diagram Z06

Example:

- The converter accepts the following from the automation unit:
  - On/Off command, acknowledge and external fault from control word 1 in telegram word 1
  - Main setpoint from telegram word 2
- The converter transmits the following to the converter:
  - Status word 1 in telegram word 1
  - Actual value n/f (act.) in telegram word 2

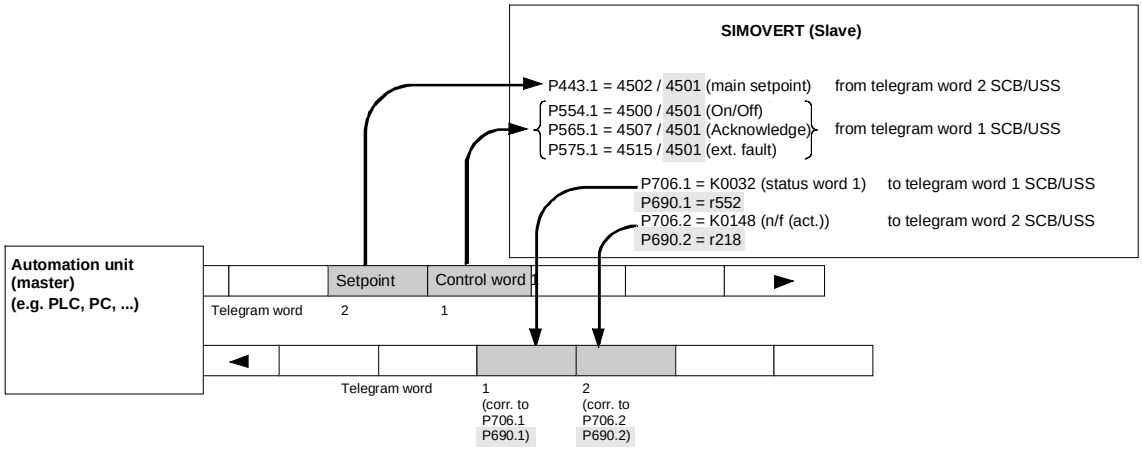

4.2 Peer-to-peer

4.2.1 Connection

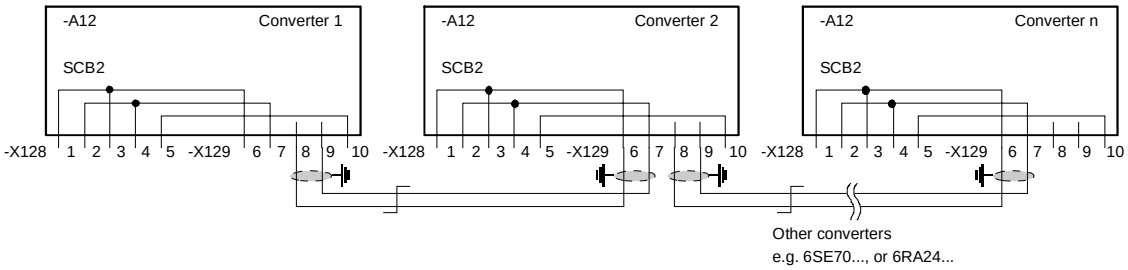

Fig. 4-3 Connecting example, peer-to-peer

NOTE

Screened twisted cables with the screen connected at both ends must be used for the peer-to-peer connection.

4.2.2 Start-up

Parameterizing the SCB

- Change to the status "Hardware settings":
  P060 / P052 = 4
- Enter hardware configuration:
  SCB in slot 2 (right): P090 = 3
  SCB in slot 3 (middle): P091 = 3
- Parameterize the SCB for peer-to-peer connection
  P696 / P682 (SCB protocol) = 3 (peer-to-peer)
- Leave "Hardware settings":
  P060 / P052 = 0

Setting the baud rate

P701, Index i003 / P684, Index i002:

Parameter values P701.3 / P684.2	Baud rate	Parameter values P701.3 / P684.2	Baud rate
1	300 baud	8	38400 baud
2	600 baud	9	57600 baud
3	1200 baud	10	76800 baud
4	2400 baud	11	93750 baud
5	4800 baud	12	115200 baud
6	9600 baud	13	187500 baud
7	19200 baud		

For baud rates greater than 38400 baud (parameter value > 8), the following software versions are necessary:

SCB software version		above 1.2
Basic-unit software:	SIMOVERT FC, SIMOVERT VC	above 1.1
	SIMOVERT SC	above 1.0

For a baud rate of 187500 baud, the board must also have a product status higher than D.

Setting the number of process data

P703, Index i003 / P686, Index i002 (SCom/SCB number of process data)

Specify the number of 16-bit process data to be transferred.
A 32-bit value corresponds to two 16-bit values.

Allowed values: 1 to 5 words

Example

Receive:
Control word 1 (16 bits)
Main setpoint SIMOVERT VC (32 bits) } 3 process data

Transmit:
Status word 1 (16 bits)
Actual value of output voltage (16 bits) } 2 process data

→ P703.3 / P686.2 = 3; in the transmit telegram, the 3rd word is not used

NOTE

Baud rate and number of process data (control word bits, status word bits, setpoints) must be the same for transmitter and receiver.

Setting the telegram failure time

P704 (SCom/SCB TlgOFF), Index i003 (SCB) / P687, Index i002

Parameter value P704.3 / P687.2	Description
0	No fault trip in the event of telegram failure
n	Fault trip n ms after telegram failure

Specifying actual values and status word

5 telegram words are available.
For the transmitting unit, the contents of the individual telegram words are defined by means of P706 / P690.

P706 is a BICO parameter for selecting the connectors which are to be transmitted from the serial interface on the SCB. In addition to the connectors, their place in the transmit telegram are defined as well.

Index 1: Word 1 in the PZD part of the telegram
Index 2: Word 2 in the PZD part of the telegram
...
Word 1 should be occupied by control word 1 (K0030).

In the case of double words (KK connectors), the associated connector number must have been entered at two sequential indices because, otherwise, only the higher-value word is transmitted.

P690 is a parameter for selecting the parameters which are to be sent from the serial interface on the SCB. In addition to the parameters, their place in the transmit telegram is also defined:

Index 1: Word 1 in the PZD part of the telegram
Index 2: Word 2 in the PZD part of the telegram

...

Word 1 should be occupied by control word r550.

In the case of double words, the associated connector number must have been entered at two sequential indices because, otherwise, only the higher-value word is transmitted.

The number of words transmitted in the PZD part of the telegram is defined in P703, Index i003 / P686, Index i002 (number of process data) **(a maximum of 5 in the case of peer-to-peer)**.

Example (see also diagram on page 4-11):

Unit n (transmitter):

- Control word 1 (K0030 / r550) of the transmitting unit n is transferred in telegram word 1 (Index i001 in P706 / P690) to the receiving unit n+1:
  → P706.1 = 0030 / P690.1 = r550
- The actual frequency (KK0091 / r218) is transferred in telegram word 2 (Index i002 in P706 / P690):
  → P706.2 = 0091 / P690.2= r218

Defining control and setpoint inputs

1. Any bit of words 1 to 5 received via the SCB can be assigned to each parameter which accepts freely connectable digital signals (e.g. P554.x On/Off1).

   B 4500 – B 4515 SCB 1st word
   B 4600 – B 4615 SCB 2nd word
   B 4700 – B 4715 SCB 3rd word
   B 4800 – B 4815 SCB 4th word
   B 4900 – B 4915 SCB 5th word

   Example:

   In the case of unit n+1, the On/Off1 command is taken by telegram word 1 / bit 1:
   → P554.1 = 4500

In the case of the receiving unit, the control word bits and the setpoints are softwired (see also operating instructions of the basic unit).

Parameter value: 45xx, xx = Number of the telegram word.

Example:

In the case of unit n+1, the On/Off1 command is taken by telegram word 1:
→ P554.1 = 4501 (‚01' = Telegram word 1)

In the case of unit n+1, the actual frequency of unit n transferred by means of telegram word 2 is taken:
→ P443.1 = 4502 (‚02 = Telegram word 2

2. Any of words 2 to 5 received via the SCB can be assigned to each parameter which accepts freely connectable 16-bit or 32-bit signals.

   K 4501 – K 4505 SCB word 1 to SCB word 5

   In the case of double-word transmission, the following applies:

   KK 4532 – KK 4534 SCB D-word 2 to SCB D-word 4

   Example:

   In the case of unit n+1, the actual frequency of unit n transferred by means of telegram word 2 is taken:
   → P443.1 = 4502

   If a 32-bit word is to be received, the corresponding parameter must also be suitable for the reception of double words (see parameter list).

   See operating instructions of the basic unit and function diagrams Z05.

NOTE

If the ON/OFF1 command is given via peer-to-peer and switch-off in the case of telegram failure has been parameterized by means of P704 / P687, an OFF2 or OFF3 command must also be parameterized on the terminal strip or the PMU because, otherwise, the unit can no longer be switched off after a telegram failure.

Passing on telegram words

Additional handling of the received telegram words:

Telegram words are always available to the receiving unit and can also be passed on directly to the next unit (P705.x / P689.x, x = Number of the telegram word). The transmission dead time can thus be reduced.

Parameter value P705.x / P689.x	Description
0	Telegram word x is not passed on
1	Telegram word x is passed on

Example (see also diagram on page 4-11):

Unit n+1:

- The received control word in telegram word 1 (Index i001 in P705 / P689) is immediately passed on to the next unit
  → P705.1 / P689.1 = 1
- The received setpoint in telegram word 2 (Index i002 in P705 / P689) is not passed on.
  → P705.2 / P689.2 = 0.

NOTE

If a telegram word is directly passed on by means of P705.x / P689.x = 1, any contradictory information for the same telegram word in P706.x / P690.x is ignored.

Example:

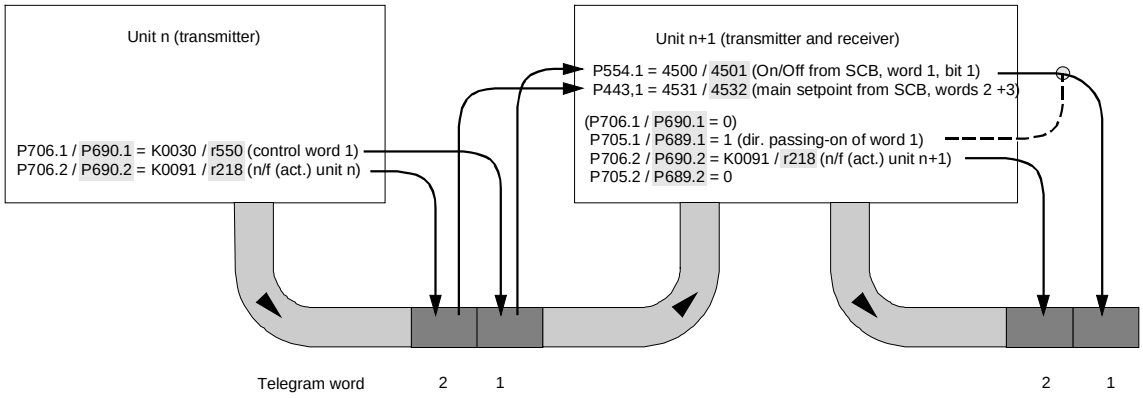

4.3 Significant visualization parameters

r069 / r770 Software version of the board
r697 / r730 SCB diagnosis (see parameter list for basic unit)
r826 / r723 Board code for identifying the board

Indices of parameters r069 / r770, r697 / r730, r826 / r723:

Index x for parameters r069 / r770, r697 / r730, r826 / r723	**Position**
i001	Basic board
i002	Slot A
i003	Slot B
i004	Slot C
i005	Slot D
i006	Slot E
i007	Slot F
i008	Slot G
If a technology board (T100, T300, TSY) or an SCB1 or SCB2 is used in slots 3 or 2, their code is as follows:	
i005	Slot 2
i007	Slot 3

Board configuration

Visualization parameters r826.x / r723 are for displaying the board code. This code can be used to determine the type of electronics board installed.

Board code	**Description**
90 to 109	Mainboard or Control Unit
110 to 119	Sensor Board (SBx)
120 to 129	Serial Communication Board (SCBx)
121	SCB1
122	SCB2
130 to 139	Technology Board
140 to 149	Communication Board (CBx)
150 to 159	Special boards (EBx, SLB)

5 Locating Faults

The fault and alarm messages are described in the operating instructions for the basic unit.

LED display on the boards:

- Continuously lit or continuously dark:
  Error: e.g. no connection to the CU control board or board fault
- Flashing, 0.5 Hz:
  Correct operation

6 Technical Data

Board name	**SCB2 (Serial Communication Board 2)**		
Order No.	6SE7090-0XX84-0BD0		
Rated input voltage	5 V ± 5 %, 580 mA, internal from the converter		
Rated output voltage	5 V ± 5 %, 150 mA, electrically isolated supply for the RS485-interface		
Operating temperature	0 °C to +55 °C (32 °F to 131 °F)		
Storage temperature	–25 °C to +70 °C (–13 °F to 158 °F)		
Transport temperature	–25 °C to +70 °C (–13 °F to 158 °F)		
Environmental conditions – Climate class: – Pollution stress	 3K3 to DIN IEC 721 Part 3-3 / 04.90 3C2 to DIN IEC 721 Part 3-3 / 04.90		
Pollution degree	2 DIN VDE 0110 Part 1/01.89. Moisture condensation not permissible		
Overvoltage class	III DIN VDE 0110 Part 2 / 01.89		
Degree of protection	IP00 DIN VDE 0470 Part / 11.92 ≙ EN 60529		
Mechanical stability	DIN IEC 68-2-6 / 06.90		
	Frequency range Hz	Constant amplitude of deflection mm	 acceleration m/s^2 (g)
• For stationary applications	10 to 60	0.35	
	above 60 to 500		49 (5)
• During transport	5 to 9	3.5	
	above 9 to 500		9.8 (1)

Table 6-1 Technical data

Bisher sind folgende Ausgaben erschienen:

Ausgabe	Interne Sachnummer
AA	477 413 4000 76 J AA-74

Ausgabe AA besteht aus folgenden Kapiteln:

Kapitel		Änderungen	Seitenzahl	Ausgabedatum
1	Definitionen und Warnungen	Erstausgabe	3	10.98
2	Produktbeschreibung	Erstausgabe	1	10.98
3	Einbau	Erstausgabe	2	10.98
4	Anschließen und Inbetriebsetzen	Erstausgabe	12	10.98
5	Fehlersuche	Erstausgabe	1	10.98
6	Technische Daten	Erstausgabe	1	10.98

The following editions have been published so far:

Edition	Internal Item Number
AA	477 413 4000 76 J AA-74

Version AA consists of the following chapters:

Chapter		Changes	Pages	Version date
1	Definitions and Warnings	first edition	3	10.98
2	Product Description	first edition	1	10.98
3	Installation	first edition	2	10.98
4	Connection and Start-up	first edition	12	10.98
5	Locating Faults	first edition	1	10.98
6	Technical Data	first edition	1	10.98

Group: Automation and Drives (A&D)
Division: Variable-Speed Drive Systems
Postfach 3269, D-91050 Erlangen

Siemens Aktiengesellschaft

Subject to change

Order No.: 6SE7087-6CX84-0BD0
Printed in the Federal Republic of Germany
10.98

How to assemble a bus cable

To make connections on a plastic fiber-optic cable, please follow the instructions below:

1. Cut the correct length of fiber-optic cable. Make sure you cut the cable at right angles, use a sharp knife (Fig. 5-4 ①).
2. Remove approximately 7 mm of the outer, black sheath on the cable using a suitable cable stripping device. Take great care not to damage the fiber optic when removing the sheath!
3. Insert the fiber-optic cable into the connector (Fig. 5-4 ②) and push it into the cylindrical sleeve as far as it will go. The transparent fiber optic will protrude out of the other side of the sleeve.
4. Fold round the gripping half of the connector and close it by hand (Fig. 5-4 ③). Once the top half of the connector is latched into the lower half, the cable is lodged securely in the connector.
5. Use a sharp knife to cut the protruding end of the cable almost flush with the connector surface. Cut at right angles to the fiber-optic cable axis.
6. You now need to polish the surface of the fiber optic. To do this, place the end of the sleeve flat on the surface of the matt, rough side of the green polishing paper supplied, and "draw" a figure of 8. Then clean the end with a clean, lint-free cloth.
7. The sleeve end can be polished finely to reduce throughput losses to a minimum. Fine polishing reduces throughput losses by approximately 2 dB. To fine polish the sleeve, place it vertically on the matt, rough side of the pink polishing paper and "draw" a figure of 8 about 25 times. Then clean the end again with a clean, lint-free cloth.

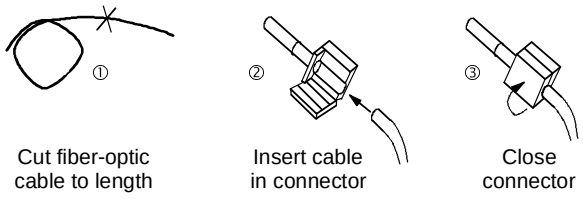

Fig. 5-4 Connecting a plastic cable

SLB – SIMOLINK – Board

Wichtige Ergänzung zur Betriebsanleitung SLB 477 758 4070 76 J AC-74
Kapitel 4.2 Buskabel herstellen:

Kabel anschließen

1. Schneiden Sie die benötigte Länge des Lichtwellenleiters im rechten Winkel zum Kabel ab. Verwenden Sie hierzu ein **scharfes** Messer. Bild 4.2.1
2. Entfernen Sie die äußere schwarze Umhüllung des Lichtleiters mit einer geeigneten Abisolierzange auf einer Länge von ca. 7mm. Der Lichtwellenleiter darf dabei auf keinen Fall beschädigt werden!
3. Lichtwellenleiterkabel in den Stecker einlegen (Bild4.2.2) und bis zum Anschlag in die zylindrische Hülse einschieben. Der durchsichtige Lichtwellenleiter steht dann vorne aus der Hülse heraus.
4. Griffhälfte des Steckers herumklappen und Stecker mit der Hand schließen (Bild 4.2.3). Wenn die obere Griffhälfte in die untere eingerastet ist, ist das Kabel im Stecker fixiert.
5. Den über das Hülsenende hinausstehenden Lichtwellenleiter mit einem **scharfen** Messer nahezu bündig abschneiden. Den Schnitt senkrecht zur Lichtwellenleiterachse führen.
6. Die Schnittfläche des Lichwellenleiters muß nun poliert werden. Dazu führt man das Hülsenende senkrecht in Form einer 8 über die matte rauhe Seite der beigepackten grünen Polierfolie. Abschließend wird das Ende mit einem sauberen fuselfreien Tuch gereinigt.
7. Zur Erzielung einer minimalen Durchgangsdämpfung kann noch eine Feinpolitur erfolgen. Die Feinpolitur verbessert die Übergangsdämpfung um ca. 2dB. Das Hülsenende wird dazu wieder senkrecht in Form einer 8 ca. 25 mal über die rauhe matte Seite der rosa Polierfolie geführt. Abschließend wird das Ende nochmal mit einem sauberen fuselfreien Tuch gereinigt.

Die Bildangaben beziehen sich auf die Betriebsanleitung SIMOVERT MASTERDRIVES SLB – SIMOLINK-Board Bestell-Nr. 477 758 4070 76 J AC-74 im Kapitel 4.2 .

SLB – SIMOLINK Board

Important supplement to the operating instructions SLB 477 758 4070 76 J AC-74
Chapter 4.2 Making the bus cable:

Connecting cables

1. Cut off the required length of fiber optic cable by cutting at right angles to the cable. Use a **sharp** knife for this purpose. Fig. 4.2.1
2. Remove approx. 7 mm in length of the black sheathing from the fiber optic cable with a suitable insulation stripper. Damage to the fiber optic cable must be avoided at all costs!
3. Put the fiber optic cable into the plug-in connector (Fig. 4.2.2) and push it into the cylindrical sleeve as far as as it will go. The transparent fiber optic cable then protrudes from the sleeve.
4. Fold round the gripping halves of the plug-in connector and close it by hand (Fig. 4.2.3). When the top gripping half latches into the lower one, the cable is fixed firmly in the connector.
5. Cut off the fiber optic cable protruding out of the sleeve. Use a **sharp** knife to do this and cut off the cable almost flush. Cut at right angles to the axis of the fiber optic cable.
6. The cut surface of the fiber optic cable must now be polished. To do this, place the end of the sleeve vertically onto the matt rough side of the green polishing foil supplied and "draw" a figure eight. Then clean the end with a clean, fluff-free cloth.
7. In order to achieve minimum throughput loss, the end can then be fine-polished. Fine polishing improves throughput loss by approximately 2 dB. To do this, again place the end of the sleeve vertically onto the matt rough side of the pink polishing foil and "draw" a figure eight about 25 times. Then clean the end again with a clean, fluff-free cloth.

The information in the illustrations relate to the operating instructions for SIMOVERT MASTERDRIVES SLB – SIMOLINK Board Order No. 477 758 4070 76 J AC-74 in Chapter 4.2 .

SIEMENS

SIMOVERT MASTERDRIVES

Betriebsanleitung
Operating Instructions

SLB - SIMOLINK-Board

Ausgabe / Edition: AC

477 758 4070 76 J AC-74

Contents

0 Definitions and Warnings 0-1

1 Description 1-1

2 Technical Data 2-1

3 Installation 3-1

4 Connecting-up 4-1

4.1 Connecting SIMOLINK 4-1
4.2 Forming the bus cable 4-3
4.3 External voltage supply 4-4

5 Displays 5-1

6 Start-up 6-1

0 Definitions and Warnings

Qualified personnel

For the purpose of this documentation and the product warning labels, a "Qualified person" is someone who is familiar with the installation, mounting, start-up, operation and maintenance of the product. He or she must have the following qualifications:

- Trained or authorized to energize, de-energize, ground and tag circuits and equipment in accordance with established safety procedures .
- Trained or authorized in the proper care and use of protective equipment in accordance with established safety procedures.
- Trained in rendering first aid.



DANGER

For the purpose of this documentation and the product warning labels, "Danger" indicates death, severe personal injury or substantial property damage will result if proper precautions are not taken.



WARNING

For the purpose of this documentation and the product warning labels, "Warning" indicates death, severe personal injury or property damage can result if proper precautions are not taken .



CAUTION

For the purpose of this documentation and the product warning labels, "Caution" indicates that minor personal injury or material damage can result if proper precautions are not taken.

NOTE

For the purpose of this documentation, "Note" indicates important information about the product or about the respective part of the documentation which is essential to highlight.



WARNING

- Hazardous voltages are present in this electrical equipment during operation.
- Non-observance of the warnings can thus result in severe personal injury or property damage.
- Only qualified personnel should work on or around the equipment
- This personnel must be thoroughly familiar with all warning and maintenance procedures contained in this documentation.
- The successful and safe operation of this equipment is dependent on correct transport, proper storage and installation as well as careful operation and maintenance.



CAUTION

Components which can be destroyed by electrostatic discharge (ESD)

The board contains components which can be destroyed by electrostatic discharge. These components can be easily destroyed if not carefully handled. If you have to handle electronic boards, please observe the following:

- Electronic boards should only be touched when absolutely necessary .
- The human body must be electrically discharged before touching an electronic board.
- Boards must not come into contact with highly insulating materials - e.g. plastic parts, insulated desktops, articles of clothing manufactured from man-made fibers.
- Boards must only be placed on conductive surfaces .
- Boards and components should only be stored and transported in conductive packaging (e.g. metalized plastic boxes or metal containers).
- If the packing material is not conductive, the boards must be wrapped with a conductive packaging material, e.g. conductive foam rubber or household aluminium foil.

The necessary ESD protective measures are clearly shown in the following diagram:

- a = Conductive floor surface
- b = ESD table
- c = ESD shoes
- d = ESD overall
- e = ESD chain
- f = Cubicle ground connection

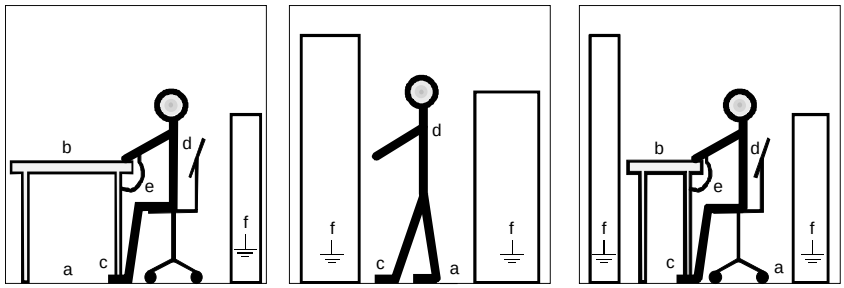

Fig. 0-1 ESD protective measures

1 Description

The SLB optional board (SIMOLINK board) is used for connecting up drives to SIMOLINK.

Each SLB optional board is a node on SIMOLINK. The maximum number of nodes is restricted to 201.

The SIMOLINK drive link is used for the fast transfer of data between various drives and for the synchronization of these drives to a common system clock. It is based on a closed ring in which all nodes are interlinked.

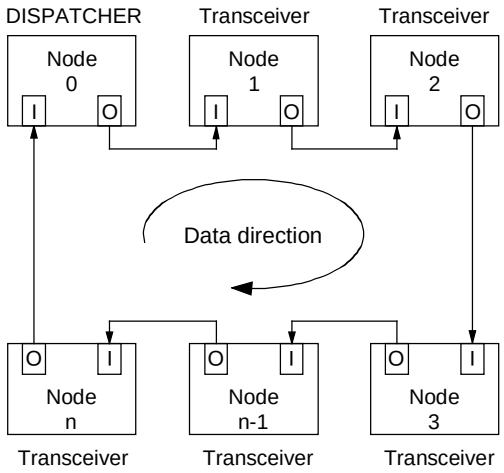

Fig. 1-1 Bus ring structure

Data is transferred between the individual nodes via fiber-optic cables. Plastic or glass-fiber cables can be used as a transfer medium.

The SLB optional board has a 24 V voltage input for the external voltage supply of the board. This ensures that data transfer in SIMOLINK is maintained even with powered-down converter/inverter.

The optional board is provided with three LED displays for supplying information on the current operating status.

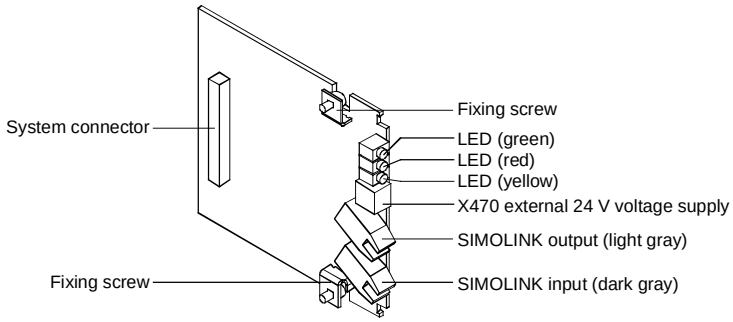

Fig. 1-2 View of the SLB optional board

Mode of operation

The SLB optional board links the converters/inverters to SIMOLINK. It can be used as the SIMOLINK dispatcher or as a SIMOLINK transceiver. The functionality can be changed over by means of parameterization.

Data traffic

The optional board reads all telegrams on SIMOLINK and stores the selected telegrams in a receive memory. There is also a separate memory area for the telegrams which have to be changed or re-generated.

Telegram access

The stored telegrams are archived in double-word connectors. A dedicated connector is available for each of the eight stored telegrams. The output telegrams are archived in BICO parameters.

Voltage supply

The optional board can be supplied with the required operating voltage internally from the converter/inverter, as well as externally. Priority is given to the external voltage supply. Changeover is effected automatically on the optional board.

NOTE

It is not permissible to change over from external voltage supply during bus operation. During automatic changeover of the voltage supply, a reset signal is generated on the optional board which results in the loss of some telegrams.

2 Technical Data

Order number	6SE7090-0XX84-0FJ0
Size (length x width)	90 mm x 83 mm
Degree of pollution	Pollution degree 2 according to IEC 644-1(DIN VDE 0110/T1, moisture condensation is not permissible in operation
Mechanical strength During stationary duty - Deflection - Acceleration During transport - Deflection - Acceleration	According to DIN IEC 68-2-6 (for correctly installed board) 0.15 mm in frequency range 10 Hz to 58 Hz 19.6 m/s² in frequency range > 58 Hz to 500 Hz 3.5 mm in frequency range 5 Hz to 9 Hz 9.8 m/s² in frequency range > 9 Hz to 500 Hz
Climate class	Class 3K3 according to DIN IEC 721-3-3 (in operation)
Type of cooling	Natural-air cooling
Permissible ambient or coolant temperature - During operation - During storage - During transport	 0° C to +70° C (32° F to 158° F) -25° C to +70° C (-13° F to 158° F) -25° C to +70° C (-13° F to 158° F)

Permissible humidity rating	Relative air humidity ≤ 95 % during transport and storage ≤ 85 % in operation (moisture condensation not permissible)
Power supply	• DC 5 V, max. 600 mA, internally from the basic unit • DC 24 V, max. 200 mA, external voltage supply
Transfer rate	11 MBaud
Duration delay	max. 3 clock times
Cable length (max.) between two nodes	- 40 m (plastic) - 300 m (glass fiber)

Table 2-1 Technical Data

3 Installation

If the inverters/converters are ordered with optional functions, the optional boards are already installed in the units when they are delivered.

It is possible to retrofit optional boards and this can be carried out by the user.

For this purpose, there are either three or up to six slots on the basic unit depending on the type of construction for mounting the optional boards.

An exact description of installation is included with the relevant basic unit. As the unit has to be removed and opened in order to install optional boards, attention must be paid to the ESD measures. Please refer to the operating instructions of the basic unit in this regard.

NOTE Generally, you can install the SLB (SIMOLINK) optional board in any slot, but you must take into account that a sensor board always requires slot C.

4 Connecting-up

The SLB optional board is provided with

- two connections for SIMOLINK and
- one connection for the external voltage supply

4.1 Connecting SIMOLINK

Connecting SIMOLINK

Two connections for the fiber-optic cables are available for SIMOLINK, one input and one output respectively.

You must always connect SIMOLINK up to both connections.



CAUTION

If you confuse the two connections for signal input and signal output, SIMOLINK cannot operate.

SIMOLINK connection

SIMOLINK is provided with its own input and its own output connection.

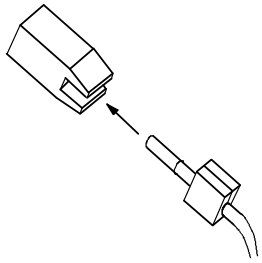

Fig. 4-1 Bus connection

Position and color of the connections

The SIMOLINK input is located in the lower area of the optional board. It is dark gray.

The SIMOLINK output is located above the SIMOLINK input. It is light gray.

4.2 Forming the bus cable

Fiber-optic cables

Plastic fiber-optic cables are used for connecting the optional board to SIMOLINK.

The distance between two nodes is permitted to be up to 40 m. The total length of the ring bus is permitted to be up to 1000 m.

Connecting the cable

Proceed as follows to connect up the fiber-optic cable:

- Cut off the required length of fiber-optic cable at a right-angle to the cable using a sharp knife.
- Insert the cable into the connector.
- Close the connector until the connector lock snaps into place.

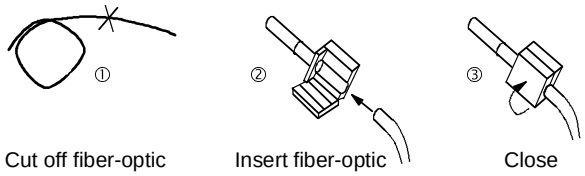

Cut off fiber-optic cable | Insert fiber-optic cable into connector | Close connector

Fig. 4-2 Connecting the cable

4.3 External voltage supply

X470 - External voltage supply

The SLB optional board is provided with connection X470 for the external voltage supply of the optional board. The external voltage supply is available in addition to the internal voltage supply through the converter/inverter.

If you wish the converter/inverter in which the SLB optional board is installed to be disconnected from the supply voltage irrespective of any other units connected to SIMOLINK, you have to use the external voltage supply.

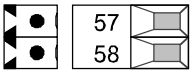

Terminal	Designation	Significance	Range
57	M	Ground	0 V
58	P24 V	External voltage supply	DC 18 - 33 V, 200 mA

Connectable cross-section: 1.5 mm² (AWG 16)

Terminal 57 is at the top when installed.

Table 4-1 Terminal assignment at connection X470

NOTE

The SIMOLINK bus system can only function if all the nodes are operating.This requires that all nodes are always connected to a voltage supply. If one of the nodes on SIMOLINK is not operating, SIMOLINK is interrupted.

5 Displays

Three LED displays are provided on the front side of the SLB optional board which give information on the current operating status. These are as follows:

- SIMOLINK operating (green)
- Board operating (red)
- Data exchange with the basic unit (yellow)

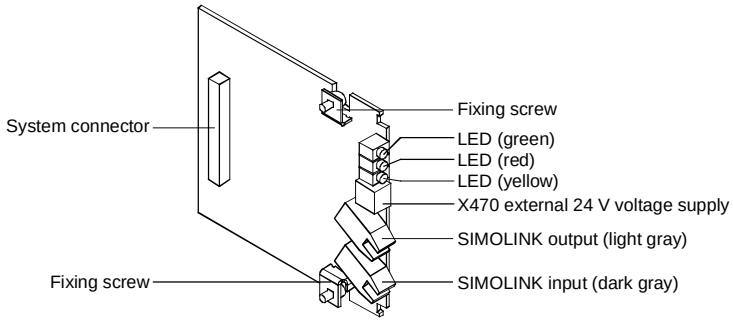

Fig. 5-1 SLB displays

Operating display

LED	Status	Diagnostic information
Green	Flashing	Fault-free net data transfer via SIMOLINK
Red	Flashing	SLB operating
Yellow	Flashing	Data exchange with basic unit is okay

Table 5-1 SLB operating display

Fault display

LED	Status	Diagnostic information
Green	off/on	No net data exchange possible via SIMOLINK; bus cable is not connected or is defective
Red	off/on	Voltage supply for SLB cut off; replace SLB or basic unit
Yellow	off/on	No data exchange with the basic unit; bus cable is not connected or is defective; replace SLB or basic unit

Table 5-2 SLB fault display

6 Start-up

After installation of the SLB optional board has been completed, an automatic self-test is carried out when the basic unit (converter/inverter) is powered up.

After this, the new board in the basic unit must be provided with a bus address. Please refer to the documentation on the basic unit for further details.

NOTE Please refer to the documentation of the respective basic unit regarding instructions for the quick method of parameterization.

Bisher sind folgende Ausgaben erschienen:
The following editions have been published so far:

Ausgabe Edition	Interne Sachnummer Internal Item Number
AA	477 758 4070 76 J AA-74
AB	477 758 4070 76 J AB-74
AC	477 758 4070 76 J AC-74

Ausgabe AC besteht aus folgenden Kapiteln:
Version AC consists of the following chapters:

	Kapitel	Chapter	Seitenzahl Pages	Ausgabedatum Version date
0	Definitionen und Warnungen	Definitions and warnings	4	06.98
1	Beschreibung	Description	4	06.98
2	Technische Daten	Technical Data	2	06.98
3	Montage	Installation	1	06.98
4	Anschließen	Connecting-up	4	06.98
5	Anzeigen	Displays	2	06.98
6	Inbetriebsetzung	Start-up	1	06.98

Group: Automation and Drives (A&D)
Division: Variable-Speed Drive Systems
Postfach 3269, D-91050 Erlangen

Siemens Aktiengesellschaft

Subject to change

Printed in the federal Republic of Germany
06.98

SIEMENS

SIMOVERT MASTER DRIVES

Betriebsanleitung
Operating Instructions

Safe Stop Board
SSB

Seite
Page

Deutsch 3

English 15

Français 27

Español 39

Italiano 51

Ausgabe / Edition: AA

Bestell-Nr. / Order-No.: 6SE7080-0AX87-1JB0

Contents

0 **Definitions** 16

1 **Description** 18

2 **Connecting-up** 19

3 **Technical Data** 22

4 **Installing the „SSB“ board** 23

0 Definitions

- QUALIFIED PERSONAL

  For the purpose of these Operating Instructions and product labels, a "Qualified person" is someone who is familiar with the installation, mounting, start-up and operation of the equipment and the hazards involved. He or she must have the following qualifications:

  1. Trained and authorized to energize, de-energize, clear, ground and tag circuits and equipment in accordance with established safety procedures.
  2. Trained in the proper care and use of protective equipment in accordance with established safety procedures.
  3. Trained in rendering first aid.

- DANGER

  For the purpose of these Operating Instructions and product labels, "Danger" indicates death, severe personal injury or substantial property damage will result if proper precautions are not taken.

- WARNING

  For the purpose of these Operating Instructions and product labels, "Warning" indicates death, severe personal injury or property damage can result if proper precautions are not taken.

- CAUTION

  For the purpose of these Operating Instructions and product labels, "Caution" indicates that minor personal injury or material damage can result if proper precautions are not taken.

- NOTE

  For the purpose of these Operating Instructions, "Note" indicates information about the product or the respective part of the Operating Instructions which is essential to highlight.

NOTE
These Operating Instructions do not purport to cover all details or variations in equipment, nor to provide for every possible contingency to be met in connection with installation, operation or maintenance. Should further information be desired or should particular problems arise which are not covered sufficiently for the purchaser's purposes, the matter should be referred to the local Siemens sales office. The contents of this Instruction Manual shall not become part of or modify any prior or existing agreement, committment or relationship. The sales contract contains the entire obligation of Siemens. The warranty contained in the contract between the parties is the sole warranty of Siemens. Any statements contained herein do not create new warranties or modify the existing warranty.

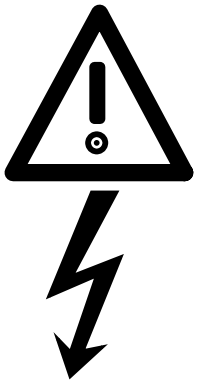

WARNING

Hazardous voltages are present in this electrical equipment during operation.

Non-observance of the safety instructions can result in severe personal injury or property damage.

Only qualified personnel should work on or around the equipment after first becoming thoroughly familiar with all warning and safety notices and maintenance procedures contained herein.

The successful and safe operation of this equipment is dependent on proper handling, installation, operation and maintenance.

1 Description

The SSB board is designed for SIMOVERT MASTER DRIVES, types ≥ E.

The SSB board ensures that the SIMOVERT MASTER DRIVES converter does not generate a rotating field in the connected motor. To realize this, a safety relay on the SSB board switches-out the power supply of the coupling elements (optocoupler, fiber-optic cable) between the control electronics and power section.

If the power supply is shutdown via the safety relay, the power section can no longer power the connected motor, even if the control electronics (microprocessor) outputs firing commands. In this status, the drive is in a „safety off“ condition, even if there is no electrical isolation between the motor and SIMOVERT MASTER DRIVES and without any electrical isolation between SIMOVERT MASTER DRIVES and the line supply.

The safety relay has two contacts, an NO and an NC contact, which are mechanically connected so that the NC and NO contacts cannot be simultaneously closed, even when a faulty condition develops (e.g. when the contacts are welded together). The NO contact connects the coupling elements with the power supply and the NC contact is used to output a checkback signal. For example, this signal can be used to control a signal lamp which indicates the „safety off“ status.

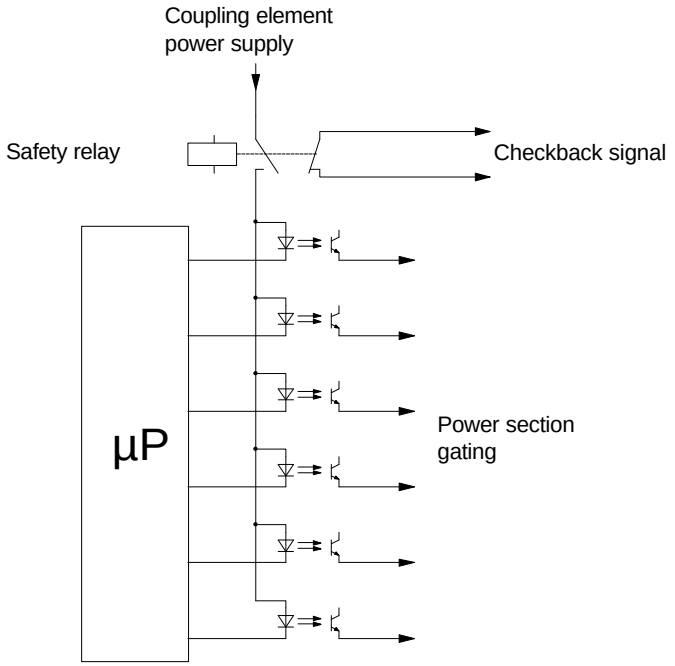

Fig. 1.1 Integrating the safety relay into the SIMOVERT MASTER DRIVES gating circuitry to implement the „safety off“ function

NOTE
In the „safety off“ status, the SSB board prevents the motor accidentally rotating. **However, even in the „safety off“ status, the motor terminals are at a hazardous potential!** The SSB board is not suitable to decelerate a motor as quickly as possible down to standstill. When the gating signals are disabled, the motor is only braked by the connected load! The motor should be decelerated down to standstill using SIMOVERT MASTER DRIVES and then be brought into the „safety off“ status using the SSB board. Mechanical work can then be carried-out on the drive, when the line supply voltage is still connected and there is no electrical isolation between the motor and SIMOVERT MASTER DRIVES.

2 Connecting-up

The safety relay on the SSB board is energized via connector X533. The position of connector X533 for the various SIMOVERT MASTER DRIVES types can be taken from the following diagrams.

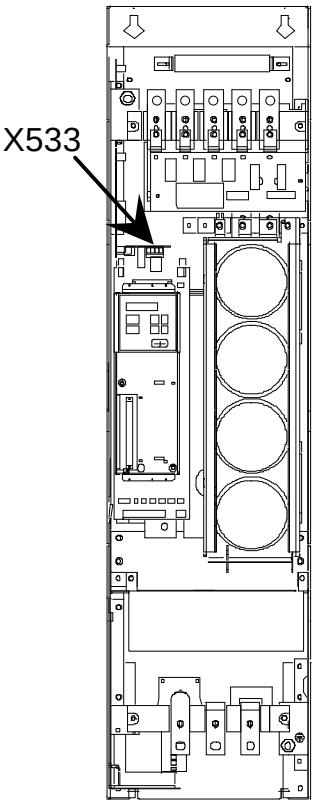

Fig. 2.1 Types E and F

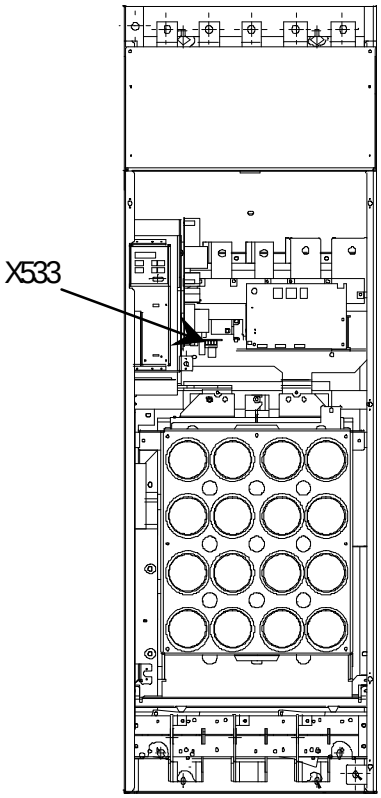

Fig. 2.2 Types G and H

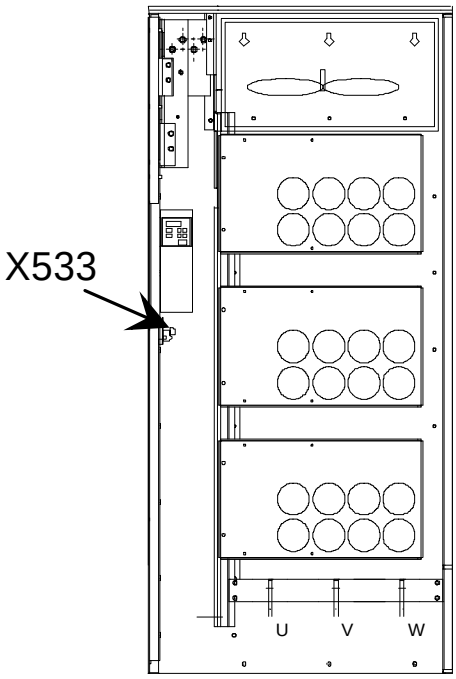

For parallel units, type M (double parallel circuit configuration consisting of master and slave), the SSB board is only mounted in the master.

Multi-parallel units (consisting of a master and several slaves), require an SSB board in the master and in each slave.

Fig. 2.3 Types ³ J

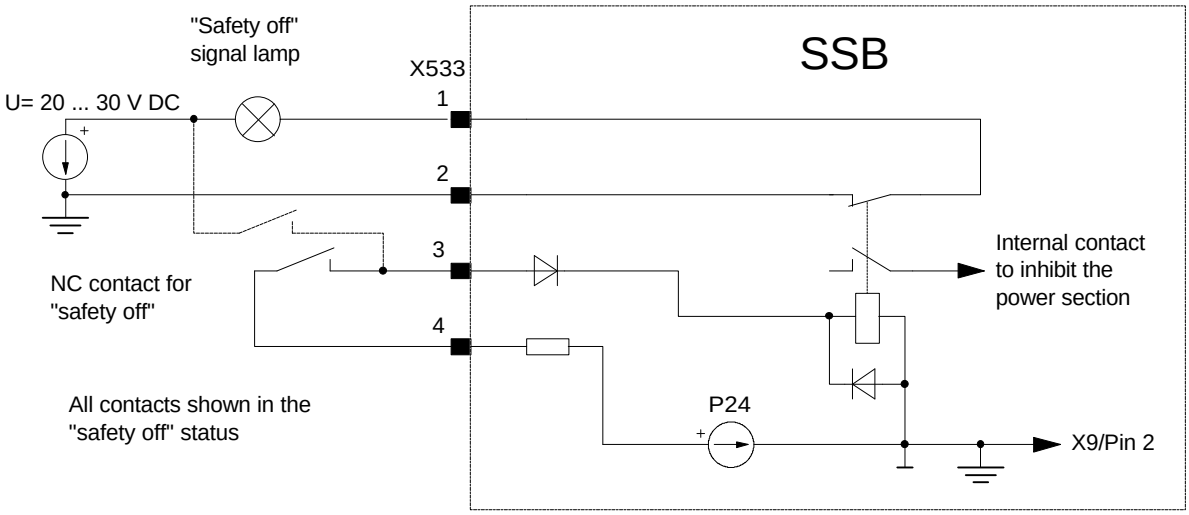

Fig. 2.4 „SSB“ board wiring (basic circuit principle)

In the basic configuration, the internal P24 power supply supplies the safety relay coil. To realize this, an NC contact or several NC contacts connected in series are connected between pins 3 and 4 of connector X533. When an NC contact is actuated, the safety relay drops-out and the SIMOVERT MASTER DRIVES is then in the „safety off“ status. For example, a signal lamp, connected at the safety relay, terminal 1 and 2, indicates this status. Refer to Section 3 for the contact load capability. The internal P24 power supply has a current limiting function and is only suitable to supply the safety relay. The power supply of the signal lamp(s) should be grounded so that no inadmissably high voltage differences can occur between pins of connector X533 and on SSB board.

The safety relay can also be energized via an external 20 ... 30 V DC power supply. This is shown as dotted lines in Fig. 2.4. The grounded chassis potential of board SSB is accessible via connector X9 (terminal 2).

NOTE

In order that SIMOVERT MASTER DRIVES can power-up the motor when an SSB board is installed, a jumper should be inserted between pins 3 and 4 of connector X533 on the SSB board, or external circuitry according to Fig. 2.4 should be connected.

If there is neither a jumper between terminal 3 and 4, nor appropriate external circuitry, the control electronics of SIMOVERT MASTER DRIVES tracks the entered setpoints (e.g. output frequency), however, the motor does not rotate. Various fault messages can be displayed corresponding to the control type selected. If a fault messsage F025 ... F027 is displayed, then this can only be reset after a 30 s delay time.

3 Technical Data

Max. switching capability X533 pins 1/2	30 V DC / 2 A
Supply voltage X533 pin 3	20 ... 30 V DC
Current drain X533 pin 3	< 20 mA @ 24 V DC
Cross-section	0.2 ... 2.5 mm^2 AWG 24 ... 12

Table 3.1

NOTE
The „safety off“ function supports the safety regulations required within the scope of a machine or plant regarding the protection categories to prevent potentially hazardous motions of the machine or plant. The monitoring- and control functions to fulfill the safety regulations must be observed and guaranteed by the mechanical design and the control itself.

4 Installing the „SSB“ board

♦ **Installing types E ... H**

The „SSB“ board is inserted at connector X258 of the power supply. The ribbon cable to the electronics box should now be connected at connector X538 on the „SSB“. The mounting position of the power supply can be taken from Fig. 2.1 or Fig. 2.2.

For type E, the DC link battery can be removed so that it is easier to access connector X258 of the power supply.

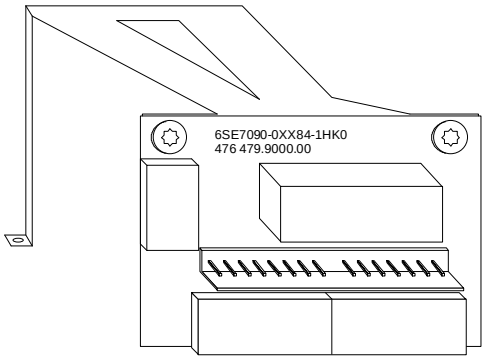

Fig. 4.1

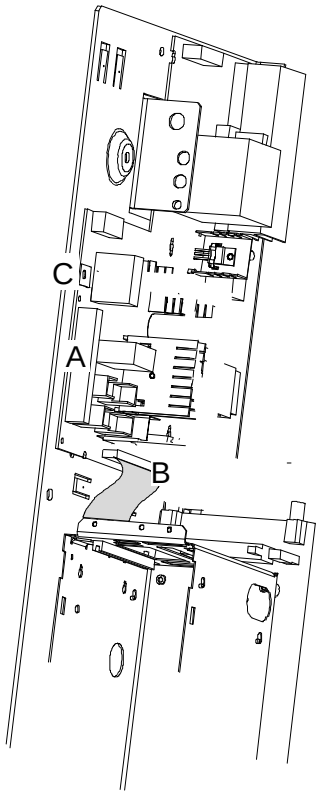

Fig. 4.2

1.

Bolt the mounting bracket to "SSB"

2.

Power-down SIMOVERT MASTER DRIVES!

For 230 V AC DC units
do not forget the fan power supply
check that the DC link is discharged!

A) Remove socket connector X18

B) Remove the ribbon cable from connector X258

C) Remove the bolt at X1

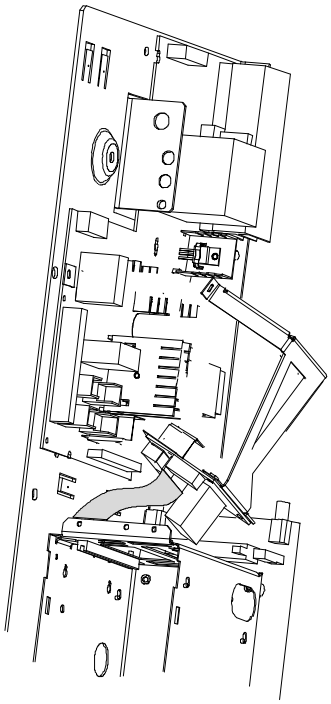

Fig. 4.3

3.

Insert the ribbon cable at connector X538 of the „SSB“

Note:

The ribbon cable has a coding pin (pin 9) and can only be inserted in the correct position in the connector.

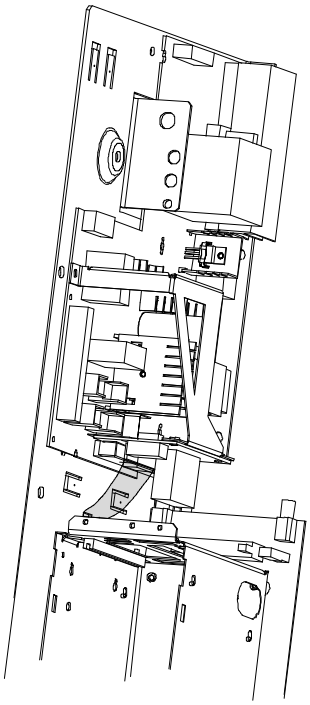

Fig. 4.4

4.

Insert „SSB“ at connector X258 and tighten-up the mounting bracket at X1.
Re-insert socket connector X18

Caution:

Do not remove the insulation foil on the solder side of the „SSB“! It is used to insulate the line supply voltage which is available at fuse F1 of the power supply.

♦ **Mounting types ≥ J**

The "SSB" board is inserted at connector X258 of the power supply. The ribbon cable to the electronics box is now connected at connector X538 on the "SSB". The mounting position of the power supply can be seen from Fig. 2.3.

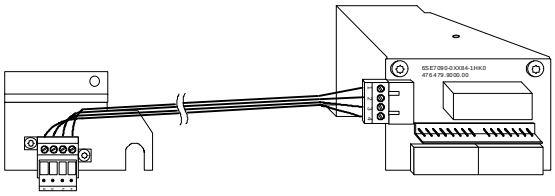

Fig. 4.5

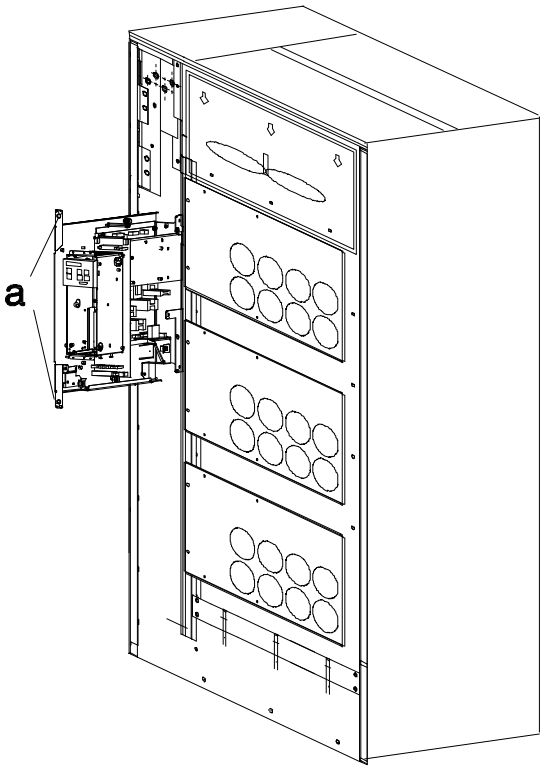

Fig. 4.6

1.

Bolt the mounting bracket to the „SSB“.

Insert the cable

2.

Power-down the SIMOVERT MASTER DRIVES!

Do not forget the 230 V AC fan power supply. Check that the DC link is discharged!

Remove the electronics module by releasing the two bolts a).

Caution:

Do not withdraw the electronics module too far! Do not subject the connector cables to any stressing! The electronics module must not be drawn out so far that it will fall!

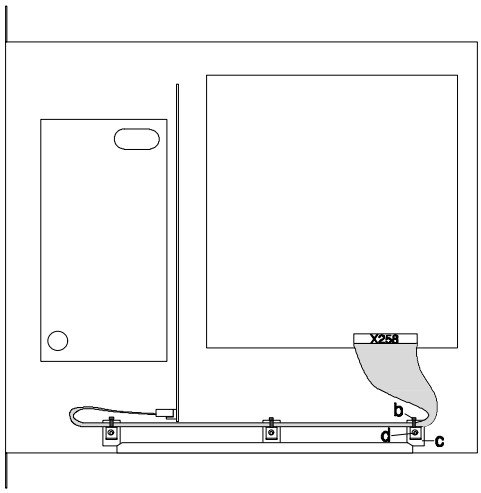

Fig. 4.7

3.

In the electronics module, remove cable tie (b) and remove cable holder (c) by releaseing screw (d)

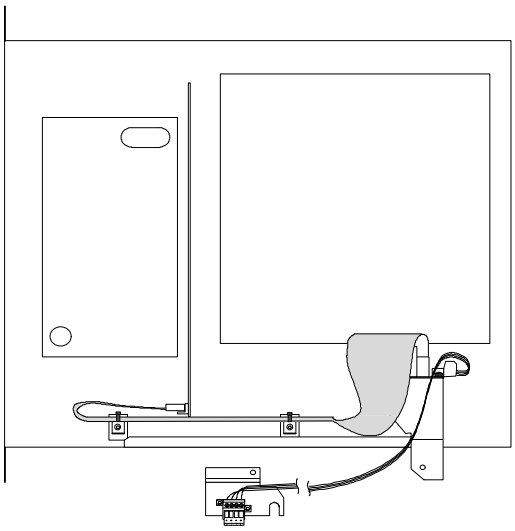

Fig. 4.8

4.

Remove the ribbon cable from X258 of the power supply and insert at connector X538 of the "SSB".

Note:

The ribbon cable has a coding pin (pin 9) and can only be inserted in the correct position in the connector.

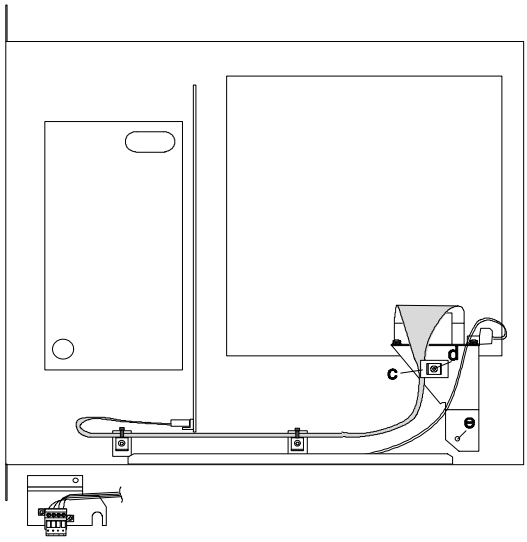

Fig. 4.9

5.

Insert the "SSB" at connector X258 and retain the mounting bracket with screw (e).

Mount the cable holder (c) with screw (d) at the mounting bracket

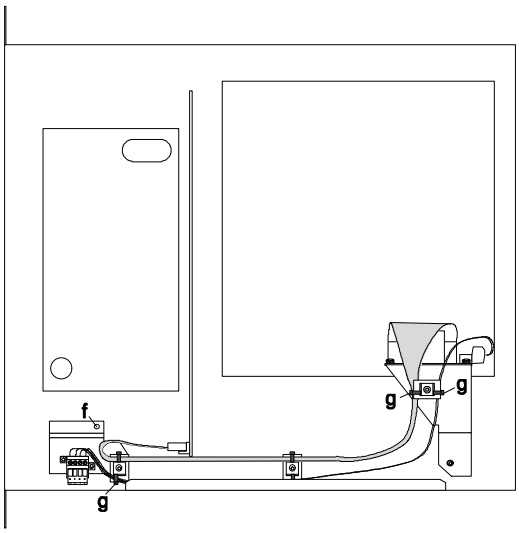

Fig. 4.10

6.

Insert the mounting plate of connector X533. The recess in the mounting plate encompasses the threaded bushing of the front cable holder. Retain the mounting plate with screw (f). Retain the cable using cable ties (g).

SIEMENS

SIMOVERT Master Drives
T100 Technology Board

Operating Instructions
Hardware

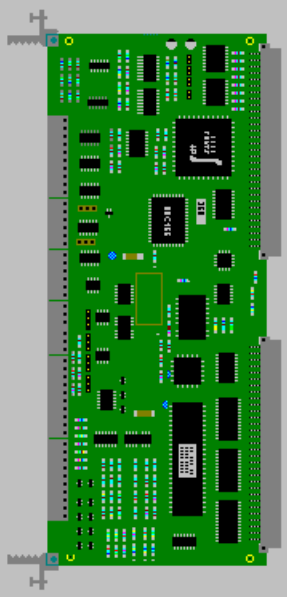

Edition: **D**

Order No.: 6SE7080-0CX87-0BB0

The reproduction, transmission or use of this document or its contents is not permitted without express written authority. Offenders will be liable for damages. All rights, including rights created by patent grant or registration of a utility model or design, are reserved.

We have checked the contents of this document to ensure that they coincide with the described hardware and software. However, differences cannot be completely excluded, so that we do not accept any guarantee for complete conformance. However, the information in this document is regularly checked and necessary corrections will be included in subsequent editions. We are grateful for any recommendations for improvement.

SIMOVERT ® Registered Trade Mark

© Siemens AG 1995 All rights reserved

ENGLISH

Contents

		Page
0	**Definitions**	0-4
1	**Description**	1-1
1.1	Applications	1-1
1.2	Mode of operation and diagnosis LEDs	1-1
2	**Transport, Unpacking, Installation**	2-1
2.1	Transport, unpacking	2-1
2.2	Installation	2-1
3	**Connections**	3-1
3.1	Plug-in terminals for control terminal strip	3-1
3.2	Connection of control cables	3-1
3.3	Terminals	3-3
3.4	Adjusting elements on technology board	3-5
4	**Start-up**	4-1
5	**Replacement of Boards**	5-1
6	**Technical Data**	6-1
6.1	Applicable standards	6-2
6.2	Manufacturer's declaration	6-3

0 Definitions

- QUALIFIED PERSONNEL

  For the purpose of these instructions and the product labels, a "Qualified person" is someone who is familiar with the installation, mounting, start-up and operation of the equipment and the hazards involved. He or she must have the following qualifications:

  1. Trained and authorized to energize, de-energize, clear, ground and tag circuits and equipment in accordance with established safety procedures.
  2. Trained in the proper care and use of protective equipment in accordance with established safety procedures.
  3. Trained in rendering first aid.

- DANGER

  For the purpose of these instructions and the product labels, "Danger" indicates, death, severe personal injury or substantial property damage will result if proper precautions are not taken.

- WARNING

  For the purpose of these instructions and the product labels, "Warning" indicates that death, severe personal injury or property damage can result if proper precautions are not taken.

- CAUTION

  For the purpose of these instructions and the product labels, "Caution" indicates that minor personal injury or material damage can result if proper precautions are not taken.

- NOTE

  For the purpose of these instructions, "Note" indicates information about the product or the respective part of the Instruction Manual to which special attention should be paid.

NOTE
These instructions do not purport to cover all details or variations in equipment, nor to provide for every possible contingency to be met in connection with installation, operation or maintenance. Should further information be desired or should particular problems arise which are not covered sufficiently for the purchaser’s purposes, the matter should be referred to the local Siemens sales office. The contents of this Instruction Manual shall not become part of or modify any prior or existing agreement, commitment or relationship. The sales contract contains the entire obligation of Siemens. The warranty contained in the contract between the parties is the sole warranty of Siemens. Any statements contained herein do not create new warranties or modify the existing warranty.



CAUTION

Components which can be destroyed by electrostatic discharge (ESD)

The board contains components which can be destroyed by electrostatic discharge. These components can be easily destroyed if not carefully handled. If you have to handle electronic boards, please observe the following:

- Electronic boards should only be touched when absolutely necessary.
- You must ensure that your own body has been discharged before you touch a board (the best way to do this is to touch an earthed, conductive object such as a socket-outlet earth contact).
- Boards must not come into contact with highly insulating materials – e.g. plastic foils, insulated desktops, articles of clothing made from man-made fibres.
- Boards may only be placed on surfaces which are conductive.
- When soldering, the soldering iron tip must be grounded.
- Boards and components should only be stored and transported in conductive packaging (e.g. metalized plastic boxes, metal containers).
- If the packing material is not conductive, the boards must be wrapped in a conductive packaging material, e.g. conductive foam rubber or household aluminium foil.

The necessary ESD protective measures are illustrated again below:

a	=	Conductive floor surface	d	=	ESD overall
b	=	ESD table	e	=	ESD chain
c	=	ESD footwear	f	=	Cubicle ground connection

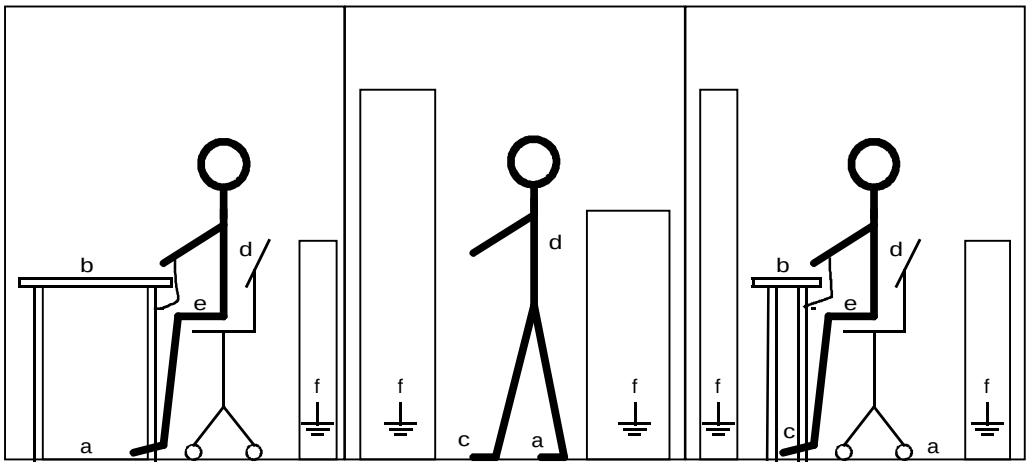

Sitting position **Standing position** **Standing / Sitting position**

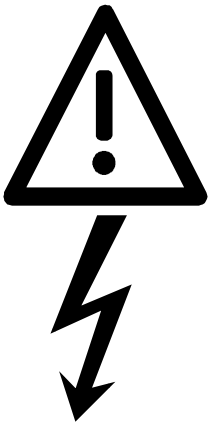

WARNING

Hazardous voltages are present in this electrical equipment during operation.

Owing to the DC link capacitors in the connected SIMOVERT Master Drives, the unit remains at a hazardous potential for up to 5 minutes after it has been disconnected (power connection and electronics power supply). For this reason, wait at least 5 minutes before opening the unit after it has been switched off.

Failure to observe these safety instructions can result in death, severe personal injury or substantial property damage.

Only qualified personnel should work on or around the equipment after first becoming thoroughly familiar with all warnings and maintenance procedures contained in these Instructions.

The successful and safe operation of this equipment is dependent on proper handling, storage, installation, operation and maintenance.

1 Description

1.1 Applications

The T100 technology board (order number 6SE7090-0XX87-0BB0) is a supplementary board in the SIMOVERT Master Drives 6SE70 series. It performs various process-related functions depending on the installed software module. The T100 is inserted in slot 2 (far right) of the electronics box of Master Drives converters FC ,VC, SC or of an infeed/regenerative feedback unit (see Chapter 2.2). Backplane bus adapter (LBA - Local Bus Adapter) is required to install the T100 and must be ordered separately under Order No. 6SE7090-0XX84-4HA0.

A software module, which must be ordered separately, is also required to operate the T100. This module is a 40-pin EPROM module which must be mounted according to the instructions in Chapter 2.2. In addition to the T100, a communications board (e.g. CB1, SCB1 or SCB2) can be inserted in slot 3 of the electronics box. This board does not require any additional LBA backplane bus adapter. All relevant signals and parameters of both the technology board and the basic converter can be accessed via the communications board. The access mechanism and the unit reactions of the T100 via all serial interfaces are identical to those of the SIMOVERT Master Drives basic converter.

The T100 has 8 binary inputs, 5 binary outputs, 5 analog inputs, 2 analog outputs as well as two RS 485 interfaces. External signals are connected via screw-type plug-in terminals X130 to X136 on the front plate of the T100 (see Chapter 3).

The first available software module MS100 "Multi-Purpose Drive" (Order No: 6SE7098-0CX84-0BB0) extends the basic converter functionality by a large number of drive-related, technological functions such as:

- Higher-level PID controller
- Comfort ramp-function generator
- Comfort motorized potentiometer
- Wobble generator
- 2 serial interfaces

The "Multi-Purpose Drive" software module is described in detail in the "Manual for Software Module MS100 "Multi-Purpose Drive" (Order No. for English version: 6SE7087-6CX84-0BB0).

Other software modules can be found in the appropriate catalog.

1.2 Mode of operation and diagnosis LEDs

The T100 has a high-speed 16-bit processor with its own parameter memory. The T100 is parameterized via the basic converter, i.e. by means of the parameterizing unit PMU, the optional operator control unit OP1 or via a PC with the SIMOVIS service program.

The T100 has three diagnosis LEDs which display the following operational states (see Fig. 3.2):

- Red LED flashing (3Hz): T100 is working fault-free in cyclic operation
- Yellow LED flashing (3Hz): Data exchange between T100 and basic converter OK
- Green LED flashing (3Hz): Data exchange between T100 and communications board OK

The T100 is supplied with power via the backplane bus adapter in the electronics box.

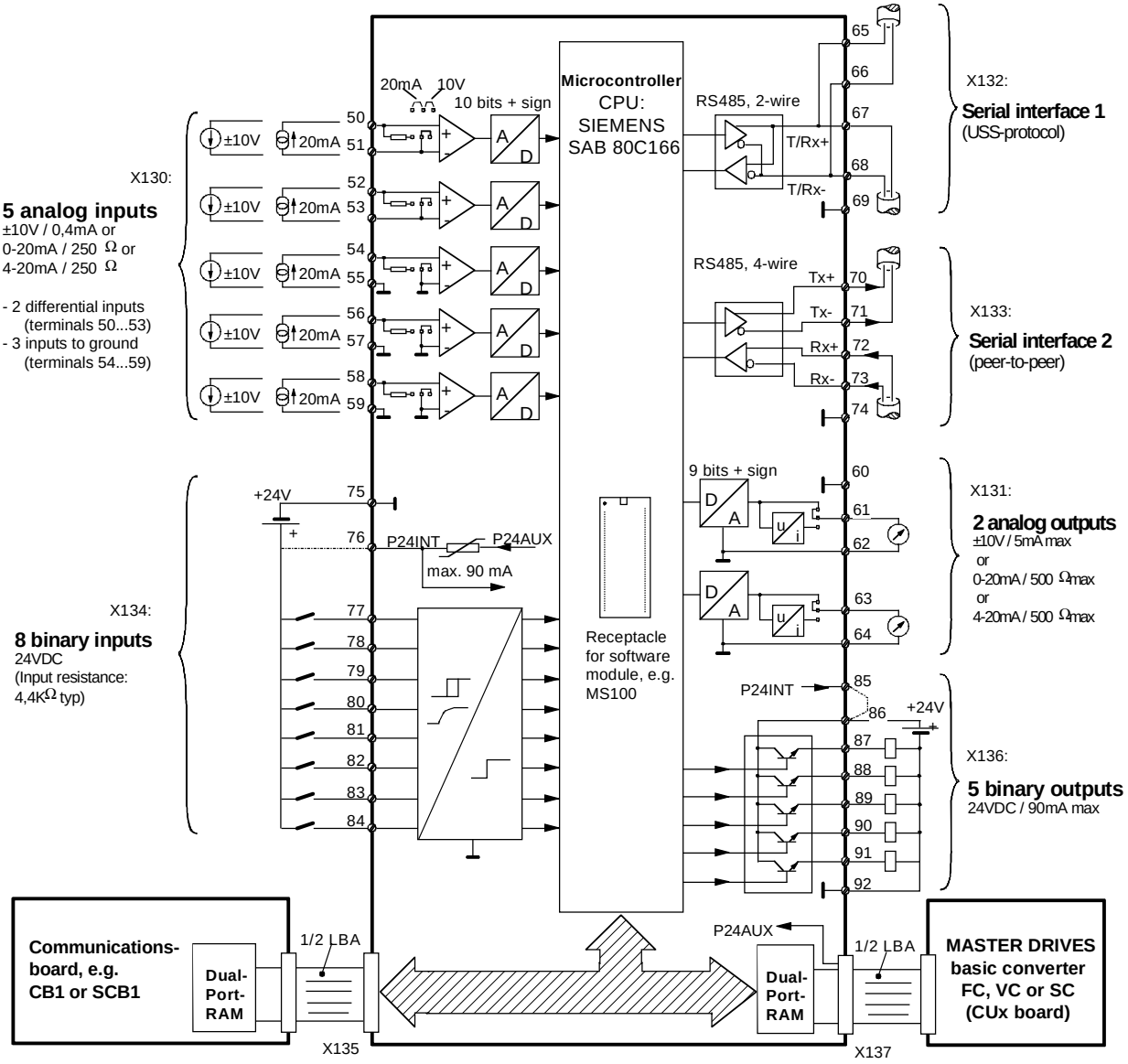

Fig. 1.1 Connection diagram for T100 technology board

2 Transport, Unpacking, Installation

2.1 Transport, unpacking

T100 technology boards are packed in the manufacturing plant in accordance with the data on the order. A product packing label is provided on the box.

Vibration and jolts must be avoided during transport, e.g. when setting the unit down.

Please observe the instructions on the packaging for transport, storage and proper handling.

The board can be installed after it has been unpacked and checked to ensure that the consignment is complete and that the board and software module are undamaged.

The packaging comprises board and corrugated paper. It can be disposed of according to the appropriate local regulations for cardboard products.

If you discover any damage, please contact your shipping agent immediately.

The boards must be stored in clean, dry rooms at temperatures of between – 25 °C (–13 °F) and +70 °C (158 °F). Temperature fluctuations of > 20 K per hour are not permissible.

2.2 Installation



WARNING

Supplementary boards can be guaranteed to operate safely and reliably only if they are installed and commissioned by qualified personnel according to the warnings given in these Instructions.

In particular, the general and national erection and safety regulations governing work on high-power installations (e.g. VDE) and regarding the correct use of tools and personal protective gear must be observed.

The boards must be installed in accordance with local guidelines and standards.

Failure to observe this warning can result in death, severe personal injury or substantial property damage.

The board must be protected against the ingress of foreign bodies or else correct functioning and operational safety cannot be guaranteed.

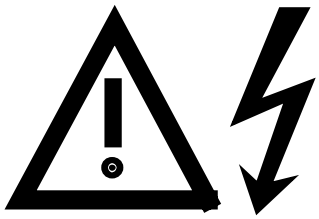

WARNING

Boards may only be replaced by qualified personnel.

Boards must not be removed or inserted when the power supply is connected.

Failure to observe this warning can result in death, severe personal injury or substantial property damage.



CAUTION

The boards contain components which can be destroyed by electrostatic discharge. Your own body must be discharged before you touch an electronic board. The easiest way to do this is to touch a conductive, earthed object (such as bare metal part of cubicle) immediately beforehand.

Insert software module (EPROM) correctly in location D1 on the technology board (note recess or marking of pin 1, see Fig. 3.2). Then make sure that all pins are inserted correctly.

The T100 board can be installed only if the optional LBA (Local Bus Adapter, Order No. 6SE7090-0XX84-4HA0, description 6SE7090-0CX84-4HA0) is available. If this adapter is not already installed in the converter, it must be mounted in the basic unit before the technology board can be inserted.

Mounting Local Bus Adapter LBA:

- Pull out CU board (left-hand slot in electronics box) after detaching the connecting lead to the PMU and undoing the two fixing screws on the handles.
- Push LBA into electronics box (see diagram on right for position) until it is locked in position.
- Insert CU board back into slot on left, tighten fixing screws on handles and attach connecting lead to the PMU.

Mounting T100 board in electronics box

- Insert the T100 board carefully into the guide rails of the LBA in slot 2 and push into electronics box as far as possible.
- Fix board with fixing screws above and below the handles.

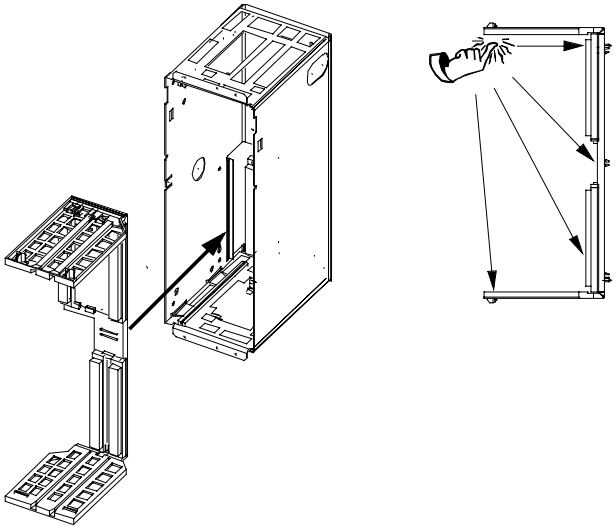

Fig. 2.1 Mounting of Local Bus Adapter LBA

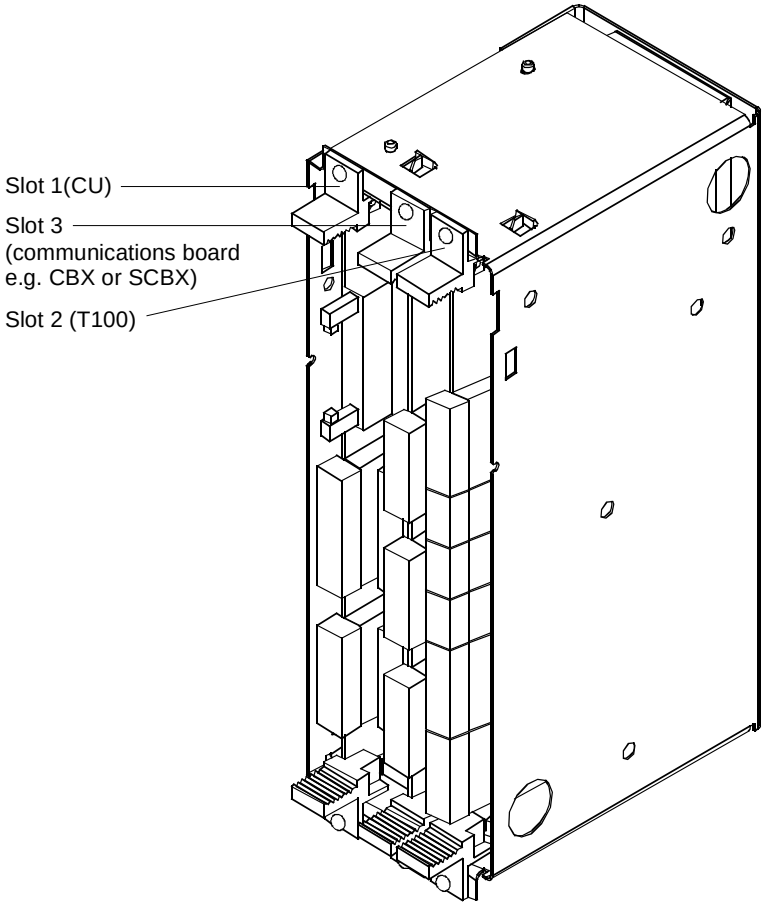

Fig. 2.2 Electronics box equipped with CU (slot 1),T100 (slot 2) and communications board (slot 3)

Slots in electronics box		**Boards**
Left	Slot 1 (CU)	CU
Centre	Slot 3 (options)	CB1 / SCB1 / SCB2
Right	Slot 2 (options)	T100

NOTE
The T100 technology board must always be inserted in slot 2 (right). The TSY cannot be installed if the box contains a T100. If only one option board is installed, then it must be inserted in slot 2. Only one of each option board type may be inserted in the electronics box. Order numbers for option boards and their descriptions can be found under chapter heading "Options" in the Operating Instructions for the Master Drives converter.

3 Connections



WARNING

The basic converter unit must be disconnected from the power supply before the control cables are connected to the T100.



CAUTION

The T100 contains components which can be destroyed by electrostatic discharge. These components can easily sustain irreparable damage if handled incorrectly.

Please also refer to precautionary measures against ESD described in introductory chapter "General".

3.1 Plug-in terminals for control terminal strip

Conductors with cross-sections of between 0.14 mm^2 and 1.5 mm^2 (AWG: 26 to 16), or 1 mm^2 (AWG: 18) finely stranded with ferrules, can be connected to the terminals (recommend-ed: 0.5 mm^2 (AWG: 20)). The connectors can be identified by the terminal numbers (Table 3.1), the connector position on the board is shown in Fig. 3.2.

Plug-in terminals		**Labelling**
X130	ten-pin, coded	50 51 52 53 T100 56 57 58 59
X131	five-pin	60 61 T100 64
X132	five-pin, coded	65 66 T100 69
X133	five-pin, coded	70 71 T100 74
X134	ten-pin, coded	75 76 77 78 T100 81 82 83 84
X136	eight-pin, coded	85 86 87 T100 90 91 92

Table 3.1 Control terminal strip

3.2 Connection of control cables

NOTE

The control cables must be screened and must be routed separately from the power cables. Minimum distance 20 cm. The screen must be connected at both ends. The screen is attached to the converter housing using screen clamps which must be mounted as shown in Fig. 3.1.

Control and power cables must cross each other at an angle of 90 °.

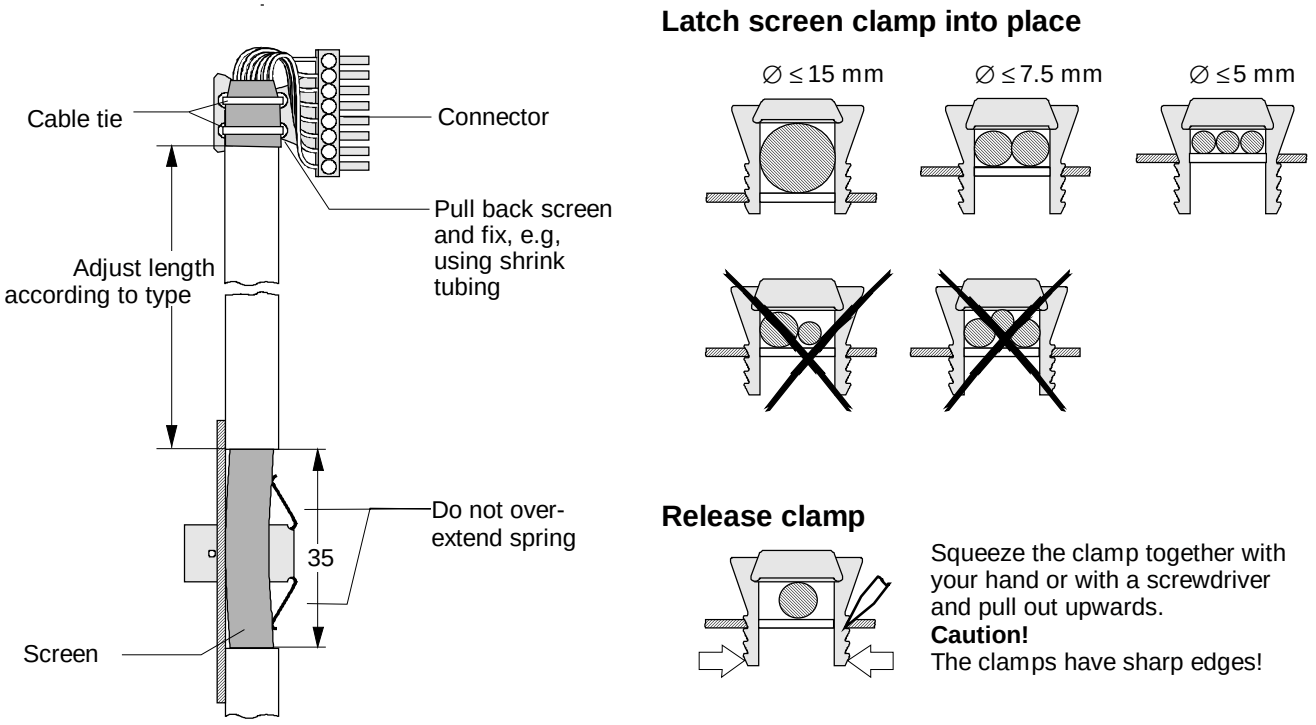

Fig. 3.1 Connection of control cables and handling of screen clamps

The "EMC screened housing" option should be used if so many control cables are required that two screen clamps are not sufficient.

Order number for basic converter frame size:

- Type A 6SE7090-0XA87-3CA0
- Type B 6SE7090-0XB87-3CA0
- Type C 6SE7090-0XC87-3CA0
- Type D 6SE7090-0XD87-3CA0

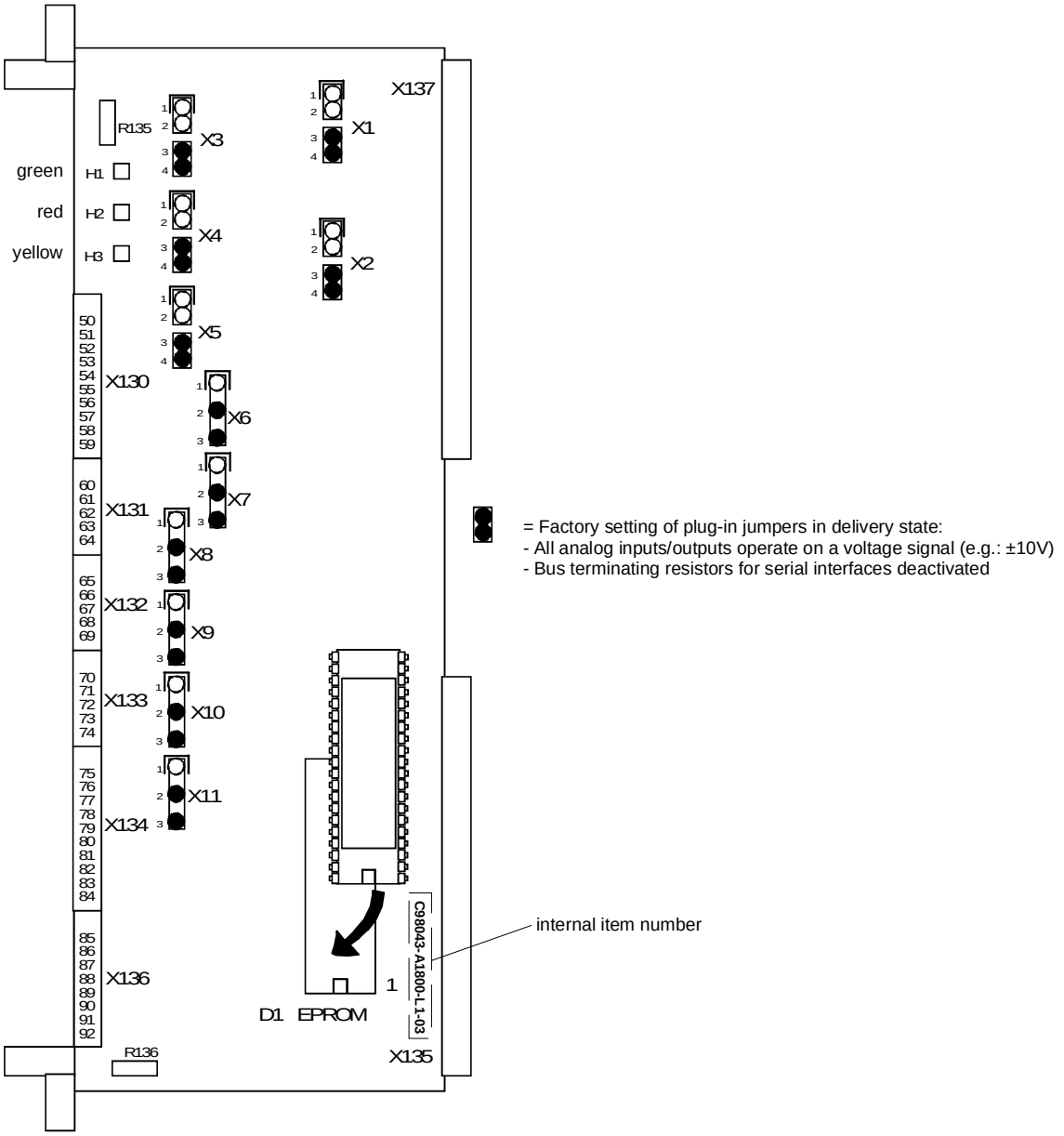

Fig. 3.2 Control terminals and actuators on T100 board

3.3 Terminals (see also terminal connection diagram, Fig. 1.1)

Connection example	Term-inal	Function, notes
±10V 20mA	X130-	**Analog inputs**
	50	Analog input 1, differential input positive
	51	Analog input 1, differential input negative
	52	Analog input 2, differential input positive
	53	Analog input 2, differential input negative
	54	Analog input 3
	55	Reference potential, analog input 3 M ③
	56	Analog input 4
	57	Reference potential, analog input 4 M ③
	58	Analog input 5
	59	Reference potential, analog input 5 M ③

Connection example	Term-inal	Function, notes
	X131-	**Analog outputs**
	60	Reference potential, analog output M ③
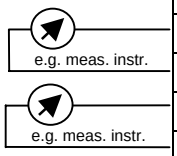	61	Analog output 1
	62	Reference potential, analog output 1 M ③
	63	Analog output 2
	64	Reference potential, analog output 2 M ③
	X132-	**Serial interface 1**
	65	Transmit and receive line RS485, differential input/output, pos. (RS485R/T+)
	66	Transmit and receive line RS485, differential input/output, neg. (RS485R/T–)
	67	Transmit and receive line RS485, differential input/output, pos. (RS485R/T+)
	68	Transmit and receive line RS485, differential input/output, neg. (RS485R/T–)
	69	Reference potential, RS485 interface M ③
	X133-	**Serial interface 2**
	70	Transmit output RS485 Standard, differential output, positive (RS485T+)
	71	Transmit output RS485 Standard, differential output, negative (RS485T–)
	72	Receive input RS485 Standard, differential input, positive (RS485R+)
	73	Receive input RS485 Standard, differential input, negative (RS485R–)
	74	Reference potential, RS485 interface M ③
ext.24V int.24V	X134-	**Binary inputs**
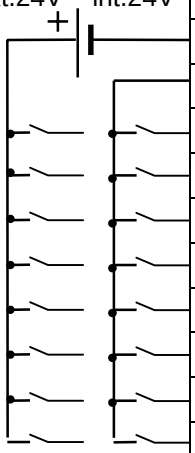	75	Reference potential for 24 V (Ground) for external supply M ③
	76	internal +24 V supply (output P24 INT)
	77	Binary input 1
	78	Binary input 2
	79	Binary input 3
	80	Binary input 4
	81	Binary input 5
	82	Binary input 6
	83	Binary input 7
	84	Binary input 8
ext.24V int.24V	X136-	**Binary outputs**
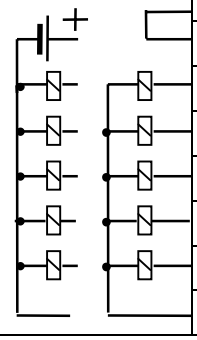	85	internal +24 V supply (output P24 INT)
	86	Infeed of +24V supply
	87	Binary output 1
	88	Binary output 2
	89	Binary output 3
	90	Binary output 4
	91	Binary output 5
	92	Reference ground for binary outputs M ③

Table 3.2 Connection example for control terminal strip X130, X131, X132, X133, X134 and X136

③ All M terminals of the T100 are electrically connected to each other and also to the frame and ground terminals of the basic unit.

Please refer to Chapter 6 "Technical Data" for further details.

3.4 Adjusting elements on technology board (see Fig. 3.2)

Resistors R135 and R136:
0Ω resistors as connection earth - ground M. M is connected to earth in the delivery state. These resistors should be removed only for the purpose of preventing disturbance caused by earth loops, i.e. if the electronics ground is connected to earth in some other way (e.g. via signal leads or to the ground of the power supply). The earth - ground M connections on the other electronics boards must then also be separated (see description of basic converter unit or of other option boards).
Plug-in jumpers:
Pin 1 of the plug-in jumpers has a screen-print marking. The distance between pin 2 and pin 3 on X1 and X5 is slightly larger to prevent them from being linked in a meaningless connection. Examples:

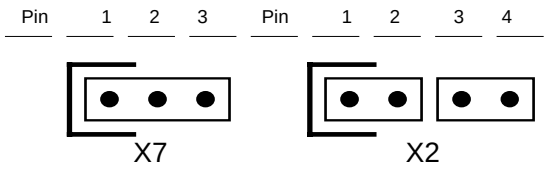

Plug-in jumper designation	Pin connection	Deliv. state	Function
X1 (X1-1)	1-2		Analog input 1: Current input
(X1-2)	3-4	x	Analog input 1: Voltage input
X2 (X2-1)	1-2		Analog input 2: Current input
(X2-2)	3-4	x	Analog input 2: Voltage input
X3 (X3-1)	1-2		Analog input 3: Current input
(X3-2)	3-4	x	Analog input 3: Voltage input
X4 (X4-1)	1-2		Analog input 4: Current input
(X4-2)	3-4	x	Analog input 4: Voltage input
X5 (X5-1)	1-2		Analog input 5: Current input
(X5-2)	3-4	x	Analog input 5: Voltage input
X6	1-2		Analog output 1: Current output
	2-3	x	Analog output 1: Voltage output
X7	1-2		Analog output 2: Current output
	2-3	x	Analog output 2: Voltage output
X8 ①	1-2		Bus terminator for RS485 interface 1 on X132 activated. This plug-in jumper must be set in the same way as jumper X9.
	2-3	x	Bus terminator for RS485 interface 1 on X132 deactivated. This plug-in jumper must be set in the same way as jumper X9.
X9 ①	1-2		Bus terminator for RS485 interface 1 on X132 activated. This plug-in jumper must be set in the same way as jumper X8.
	2-3	x	Bus terminator for RS485 interface 1 on X132 deactivated. This plug-in jumper must be set in the same way as jumper X8.
X10 ① ②	1-2		Bus terminator on receive input of RS485 interface 2 on X133 activated. This plug-in jumper must be set in the same way as jumper X11.
	2-3	x	Bus terminator on receive input of RS485 interface 2 on X133 deactivated. This plug-in jumper must be set in the same way as jumper X11.
X11 ① ②	1-2		Bus terminator for RS485 interface 2 on X133 activated. This plug-in jumper must be set in the same way as jumper X10.
	2-3	x	Bus terminator for RS485 interface 2 on X133 deactivated. This plug-in jumper must be set in the same way as jumper X10.

Table 3.3 Plug-in jumpers

① The purpose of the bus terminator is to prevent line reflections at both ends of the bus cable. It must be activated:

on both connected devices with a point-to-point connection
only on the devices connected at the start and end of the bus with a bus connection.

② Bus terminating resistors are soldered in at the transmit output of interface 2.

4 Start-up

The unit is started up according to the instructions given in the relevant chapter of the operating instructions for the basic converter. The range of available functions and the parameter settings for the T100 technology board can be found in the appropriate manual of the software module used.

5 Replacement of Boards

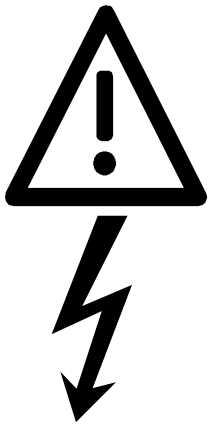

WARNING

The SIMOVERT Master Drives converters are operated on high voltages.

All work on the equipment must be carried out in compliance with national electrical standards (in Germany: VGB 4).

Maintenance and servicing work must be carried out by qualified personnel.

Only spare parts authorized by the manufacturer may be used.

Owing to the DC link capacitors, the unit remains at a dangerously high potential for at least 5 minutes after disconnection from the supply. The unit must not therefore be opened for at least 5 minutes after supply disconnection.

Voltage may be present at the power terminals and control terminals even when the motor is stationary.

If you need to work on the unit when it is switched on:

- Do not touch any live parts.
- Make sure that you use proper measuring instrumentation and protective clothing.
- Stand on a non-earthed, insulated and anti-ESD surface.

Failure to observe this warning can result in death, severe personal injury or substantial property damage.

Before contacting your Siemens service department with an enquiry, make sure that you know the internal item number (version) of the T100. You will find this number on the board (see Fig. 3.2).

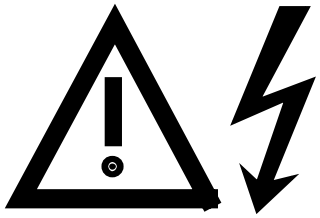

WARNING

Boards may only be replaced by qualified personnel.

Boards must not be removed or inserted when the power supply is connected.

Failure to observe this warning can result in death, severe personal injury or substantial property damage.



CAUTION

The boards contain components which can be destroyed by electrostatic discharge. Your own body must be discharged before you touch an electronic board. The easiest way to do this is to touch a conductive, earthed object (such as bare metal part of cubicle) immediately beforehand.

Replacing a T100 board in the electronics box

- Undo the board's fastening screws above and below the withdrawing handles (see Fig. 2.2).
- Use the handles to withdraw the board carefully out of the electronics box, making sure that the board does not catch on any adjacent parts.
- Insert plug-in jumpers on the new replacement T100 board in the same way as on the old one (see Fig. 3.2 and Chapter 3.4) if you wish the functions to remain the same.
- Mount software module on the new technology board (see Chapter 2.2).
- Push new board carefully along guide rails into electronics box as far as it will go.
- Fix the new board in position by tightening the fixing screws above and below the handles.
- The system setting of the technology parameters must be input again for the T100 (see manual of the software module used).

6 Technical Data

If the anticipated service conditions for your board differ from those specified in this chapter, please contact your Siemens regional office or national company.

Board name			T100 technology board
Order number			6SE7090-0XX87-0BB0
Rated input voltages (supplied by basic converter via "Local Bus Adapter")	+5V	±5%	max. power consumption 720mA
	+15V	±5%	max. power consumption 100mA
	-15V	±5%	max. power consumption 60mA
	+24V	(20-33V)	max. power consumption 135mA with internal supply
Use of an external +24 V DC power supply infeed: Extra power consumption due to T100 in addition to power consumed by basic converter			max. 550 mA
Cooling medium temperature			0 °C to +55 °C
Temperature in storage			– 25 °C to +70 °C
Temperature during shipment			– 25 °C to +70 °C
Environment class	3K3		DIN IEC 721-3-3 / 04.90
Degree of pollution	2		DIN VDE 0110 Part 1 / 01.89 condensation not permitted

Mechanical strength DIN IEC 68-2-6 / 06.90

	Frequency range	Constant amplitude of	
		excursion	acceleration
	Hz	mm	m/s^2 (g)
– when stationary (in op.)	10 to 58	0.075	
	above 58 to 500		9.8 (1)
– during transportation		3.5	
			9.8 (1)

Technical data of inputs / outputs (terminalfunctions):

Analog inputs
(resolution: 10 bits plus sign, non-floating, switchover between voltage and current signal by means of plug-in jumpers X1 to X5 (see Chapter 3.4))

Analog inputs with a differential input: (terminals 50 to 53)
Voltage signal 0 V to ±10 V: Common mode range ±10 V, differential input resistor, type 36 kΩ ④
Current signal 0 mA to 20 mA or 4 mA to 20 mA: internal burden 250 Ω

Analog single-ended inputs: (terminals 54 to 59)
Voltage signal 0 V to ±10 V: input resistance typ. 24 kΩ ④
Current signal 0 mA to 20 mA or 4 mA to 20 mA: internal load 250 Ω

Analog outputs
(resolution: 9 bits plus sign, non-floating, switchover between voltage and current signal by means of plug-in jumpers X6 and X7 (see Chapter 3.4))

Voltage signal 0 V to ±10 V: load rating ≤ 5 mA ≙ > 2 kΩ
Current signal 0 to 20mA or 4 to 20mA: max. load 500Ω

④ Overmodulation capability: input voltages of up to ±12V can be overmodulated via the software.

Serial interfaces 1 (USS protocol) and 2 (peer-to-peer protocol)

Interface 1 on terminals X132-65, -66 exists in parallel again on terminals X132-67, -68. The potential difference between the data reference potentials of all interfaces must not exceed ±7V on either serial interface. If this cannot be guaranteed, then equipotential bonding must be created between the connected devices. Neither of the interfaces is floating. The maximum permissible cable length is 1000m in each case, but only 500m for a baud rate of 187.5 kbits/sec.

Binary inputs (non-floating)

Terminal X134-76: +24 V supply (output) for binary inputs and outputs (connected internally to X136-85), max. total load at terminals X134-76 and X136-85: 90 mA
Signal level of the binary inputs: **H** = 24 V (13 V to 33 V)
L = 0 V (- 33 V to 3 V)
I_{rated} = 5.5 mA at 24V (input resistance 4.4KΩ typ.)

Binary outputs (non-floating)

Terminal X136-85: +24 V supply (output) for binary inputs and outputs (connected internally to X134-76), max. total load at terminals X134-76 and X136-85: 90 mA
Terminal X136-86: Infeed of +24 V supply for binary outputs (externally or via X136-85).
Power consumption of terminal: max. 20mA
Load rating of binary outputs: max. 90mA per terminal with external supply, short-circuit-proof and overload-proof. The short-circuit current is smaller than 1A. The maximum response time of the short-circuit contactor is 200 µs. A capacitive load capability of up to 700 nF is possible. The starting inrush current must be taken into account when indicator lights are connected. This can be ten times higher than the rated current value (in case of doubt use LED lamps or install intermediate relays). The starting current must not be higher than 90 mA. Inductive loads (e.g. contactors, relays) must be provided with suppression elements.

The binary outputs can be connected in parallel. In this case, it is important that the parallel-connected binary outputs are driven via the same binector. The maximum permissible current load is shown in Table 6.1:

Number of binary outputs connected in parallel:	Maximum permissible current load in mA:
2	150
3	210
4	270
5	330
6	390

Table 6.1: Current-carrying capacity for parallel-connected binary outputs

Signal level of the binary outputs: **H** = 24 V [greater (potential at terminal 86 minus 2.5 V)]
L = 0 V (smaller than 2.0 V)

6.1 Applicable standards

DIN VDE 0110 Parts 1 and 2 A01.89 Insulation Coordination for Electrical Equipment in Low-Voltage Installations

DIN VDE 0160 E12.90 A05.88 Electronic Equipment for High-Power Electrical Installations

Sources:

DIN Standards and other national standards (overseas): Beuth-Verlag GmbH, Burggrafenstraße 6, 10787 Berlin, Germany

DIN VDE Specifications: VDE-Auslieferungsstelle, Merianstraße 29, 63069 Offenbach, Germany

6.2 Declaration of manufacture

SIEMENS

EG-Herstellererklärung

(nach Art. 4 Abs. 2 der EG-Richtlinie 89/392/EWG MSR)

C98043-A1800-L1-01-K6

Hersteller: Siemens Aktiengesellschaft Österreich
Gerätewerk Wien

Anschrift: Siemensstraße 88-92
A-1210 Wien

Produktbezeichnung: Option Technologiebaugruppe T100
für Geräteserie SIMOVERT Master Drives 6SE7 . . .
6SE7090-0XX87-0BB0

Das bezeichnete Produkt ist ausschließlich zum Einbau in eine andere Maschine bestimmt. Die Inbetriebnahme ist solange untersagt, bis die Konformität des Endproduktes mit der Richtlinie 89/392/EWG des Rates, festgestellt ist.

Wir bestätigen die Konformität des oben bezeichneten Produktes mit den Normen:

EN 60204-1 (DIN EN 60204 Teil 1 / VDE 0113 Teil 1)

VDE 0160

Wien, den 20. 06. 1995

Siemens Aktiengesellschaft

Rummel, GWW-SR
Leiter der Produktionseinheit Stromrichtergeräte

Groß, GWW-SRL
Leiter der Logistik Stromrichtergeräte

Diese Erklärung ist keine Zusicherung von Eigenschaften.

Die Sicherheitshinweise der mitgelieferten Produktdokumentation sind zu beachten.

HRSTER07.DOC Copyright (©) SIEMENS AG 1995 Alle Rechte vorbehalten C98043-A1800-L1-01-K6 Seite 1 von 1

EC declaration of manufacture (in accordance with Art. 4 paragraph 2 of EC directive 89/392/EEC)

Manufacturer : **Siemens AG Österreich EWW A&D Siemensstraße 88-92 A-1211 Wien**

T100 technology board option for the SIMOVERT MasterDrives 6SE7... series of units.

The product indicated is intended solely for fitting in another machine. Commissioning is prohibited until the conformity of the end product with EC directive 89/392/EEC has been established.

We confirm conformity of the product indicated above with the standards: see page 1

This declaration is not a warranty of attributes within the meaning of the Product Liability.
The safety notes given in the product documentation must be observed!

Déclaration constructeur CE (selon Art. 4 paragr. 2 de la Directive Européene 89/392/CEE)

Constructeur : **Siemens AG Österreich EWW A&D Siemensstraße 88-92 A-1211 Wien**

Option carte technologique T100 pour gamme de variateurs SIMOVERT Master Drives 6SE7...

Le produit décrit ci-dessus est exclusivement destiné à être intégré dans une autre machine. La mise en service est défendue aussi longtemps que la conformité du produit final avec la directive 89/392/CEE n'a pas été établie.

Nous certifions la conformité du produit mentionné ci-dessus avec les normes: page 1

Cette déclaration n'est pas une garantie des propriétés au sens de responsabilité civile du fait des produits.
Respecter les règles de sécurité de la documentation du produit!

Declaración de conformidad CE del fabricante (según el Art. 4, apartado 2 de la Directiva CE 89/392/CEE)

Fabricante : **Siemens AG Österreich EWW A&D Siemensstraße 88-92 A-1211 Wien**

Opción tarjeta tecnológica T100 para la serie de equipos SIMOVERT Master Drives 6SE7...

El producto especificado está destinado exclusivamente a su montaje en otra máquina. Se prohibe la puesta en servicio mientras no se haya comprobado que el producto final concuerda con la Directiva 89/392/CEE.

Confirmamos que el producto especificado cumple las siguientes normas: véase pagina 1

Esta declaración no garantiza ninguna propiedad en el sentido de responsabilidad civil sobre productos.
Observar las indicaciones de seguridad en la documentación del producto!

Dichiarazione CE del costruttore (in conformità all'art. 4 paragr. 2 della direttiva CE 89/392/CEE)

Costruttore : **Siemens AG Österreich EWW A&D Siemensstraße 88-92 A-1211 Wien**

Opzione scheda tecnologica T100 per serie di apparecchi SIMOVERT Master Drives 6SE7...

Il prodotto indicato è destinato esclusivamente a far parte di un'altra macchina. La messa in servizio è vietata fino a quando non sia verificata la conformità del prodotto finale alla direttiva 89/392/CEE.

Si certifica la conformità del prodotto denominato alle norme seguenti: vedi pagina 1

La presente dichiarazione non rappresenta una garanzia delle caratteristiche di funzionamento del prodotto.
Vanno osservate le istruzioni di sicurezza riportate nella documentazione del prodotto!

Bisher sind folgende Ausgaben erschienen:
The following editions have been published so far:
Editions antérieures:
Hasta ahora han aparecido las siguientes ediciones:
Finora sono state pubblicate le seguenti edizioni:

Ausgabe **Edition** **Edition** **Edición** **Edizione**	**interne Sachnummer** **Internal Item No.** **Référence interne** **Nº de referencia interna** **Numero interno**
A	C98043-A1800-L1-01-19
B	C98043-A1800-L1-02-19
C	C98043-A1800-L1-03-6419
D	C98043-A1800-L1-04-6419

Ausgabe **D** besteht aus folgenden Kapiteln
Edition **D** consists of the following chapters
L'édition **D** comprend les chapitres suivants
La edición **D** consta de los capítulos siguientes
L'edizione **D** comprende i seguenti capitoli

Kapitel **Chapter** **Chapitre** **Capítulo** **Capitolo**		**Seiten** **No. of pages** **Page** **Páginas** **Pagine**	**Ausgabedatum** **Date of issue** **Date d'édition** **Fecha de edición** **Data edizione**
0	Allgemeines / General / Généralités / Generalidades / Generalità	6	12.95
1	Beschreibung / Description / Description / Descripción / Descrizione	2	01.00
2	Transportieren, Auspacken, Montieren / Transport, Unpacking, Installation/ Transport, déballage, montage / Transporte, desembalaje, montaje / Trasporto, sballaggio, montaggio	3	12.95
3	Anschließen / Connections / Raccordement / Conexión / Allacciamento	5	01.00
4	Inbetriebsetzen / Start-up / Mise en service / Puesta en servicio / Messa in servizio	1	12.95
5	Austausch von Baugruppen / Replacement of Boards / Remplacement de cartes / Sustitución de tarjetas / Sostituzione di cartelle	1	01.00
6	Technische Daten / Technical Data / Caractéristiques techniques / Datos técnicos / Dati tecnici	4	01.00

Bereich
Gerätewerk Wien
Postfach 83, A-1211 Wien

Excellence in Automation & Drives: Siemens

Siemens Aktiengesellschaft

Änderungen vorbehalten
Subject to change without notice
Sous réserve de modifications
Sujeto a cambios sin previo aviso
Con riserva di apportare modifiche

Bestell-Nr./Order No./N° de réf./Referencia/
Nr. di ordinazione: 6SE7080-0CX87-0BB0

Printed in Austria

Siemens AG 6SE7080-0CX87-0BB0
Technologiebaugruppe T100 Betriebsanleitung
T100 Technology Board Operating Instructions
Carte technologique T100 Instructions de service
Tarjeta tecnológica T100 Instrucciones de servicio
Cartella tecnologicape T100 Istruzioni di servizio

SIEMENS

T100 Technology Board for MASTERDRIVES and DC MASTER Manual for Software Module MS100 "Multi-Purpose Drive"

Operating Instructions Software

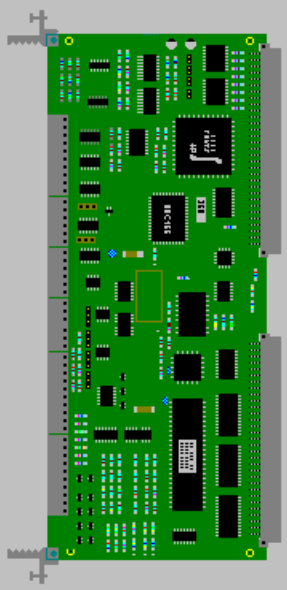

Edition: **F**

Order No.: 6SE7087-6CX84-0BB1

These Operating Instructions are available in the following languages:

Language	German	French	Spanish	Italian
Order No. 6SE70..	80-0CX84-0BB1	87-7CX84-0BB1	87-8CX84-0BB1	87-2CX84-0BB1

Software Version: 1.0 to 1.3

The reproduction, transmission or use of this document or its contents is not permitted without express written authority. Offenders will be liable for damages. All rights, including rights created by patent grant or registration of a utility model or design, are reserved.

We have checked the contents of this document to ensure that they coincide with the described hardware and software. However, differences cannot be completely excluded, so that we do not accept any guarantee for complete conformance. However, the information in this document is regularly checked and necessary corrections will be included in subsequent editions. We are grateful for any recommendations for improvement.

SIMOVERT ® Registered Trade Mark

© Siemens AG 1995 All rights reserved

Contents

Page

0 Definitions ... 0-4

1 Description ... 1-1
1.1 Applications ... 1-1
1.2 Mode of operation and diagnostics LEDs ... 1-1
1.3 How to use the software manual ... 1-1
1.4 Hardware requirements for operation of the T100 board ... 1-2

2 Block Diagram ... 2-1

3 Function Descriptions ... 3-1
3.1 General explanation of terms and functionality ... 3-1
3.2 Sampling times and processing sequence ... 3-4
3.3 Analog inputs ... 3-5
3.4 Analog outputs ... 3-5
3.5 Serial USS interface ... 3-7
3.6 Serial peer-to-peer interface ... 3-11
3.7 Operation with a communications board (CBx, SCBx) ... 3-17
3.8 Exchange of signals with MASTERDRIVE MC / VC from 1997 / 98 ... 3-20
3.9 Exchange of signals with MASTERDRIVE FC / VC / SC from 1995 ... 3-22
3.10 Selecting factory setting for T100 parameters via H970 = 0 ... 3-23
3.11 Dynamic reading or writing of basic unit parameters ... 3-23
3.12 Technology controller ... 3-24
3.13 Comfort ramp-function generator ... 3-25
3.14 Motorized potentiometer ... 3-27
3.15 Wobble generator ... 3-28

4 Parameter Handling and Parameter List ... 4-1
4.1 Parameterization inputs on PMU and OP1 parameterizing units ... 4-1
4.2 Access to technology parameters via a serial interface ... 4-1
4.3 Parameter list ... 4-3

5 List of Connectors and Binectors ... 5-1
5.1 Connector list ... 5-1
5.2 Binector list ... 5-7

6 Start-up and Parameterization ... 6-1

7 Procedure for Replacing Software or T100 Board ... 7-1

8 Faults and Alarms ... 8-1
8.1 Fault messages ... 8-1
8.2 Alarm messages ... 8-3

9 SIMOVIS Service Program for PC/Programmer ... 9-1

10 Configuring Example ... 10-1

11 Index of Available Instruction Manuals and Software Components for T100 ... 11-1

12 Changes ... 12-1
12.1 Software version 1.0 ... 12-1
12.2 Software version 1.1 ... 12-1
12.3 Software version 1.2 ... 12-2
12.4 Software version 1.3 ... 12-2

0 Definitions

- QUALIFIED PERSONNEL

  For the purpose of these instructions and the product labels, a "Qualified person" is someone who is familiar with the installation, mounting, start-up and operation of the equipment and the hazards involved. He or she must have the following qualifications:

  1. Trained and authorized to energize, de-energize, clear, ground and tag circuits and equipment in accordance with established safety procedures.
  2. Trained in the proper care and use of protective equipment in accordance with established safety procedures.
  3. Trained in rendering first aid.

- DANGER

  For the purpose of these instructions and the product labels, "Danger" indicates, death, severe personal injury or substantial property damage will result if proper precautions are not taken.

- WARNING

  For the purpose of these instructions and the product labels, "Warning" indicates that death, severe personal injury or property damage can result if proper precautions are not taken.

- CAUTION

  For the purpose of these instructions and the product labels, "Caution" indicates that minor personal injury or property damage can result if proper precautions are not taken.

- NOTE

  For the purpose of these instructions, "Note" indicates information about the product or the respective part of the Instruction Manual to which special attention should be paid.

NOTE
These instructions do not purport to cover all details or variations in equipment, nor to provide for every possible contingency to be met in connection with installation, operation or maintenance. Should further information be desired or should particular problems arise which are not covered sufficiently for the purchaser’s purposes, the matter should be referred to the local Siemens sales office. The contents of this Instruction Manual shall not become part of or modify any prior or existing agreement, commitment or relationship. The sales contract contains the entire obligation of Siemens. The warranty contained in the contract between the parties is the sole warranty of Siemens. Any statements contained herein do not create new warranties or modify the existing warranty.

CAUTION

Components which can be destroyed by electrostatic discharge (ESD)

The board contains components which can be destroyed by electrostatic discharge. These components can be easily destroyed if not carefully handled. If you have to handle electronic boards, please observe the following:

- Electronic boards should only be touched when absolutely necessary.
- You must ensure that your own body has been discharged before you touch a board (the best way to do this is to touch an earthed, conductive object such as a socket-outlet earth contact).
- Boards must not come into contact with highly insulating materials – e.g. plastic foils, insulated desktops, articles of clothing made from man-made fibres.
- Boards may only be placed on surfaces which are conductive.
- When soldering, the soldering iron tip must be grounded.
- Boards and components should only be stored and transported in conductive packaging (e.g. metalized plastic boxes, metal containers).
- If the packing material is not conductive, the boards must be wrapped in a conductive packaging material, e.g. conductive foam rubber or household aluminium foil.

The necessary ESD protective measures are illustrated again below:

a	=	Conductive floor surface	d	=	ESD overall
b	=	ESD table	e	=	ESD chain
c	=	ESD footwear	f	=	Cubicle ground connection

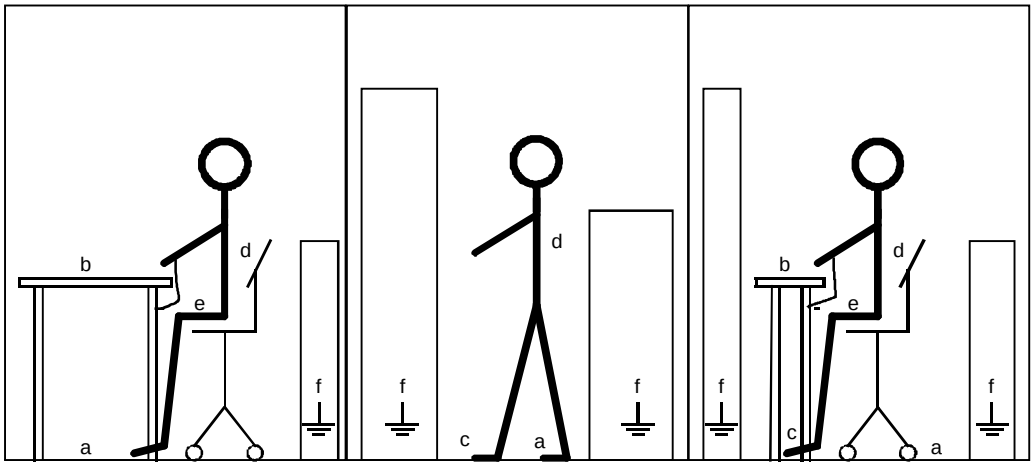

Seated **Standing** **Seated/standing**

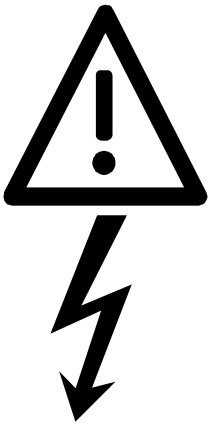

WARNING

Hazardous voltages are present in this electrical equipment during operation.

Owing to the DC link capacitors in the connected SIMOVERT Master Drives, the unit remains at a hazardous potential for up to 5 minutes after it has been disconnected (power connection and electronics power supply). For this reason, wait at least 5 minutes before opening the unit after it has been switched off.

Failure to observe these safety instructions can result in death, severe personal injury or substantial property damage.

Only qualified personnel should work on or around the equipment after first becoming thoroughly familiar with all warnings and maintenance procedures contained in these Instructions.

The successful and safe operation of this equipment is dependent on proper handling, storage, installation, operation and maintenance.

1 Description

1.1 Applications

The T100 technology board is a supplementary board in the SIMOVERT Master Drives 6SE70 and SIMOREG DC MASTER series. It is possible to access all important signals and parameters of the technology board and the basic converter via an additional communications board in the electronics box. The access mechanism and the unit reactions of the T100 are identical to those of the SIMOVERT Master Drives basic converter unit.

The software module MS100 "Multi-Purpose Drive" extends the basic converter by a large number of drive-related, process-oriented functions such as:

- Higher-level PID controller
- Comfort ramp-function generator
- Comfort motorized potentiometer
- Wobble generator
- 2 serial interfaces
- A large number of arithmetic, closed-loop control and logic blocks which can be freely interconnected by means of parameterization.

1.2 Mode of operation and diagnostics LEDs

The T100 has a high-speed 16-bit microprocessor and its own parameter memory. The board is parameterized via the basic converter unit, i.e. by means of the parameterizing unit PMU, the optional operator control unit OP1 or the SIMOVIS service program on a PC connected to the basic converter.

There are three diagnostic LEDs on the T100 board which indicate the following operating states:

- Middle, red LED flashing (3Hz): T100 is operating fault-free in cyclic mode
- Bottom, yellow LED flashing (3Hz): Data exchange between T100 and the basic converter O.K. (basic converter increments heartbeat counter correctly)
- Top, green LED flashing (3Hz): Data exchange between T100 and communications board O.K. (communications board increments heartbeat counter correctly)

For a description of the board (connections, technical data, etc.), please refer to the "Hardware Operating Instructions" for the T100 board (order no.: 6SE7080-0CX87-0BB0).

1.3 How to use the software manual

Virtually all the important hardware and software functions of the T100 are illustrated in the ***block diagram*** in Chapter 2. Instructions on how to read this diagram are given in Chapters 3.1 and 10.

Start-up, faults and alarms are described in Chapters 6 and 8.

You can skip the other chapters initially and refer to them only when you need to find out more about a function, a parameter or a connector.

1.4 Hardware requirements for operation of the T100 board

MASTER DRIVES basic units (new series from 1997 / 98)

The T100 has been approved for operation in the following MASTER DRIVES basic units:

- ❑ SIMOVERT VC with CUVC electronics board
- ❑ SIMOVERT MC with CUMC electronics board

The T100 can only be mounted in compact, chassis or cubicle converters, but not in compact PLUS units.

The following diagram illustrates the rules regarding permissible board combinations in the electronics box:

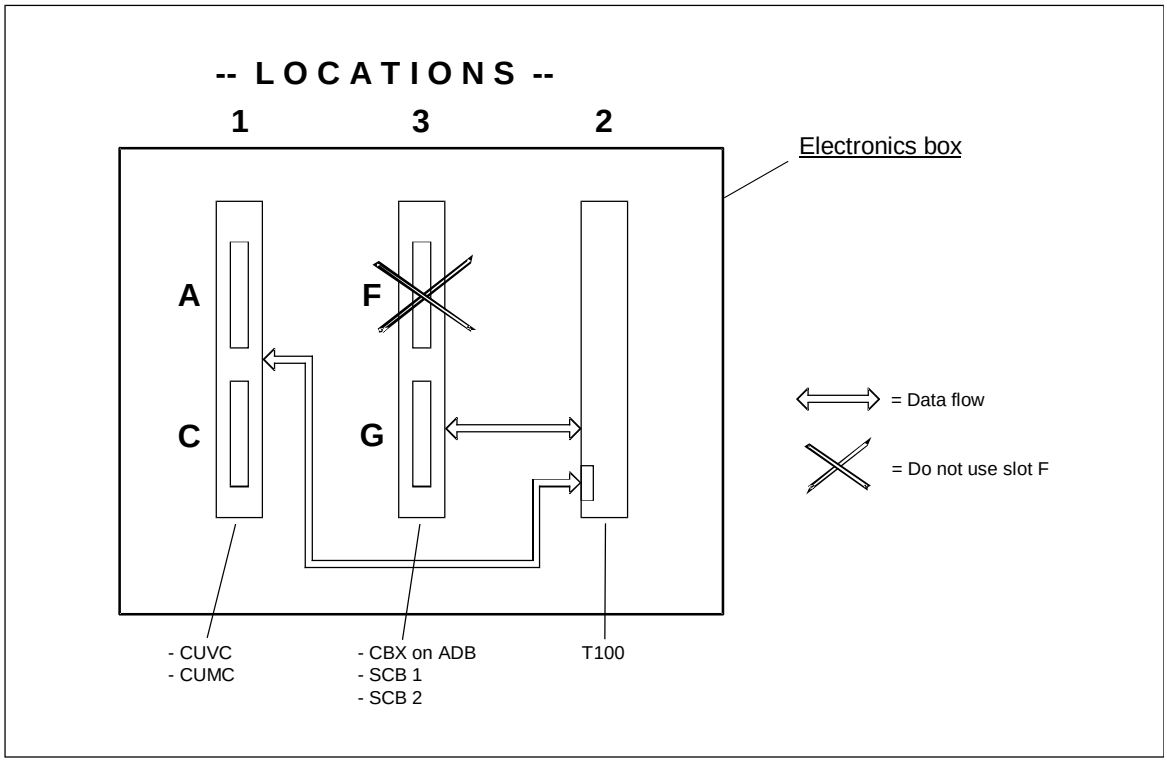

- The T100 must be mounted in location 2.
- A maximum of one communications board may be installed. It must be mounted in location 3. Communications slot cards (e.g. CBP, CBC etc.) must be mounted on an ADB adapter board in slot G.
- The communications board communicates directly with the T100.
- If a SIMOLINK SLB interface is used, it must be inserted in a slot on the CUVC or CUMN basic electronics board, preferably in slot A. The SLB communicates directly with the basic unit, signal connections to the T100 can be made by means of binector/connector links.

CAUTION:	The SIMOLINK SLB interface can only operate in conjunction with T100 hardware product version C9843...-L1-08 or later. The hardware product version is printed near the lower backplane connector on the component side of the T100 board.

MASTER DRIVES basic units (old series from 1995 onwards)

The T100 has been approved for operation in the following MASTER DRIVES basic units:

- ❑ SIMOVERT FC, software version 1.2 or higher (delivery from approx. end of August, 1995)
- ❑ SIMOVERT VC, software version 1.2 or higher (delivery from approx. end of August 1995)
- ❑ SIMOVERT SC, software version 1.1 or higher (delivery from approx. beginning of September, 1995)

CAUTION:	When a T100 or T300 board is installed in a SIMOVERT SC unit, the pulse frequency of the converter must not be increased above the factory setting value of P761 = 5 kHz to avoid overloading the converter processor.

☐ SIMOVERT rectifier/regenerating unit, software version 2.4 or higher (delivery from approx. end of August, 1995).

There are two ways to determine the software version of a basic unit:

1) The software version can be read out in parameter r720,001

2) The software version is printed on the stickers on the EPROM modules on the basic electronics board CUx in slot 1:

   • With FC, VC and SC units, the software version is coded in the last 4 characters of the first line on the EPROM sticker
   Examples: "...1Axx" = software version 1.0
   "...1Cxx" = software version 1.2
   "...2Exx" = software version 2.4
   The correct software version in VC units is also printed on the sticker attached to one of the two large, light-grey bus connectors. The letter "K" or a following letter in the alphabet indicating the product version must be marked on the sticker.

   • In the rectifier/regenerating unit, the software version is indicated by the last two characters of the bottom line on the EPROM sticker.
   Example: "...A101-24" = software version 2.4

SIMOREG 6RA70 basic units

Approval of the T100 for use in 6RA70 units is scheduled for mid-1998.

T100 parameter settings

The following devices can be used to set the parameters of the T100 board:

- ❑ Standard parameterizing unit (PMU) for basic converters
- ❑ A PC or programmer with the service program "SIMOVIS for T100" (see Chapter 9)
- ❑ Optional OP1S plaintext operator device
- ❑ Optional OP1 plaintext operator device, version 1.00 or higher (delivery from approx. July 1995).
  There are two ways to determine the correct version of an OP1 device:

  1) When the device is switched on, the message "1.00" or higher will appear briefly on the LCD display.
  2) There is a sticker on the rear panel of the OP1. The last 4 digits of the number printed at the bottom of this sticker must be "9520" or higher (year of manufacture 1995/week of manufacture 20)

CAUTION:	An OP1 device must have software version 1.02 or higher if it is to be used to parameterize a T300 technology board.

Communication boards
The T100 can be combined with the following communications boards

- ❑ PROFIBUS-DP CBP interface

- ❑ PROFIBUS-DP interface CB1, version V1.2 or higher (printed on sticker attached to 28-pin EPROM module on CB1 board). Earlier versions of the CB1 can also be used provided the user does not want to read or write any technology board parameters via the PROFIBUS-DP.

- ❑ SCB2 board:
  The SCB2 has a floating serial interface which is capable of operating with either a USS protocol or a peer-to-peer protocol. The software version installed on the SCB2 must be 1.3 or higher. The interface can also be operated with an earlier software version provided that only the peer-to-peer protocol is used or in cases where the user does not wish to read or write technology board parameters via the USS protocol.
  The software version of the SCB2 can be read out in parameter r720.002 or 003. It is also printed on the sticker attached to the EPROM module of the SCB2. The coding system applying to the sticker is described in the section headed "MASTER DRIVES basic units FC, VC and SC".

- ❑ SCB1 board (optionally with SCI1 and/or SCI2):
  The SCB1 is equipped with a fibre-optic interface for peer-to-peer or terminal extension.

- ❑ CAN - CBC bus interface

- ❑ DeviceNet CBD interface

Note 1: All parameters of both the Master Drives basic unit and the T100 board can be read and written via any of the serial interfaces (except for the peer-to-peer link).

Note 2: The T100 has not yet been approved for operation with the SIMOLINK SLB interface in board location 3. If a SIMOLINK interface is to be used, it must be inserted in a slot on the CU board (preferably in slot A) so that it can communicate directly with the basic unit.

Note 3: It is essential to follow the instructions given in Chapter 3.7 regarding the permissible slots for communications boards in "slot card format".

2. Block diagram

The block diagram includes the full range of available functions. Further explanations are given in Chapter 3 (Function Descriptions) and Chapter 4 (Parameter List) in the form of a description of the appropriate parameters.

Block diagram of T100 technology board - table of contents

Contents	Sheet
Overview, hardware connection diagram	1
5 analog inputs	2 / 3
2 analog outputs	4
8 binary inputs	5 / 6
5 binary outputs	7
15 fixed setpoints	8
6 fixed control bits	8
5 connector displays	8
1 high-resolution connector display	8
4 binector displays	8
4 fault message trigger signals to basic converter	8
4 alarm message trigger signals to basic converter	9
Voltage monitoring of electronics power supply	9
Process data exchange with basic converter:	
Actual values from basic unit	10, 10a
Setpoints to basic unit	10, 10a
Control word 1/2 to basic unit	11 / 12
Status word 1/2 from basic unit	13 / 14
Read or write basic converter parameters dynamically	15
Data exchange via USS interface:	
Receive data	16
Transmit data	16
Data exchange via peer-to-peer connection:	
Receive data	17
Transmit data	17
Process data exchange with COM BOARD (CBx, SCBx):	
Receive data	18
Transmit data	18
3 connector/binector converters	19
3 binector/connector converters	20
1 technology controller	21
1 comfort ramp-function generator	22
1 motorized potentiometer	23

Contents	Sheet
1 wobble generator	24
5 adders	25
3 subtractors	25
3 sign inverters	25
1 switchable sign inverter	25
3 dividers	26
4 multipliers	26
3 high-resolution multipliers/ dividers	
4 absolute value generators with filter	27
2 limiters	27
2 limit-value monitors with filter	27
1 maximum selection	28
1 minimum selection	28
2 tracking/storage elements	28
2 analog signal memories	28
10 analog signal switches	29
1 simple ramp-function generator	30
1 dead zone	30
3 characteristic blocks	30
1 velocity/speed calculator	31
16 AND gates with 3 inputs each	32
8 OR gates with 3 inputs each	32
8 inverters	33
3 EXCLUSIVE-OR gates with 2 inputs each	33
6 NAND gates with 3 inputs each	33
7 RS flipflops	34
2 D flipflops	34
5 timers	35
4 binary signal switches	35
Parameter set switchover	36 / 37

Explanation of symbols

(see also Chapter 3.1)

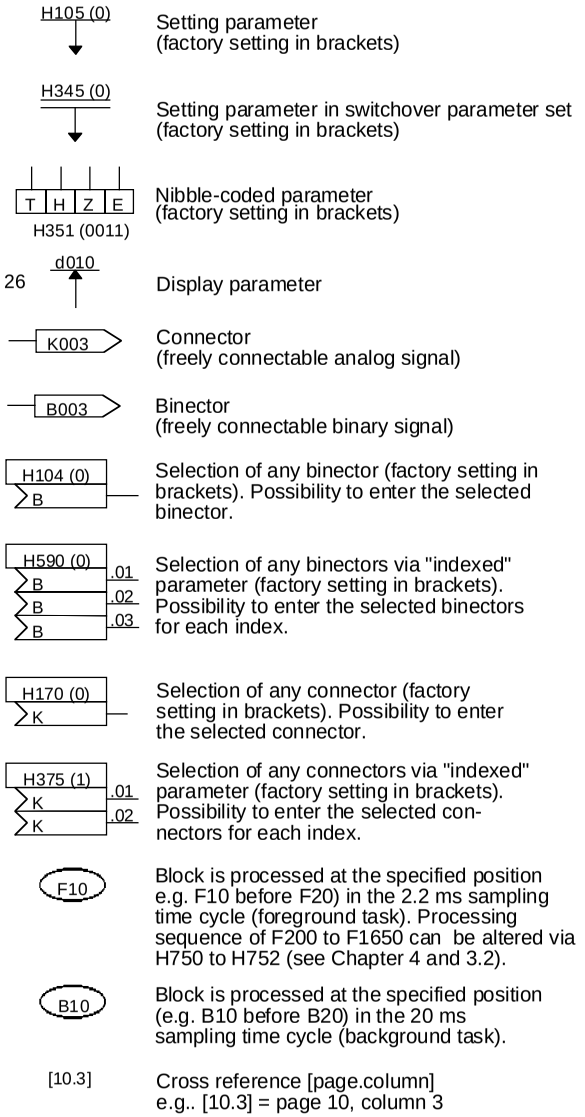

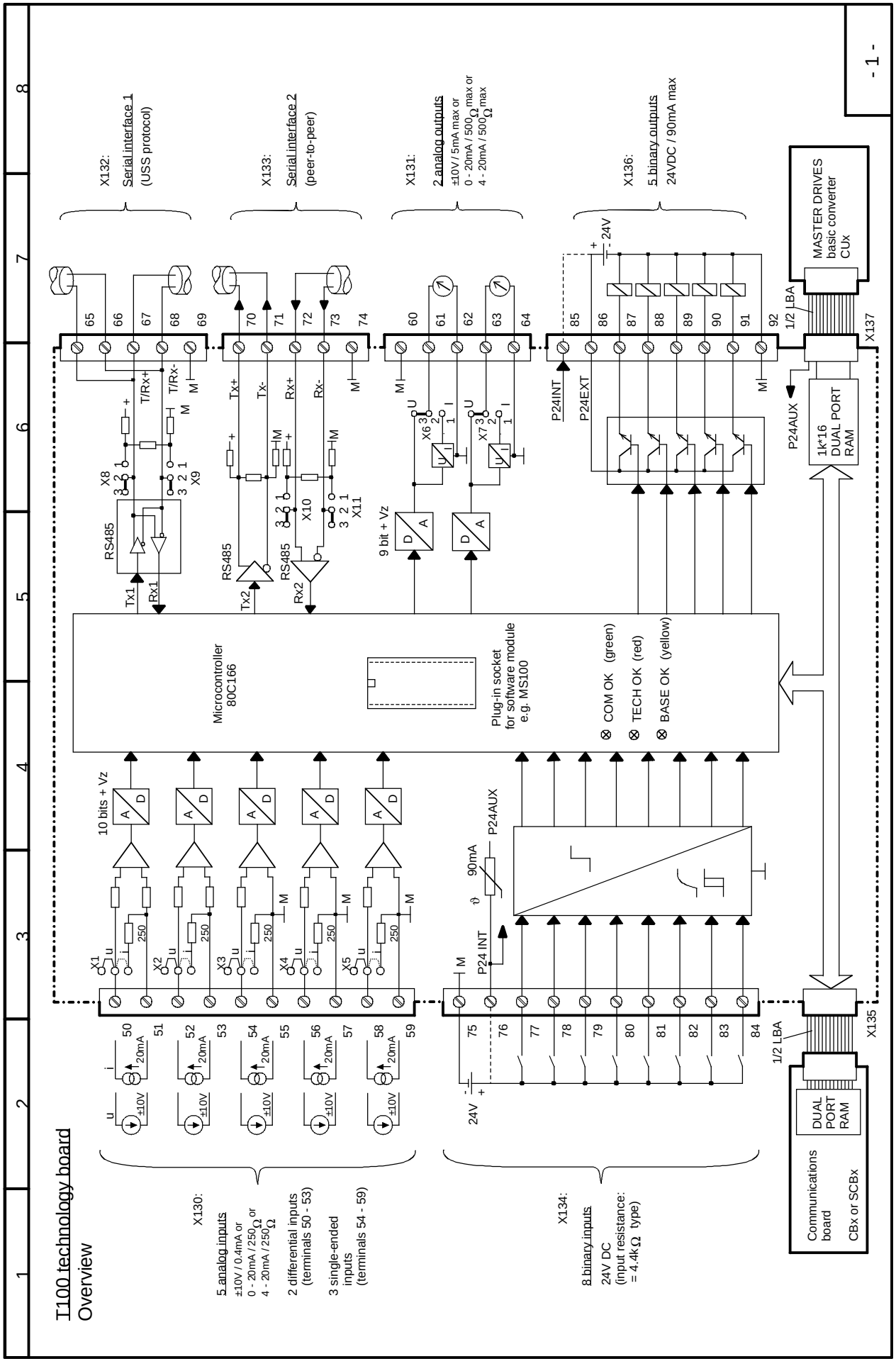
T100 technology board
Overview
- 1 -
X132:
Serial interface 1
(USS protocol)
X133:
Serial interface 2
(peer-to-peer)
X131:
2 analog outputs
±10V / 5mA max or
0 - 20mA / 500Ω max or
4 - 20mA / 500Ω max
X136:
5 binary outputs
24VDC / 90mA max
MASTER DRIVES
basic converter
CUx
X137
1/2 LBA
P24AUX
1k*16
DUAL PORT
RAM
P24INT
P24EXT
24V
T/Rx+
T/Rx-
Tx+
Tx-
Rx+
Rx-
RS485
Tx1
Rx1
Tx2
Rx2
9 bit + Vz
Microcontroller
80C166
Plug-in socket
for software module
e.g. MS100
COM OK (green)
TECH OK (red)
BASE OK (yellow)
10 bits + Vz
90mA
P24 INT
X135
Communications
board
CBx or SCBx
DUAL
PORT
RAM
X130:
5 analog inputs
±10V / 0.4mA or
0 - 20mA / 250Ω or
4 - 20mA / 250Ω
2 differential inputs
(terminals 50 - 53)
3 single-ended
inputs
(terminals 54 - 59)
X134:
8 binary inputs
24V DC
(input resistance:
= 4.4kΩ type)

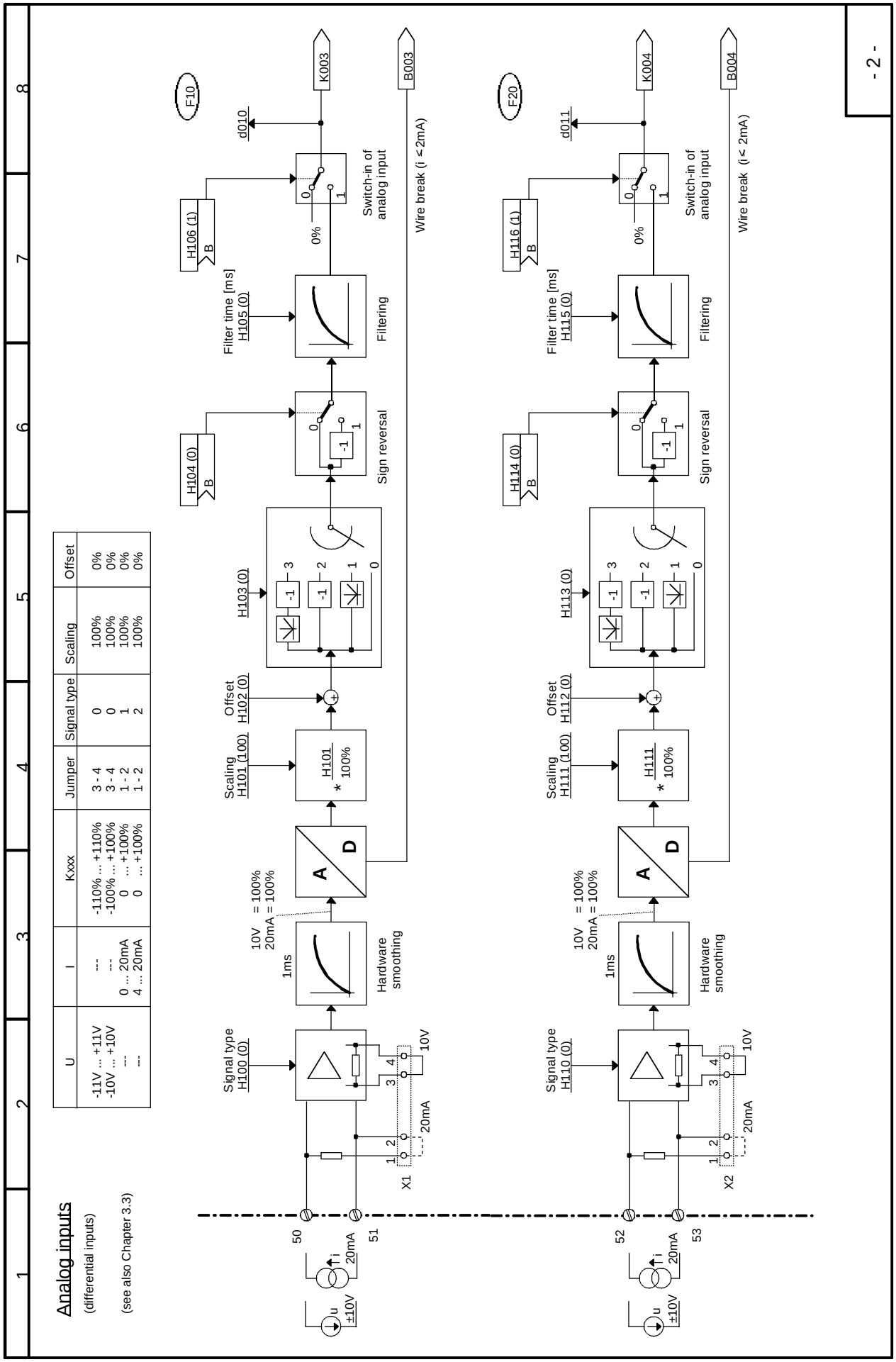
Analog inputs
(differential inputs)
(see also Chapter 3.3)
U
I
Kxxx
Jumper
Signal type
Scaling
Offset
-11V ... +11V
-10V ... +10V

---
0 ... 20mA
4 ... 20mA
-110% ... +110%
-100% ... +100%
0 ... +100%
0 ... +100%
3 - 4
3 - 4
1 - 2
1 - 2
0
0
1
2
100%
100%
100%
100%
0%
0%
0%
0%
- 2 -
F10
F20
K003
K004
B003
B004
d010
d011
H106 (1)
H116 (1)
H104 (0)
H114 (0)
Filter time [ms]
H105 (0)
H115 (0)
Filtering
Switch-in of analog input
Wire break (i < 2mA)
Sign reversal
H103 (0)
H113 (0)
Offset
H102 (0)
H112 (0)
Scaling
H101 (100)
H111 (100)
H101
H111
* 100%
A
D
10V = 100%
20mA = 100%
1ms
Hardware smoothing
Signal type
H100 (0)
H110 (0)
10V
20mA
X1
X2
50
51
52
53
±10V

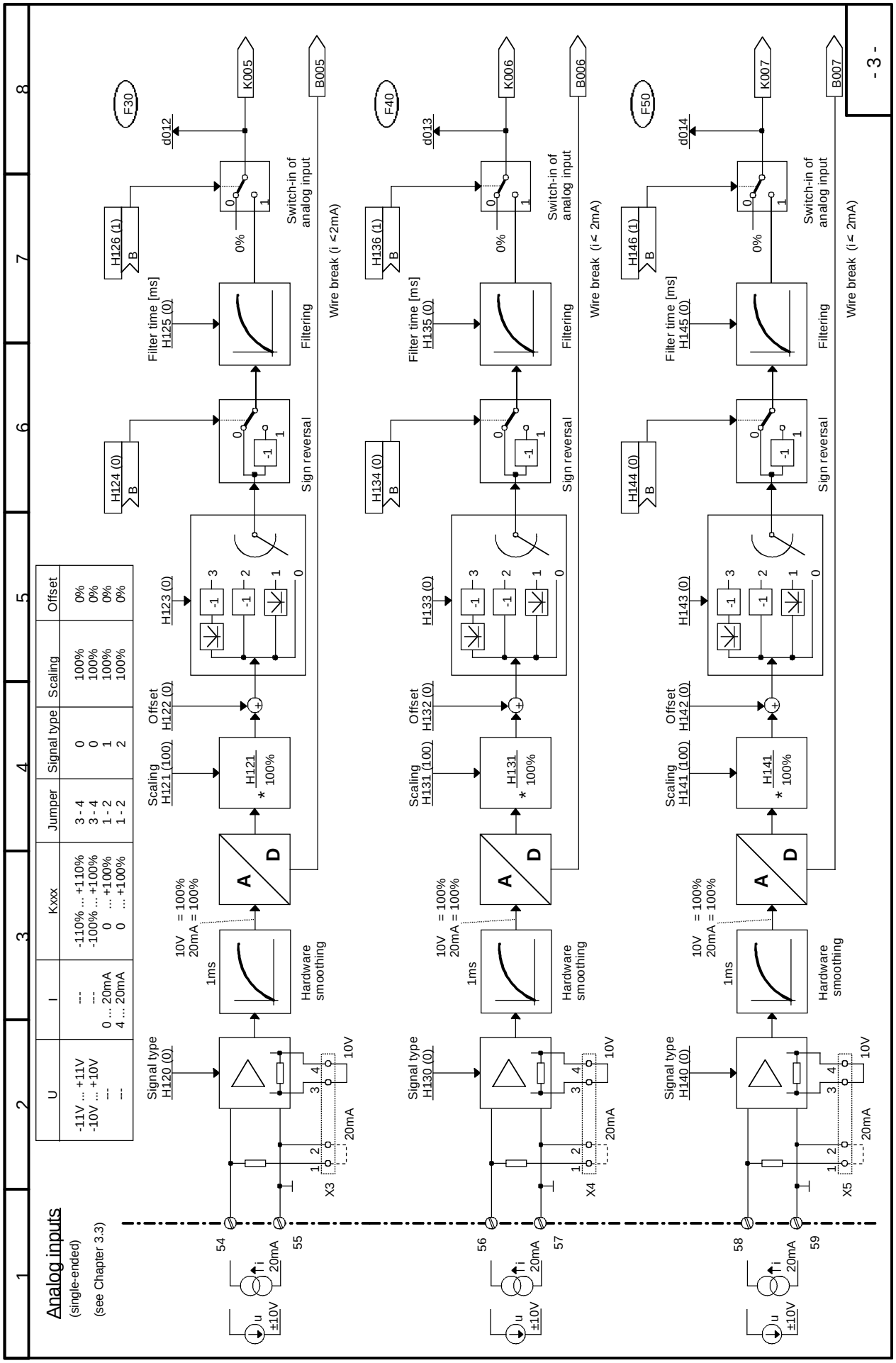
Analog inputs
(single-ended)
(see Chapter 3.3)
U
I
Kxxx
Jumper
Signal type
Scaling
Offset
-11V ... +11V
-10V ... +10V

---
0 ... 20mA
4 ... 20mA
-110% ... +110%
-100% ... +100%
0 ... +100%
0 ... +100%
3 - 4
3 - 4
1 - 2
1 - 2
0
0
1
2
100%
100%
100%
100%
0%
0%
0%
0%
Signal type H120 (0)
Signal type H130 (0)
Signal type H140 (0)
10V = 100%
20mA = 100%
1ms
Hardware smoothing
A
D
Scaling H121 (100)
Scaling H131 (100)
Scaling H141 (100)
H121 * 100%
H131 * 100%
H141 * 100%
Offset H122 (0)
Offset H132 (0)
Offset H142 (0)
H123 (0)
H133 (0)
H143 (0)
H124 (0)
H134 (0)
H144 (0)
Sign reversal
Filtering
Filter time [ms] H125 (0)
Filter time [ms] H135 (0)
Filter time [ms] H145 (0)
H126 (1)
H136 (1)
H146 (1)
Switch-in of analog input
Wire break (i ≤ 2mA)
F30
F40
F50
d012
d013
d014
K005
K006
K007
B005
B006
B007
X3
X4
X5
54
55
56
57
58
59
20mA
±10V
- 3 -

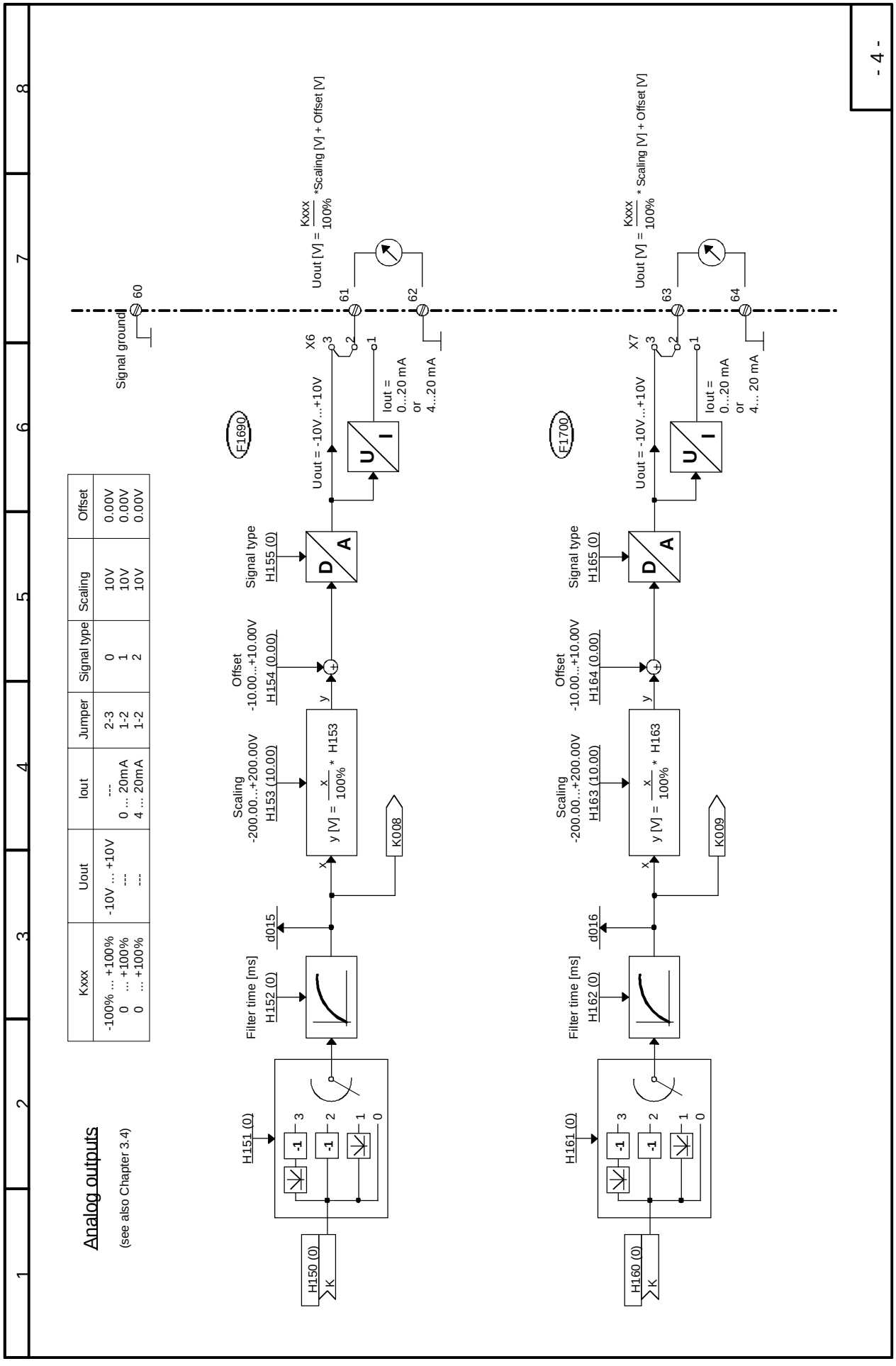
- 4 -
Analog outputs
(see also Chapter 3.4)
Kxxx | Uout | Iout | Jumper | Signal type | Scaling | Offset
-100% ... +100% | -10V ... +10V | --- | 2-3 | 0 | 10V | 0.00V
0 ... +100% | --- | 0 ... 20mA | 1-2 | 1 | 10V | 0.00V
0 ... +100% | --- | 4 ... 20mA | 1-2 | 2 | 10V | 0.00V
Signal ground
60
61
62
63
64
Uout [V] = Kxxx / 100% *Scaling [V] + Offset [V]
Uout [V] = Kxxx / 100% * Scaling [V] + Offset [V]
X6
X7
Uout = -10V...+10V
Iout = 0...20 mA or 4...20 mA
F1690
F1700
H151 (0)
H161 (0)
H150 (0)
H160 (0)
Filter time [ms]
H152 (0)
H162 (0)
d015
d016
Scaling -200.00...+200.00V
H153 (10.00)
H163 (10.00)
y [V] = x / 100% * H153
y [V] = x / 100% * H163
K008
K009
Offset -10.00...+10.00V
H154 (0.00)
H164 (0.00)
Signal type
H155 (0)
H165 (0)
D/A
U/I

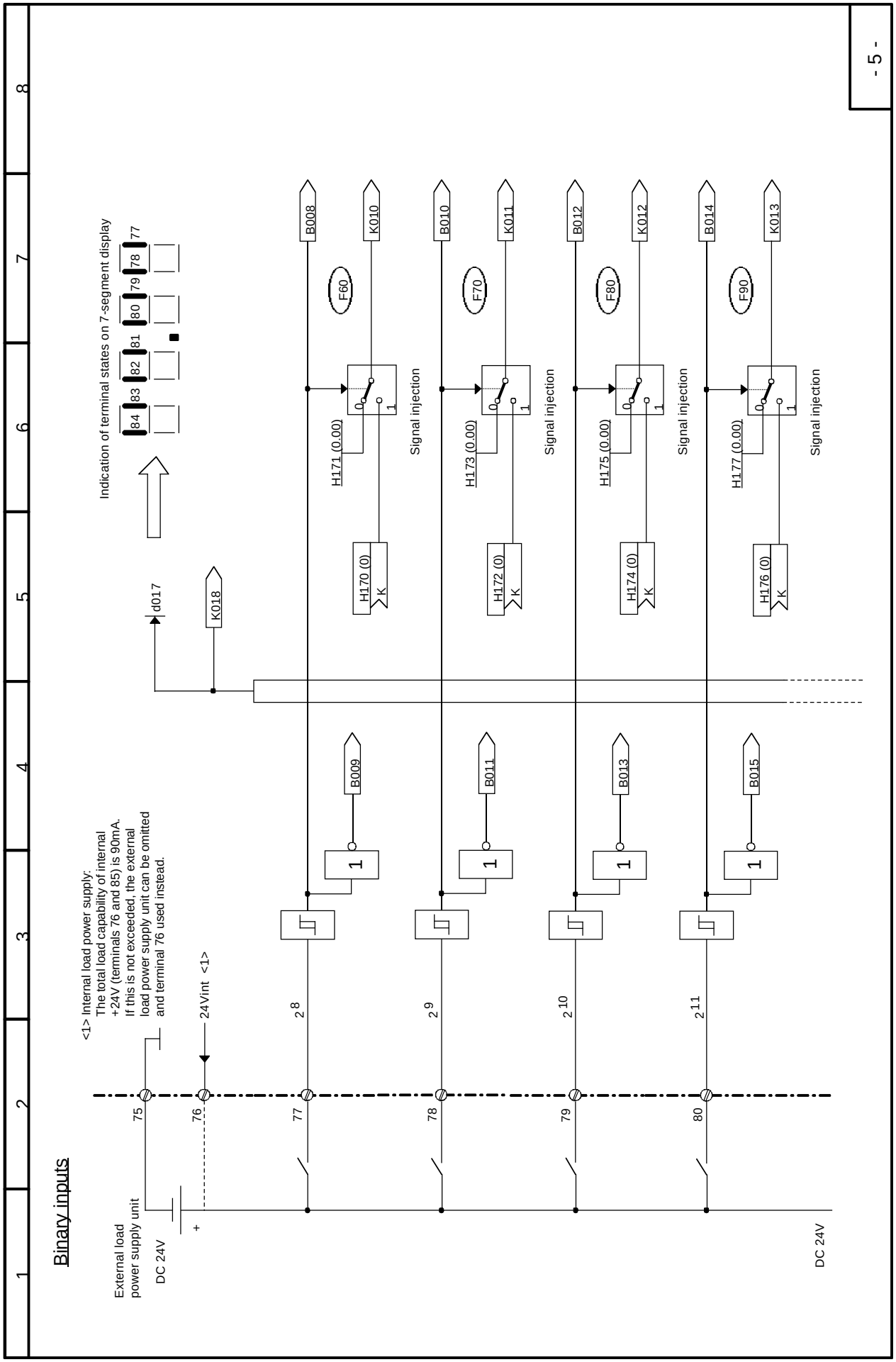
- 5 -
Binary inputs
External load power supply unit
DC 24V
+
75
76
77
78
79
80
<1> Internal load power supply:
The total load capability of internal +24V (terminals 76 and 85) is 90mA. If this is not exceeded, the external load power supply unit can be omitted and terminal 76 used instead.
24Vint <1>
2^8
2^9
2^{10}
2^{11}
B009
B011
B013
B015
B008
B010
B012
B014
K010
K011
K012
K013
F60
F70
F80
F90
H171 (0.00)
H173 (0.00)
H175 (0.00)
H177 (0.00)
H170 (0)
H172 (0)
H174 (0)
H176 (0)
Signal injection
Indication of terminal states on 7-segment display
84 83 82 81 80 79 78 77
d017
K018
DC 24V

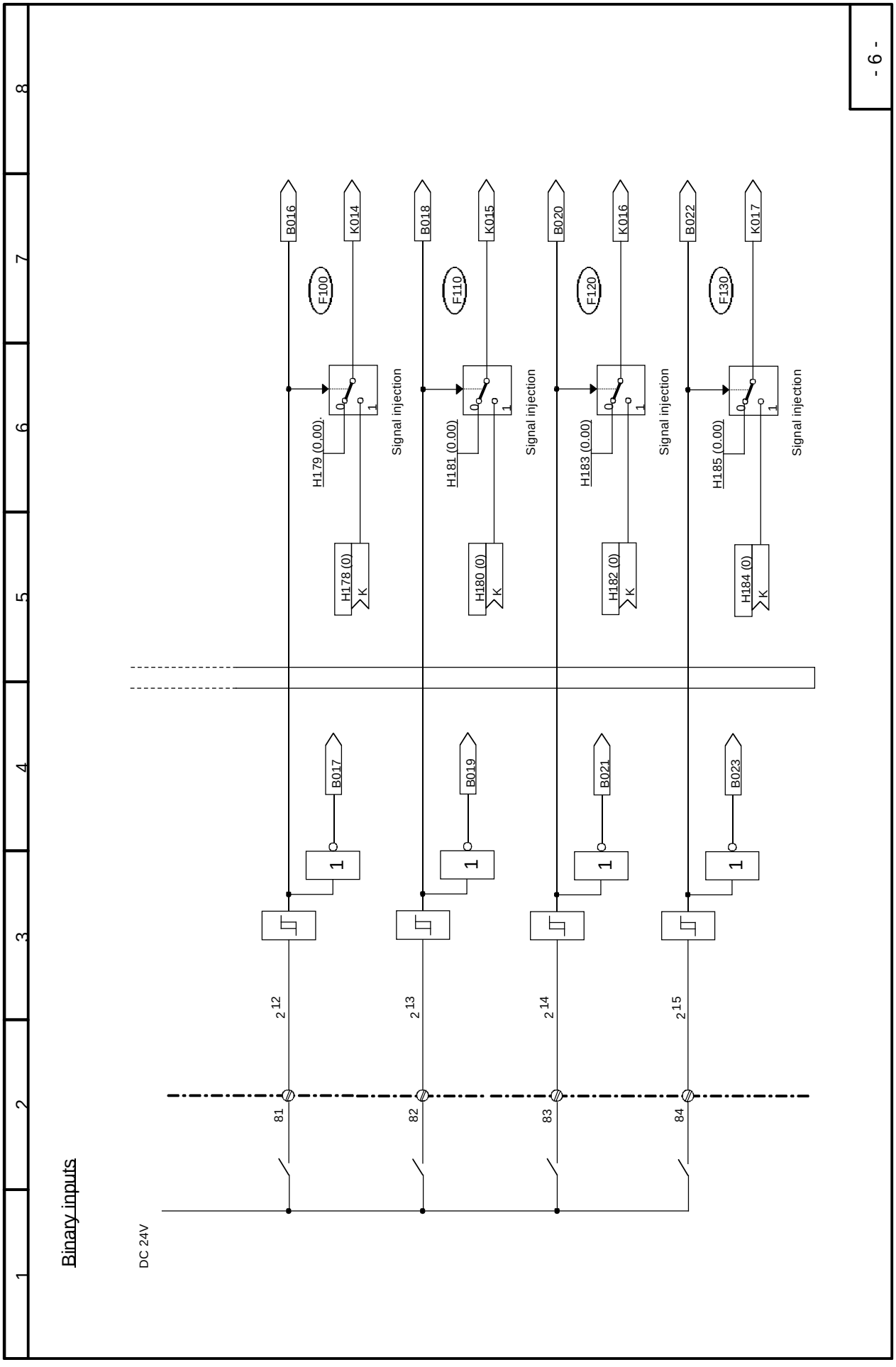
- 6 -
Binary inputs
DC 24V
81
82
83
84
2 12
2 13
2 14
2 15
B016
B017
B018
B019
B020
B021
B022
B023
K014
K015
K016
K017
F100
F110
F120
F130
H179 (0.00)
H181 (0.00)
H183 (0.00)
H185 (0.00)
H178 (0)
H180 (0)
H182 (0)
H184 (0)
Signal injection
Signal injection
Signal injection
Signal injection

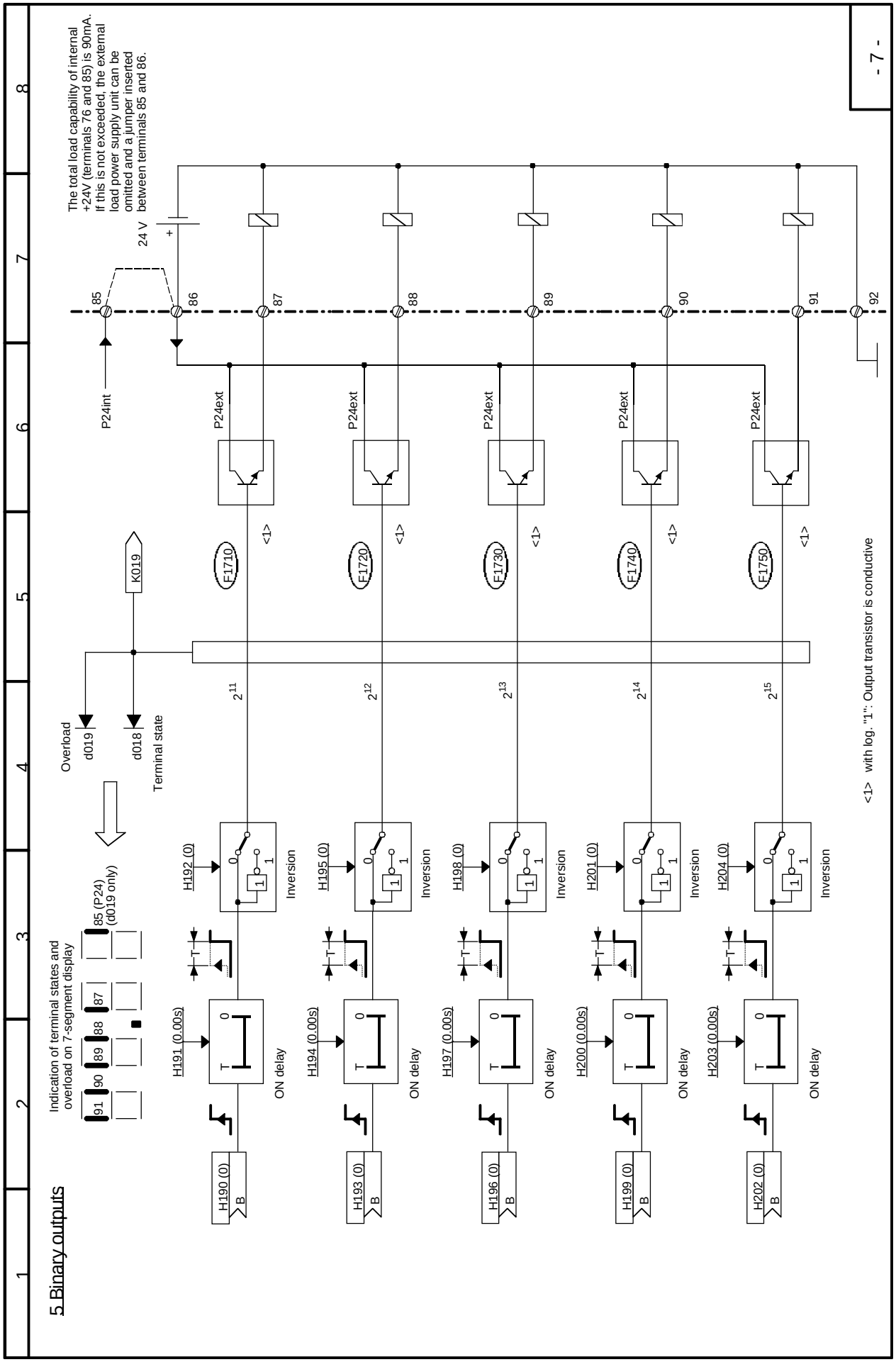
5 Binary outputs
- 7 -
The total load capability of internal +24V (terminals 76 and 85) is 90mA. If this is not exceeded, the external load power supply unit can be omitted and a jumper inserted between terminals 85 and 86.
24 V
+
85
86
87
88
89
90
91
92
P24int
P24ext
K019
F1710
F1720
F1730
F1740
F1750
<1>
Overload
d019
d018
Terminal state
Indication of terminal states and overload on 7-segment display
85 (P24) (d019 only)
91
90
89
88
87
2^{11}
2^{12}
2^{13}
2^{14}
2^{15}
H192 (0)
H195 (0)
H198 (0)
H201 (0)
H204 (0)
Inversion
H191 (0.00s)
H194 (0.00s)
H197 (0.00s)
H200 (0.00s)
H203 (0.00s)
ON delay
H190 (0)
H193 (0)
H196 (0)
H199 (0)
H202 (0)
<1> with log. "1": Output transistor is conductive

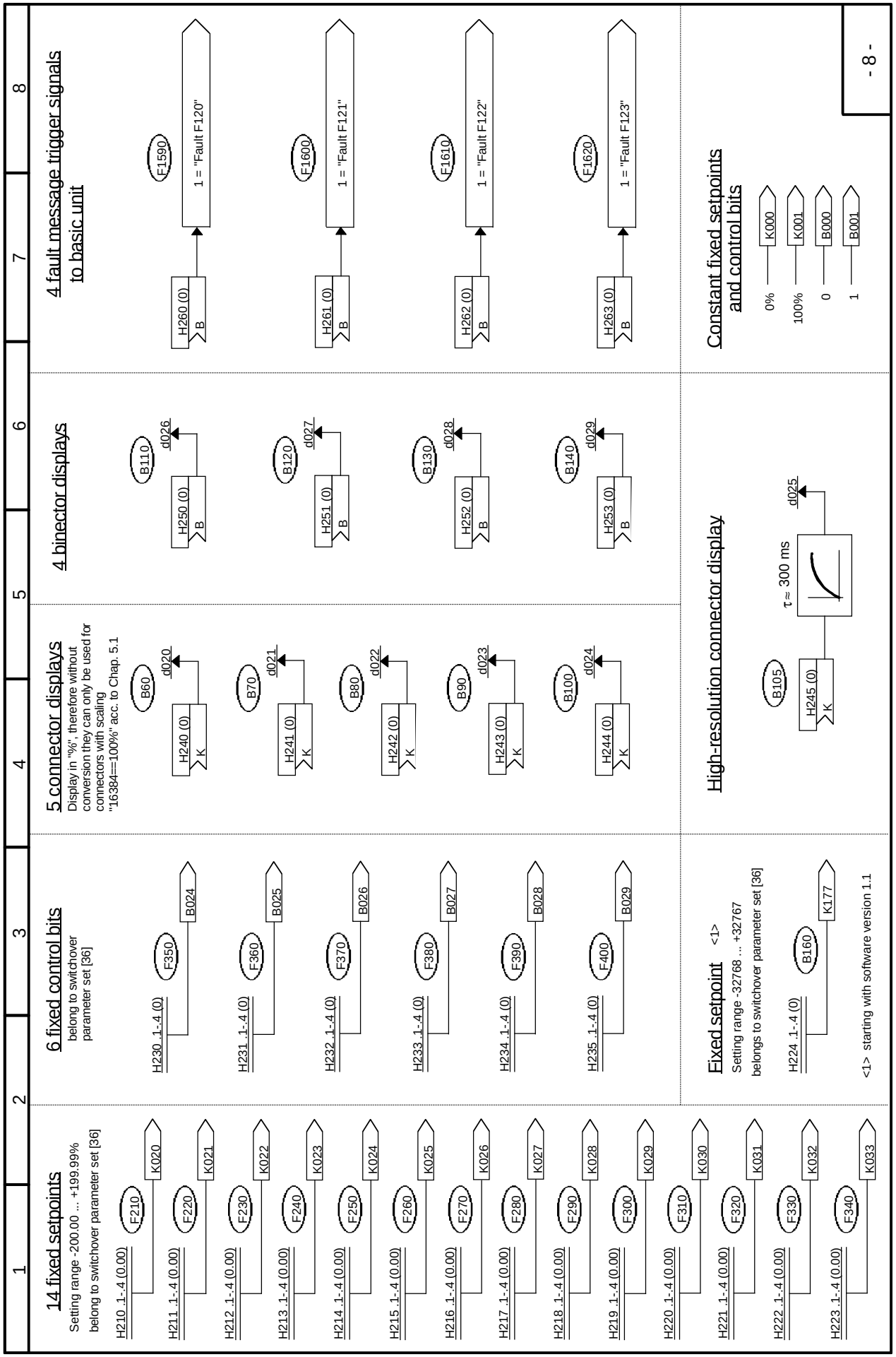
1
2
3
4
5
6
7
8
14 fixed setpoints
Setting range -200.00 ... +199.99%
belong to switchover parameter set [36]
H210 .1-.4 (0.00)
F210
K020
H211 .1-.4 (0.00)
F220
K021
H212 .1-.4 (0.00)
F230
K022
H213 .1-.4 (0.00)
F240
K023
H214 .1-.4 (0.00)
F250
K024
H215 .1-.4 (0.00)
F260
K025
H216 .1-.4 (0.00)
F270
K026
H217 .1-.4 (0.00)
F280
K027
H218 .1-.4 (0.00)
F290
K028
H219 .1-.4 (0.00)
F300
K029
H220 .1-.4 (0.00)
F310
K030
H221 .1-.4 (0.00)
F320
K031
H222 .1-.4 (0.00)
F330
K032
H223 .1-.4 (0.00)
F340
K033
6 fixed control bits
belong to switchover parameter set [36]
H230 .1-.4 (0)
F350
B024
H231 .1-.4 (0)
F360
B025
H232 .1-.4 (0)
F370
B026
H233 .1-.4 (0)
F380
B027
H234 .1-.4 (0)
F390
B028
H235 .1-.4 (0)
F400
B029
Fixed setpoint <1>
Setting range -32768 ... +32767
belongs to switchover parameter set [36]
H224 .1-.4 (0)
B160
K177
<1> starting with software version 1.1
5 connector displays
Display in "%", therefore without conversion they can only be used for connectors with scaling "16384=100%" acc. to Chap. 5.1
B60
d020
H240 (0)
K
B70
d021
H241 (0)
K
B80
d022
H242 (0)
K
B90
d023
H243 (0)
K
B100
d024
H244 (0)
K
High-resolution connector display
B105
H245 (0)
K
τ ≈ 300 ms
d025
4 binector displays
B110
d026
H250 (0)
B
B120
d027
H251 (0)
B
B130
d028
H252 (0)
B
B140
d029
H253 (0)
B
4 fault message trigger signals to basic unit
F1590
1 = "Fault F120"
H260 (0)
B
F1600
1 = "Fault F121"
H261 (0)
B
F1610
1 = "Fault F122"
H262 (0)
B
F1620
1 = "Fault F123"
H263 (0)
B
Constant fixed setpoints and control bits
0%
K000
100%
K001
0
B000
1
B001
- 8 -

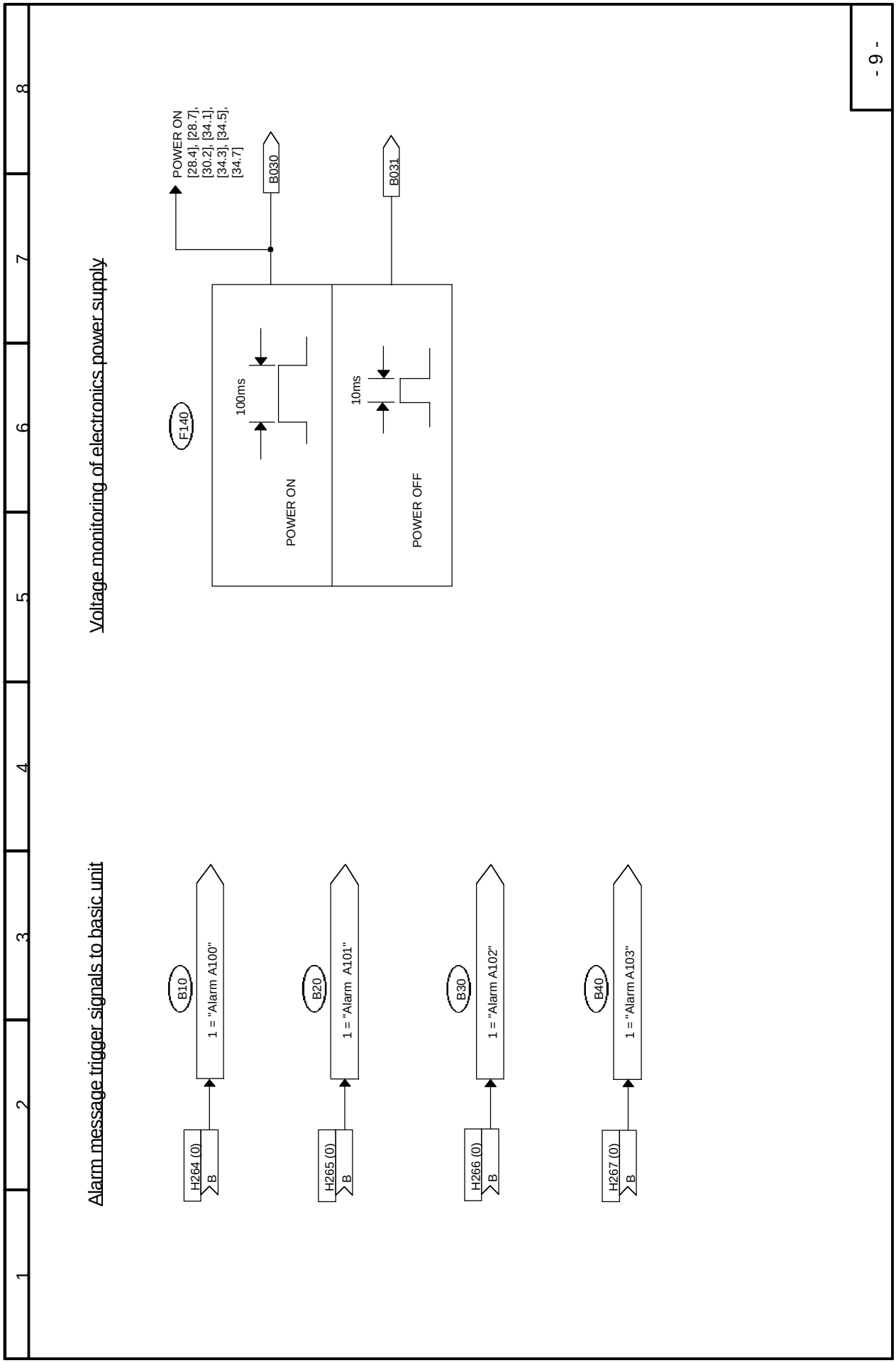
- 9 -
Voltage monitoring of electronics power supply
POWER ON [28.4], [28.7], [30.2], [34.1], [34.3], [34.5], [34.7]
B030
B031
F140
100ms
10ms
POWER ON
POWER OFF
Alarm message trigger signals to basic unit
B10
1 = "Alarm A100"
H264 (0) B
B20
1 = "Alarm A101"
H265 (0) B
B30
1 = "Alarm A102"
H266 (0) B
B40
1 = "Alarm A103"
H267 (0) B

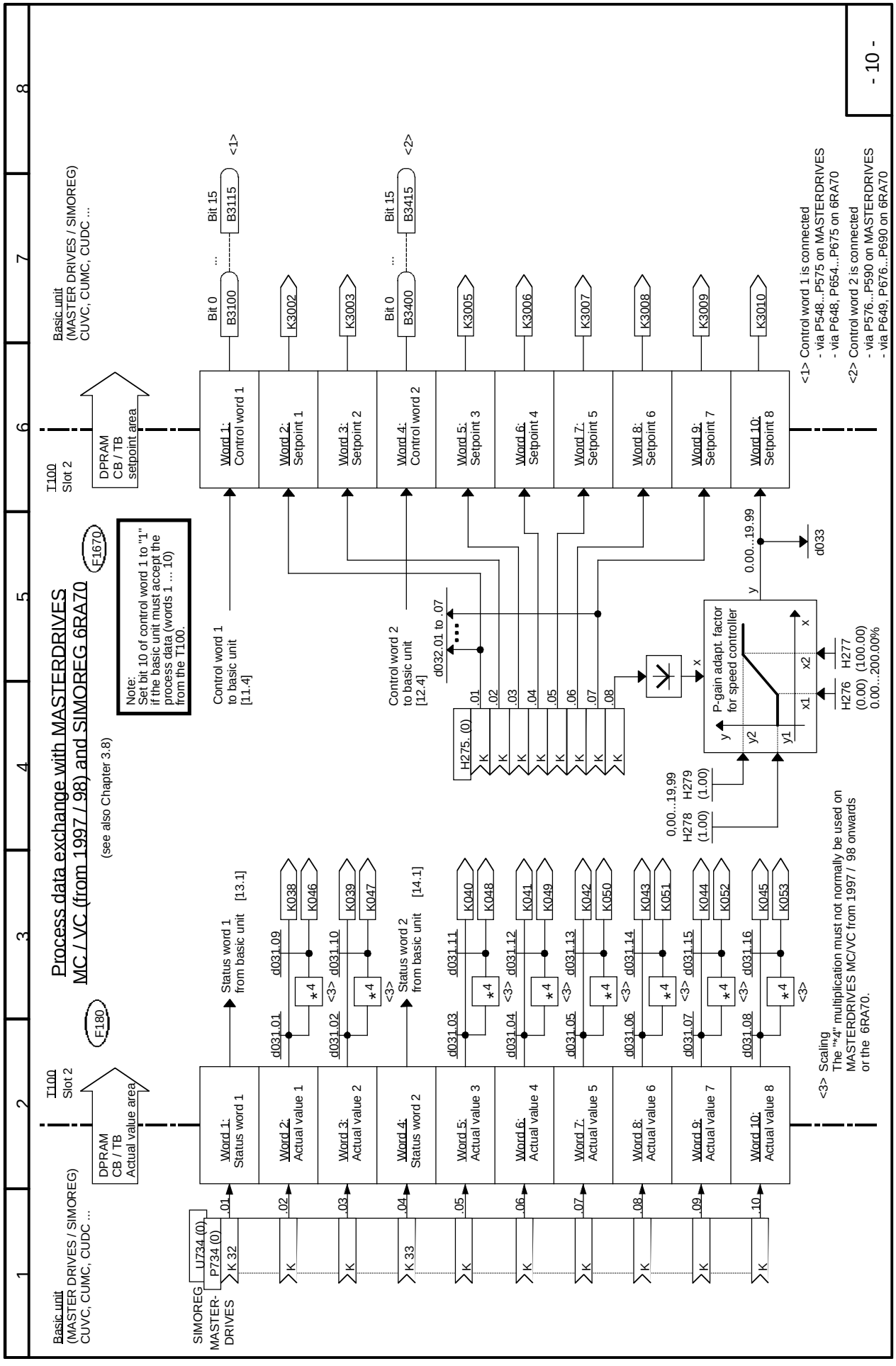
Process data exchange with MASTERDRIVES
MC / VC (from 1997 / 98) and SIMOREG 6RA70
(see also Chapter 3.8)
- 10 -
Basic unit
(MASTER DRIVES / SIMOREG)
CUVC, CUMC, CUDC ...
I100
Slot 2
DPRAM
CB / TB
Actual value area
DPRAM
CB / TB
setpoint area
F180
F1670
Note:
Set bit 10 of control word 1 to "1"
if the basic unit must accept the
process data (words 1 ... 10)
from the T100.
Control word 1
to basic unit
[11.4]
Control word 2
to basic unit
[12.4]
Status word 1
from basic unit [13.1]
Status word 2
from basic unit [14.1]
Word 1: Status word 1
Word 2: Actual value 1
Word 3: Actual value 2
Word 4: Status word 2
Word 5: Actual value 3
Word 6: Actual value 4
Word 7: Actual value 5
Word 8: Actual value 6
Word 9: Actual value 7
Word 10: Actual value 8
Word 1: Control word 1
Word 2: Setpoint 1
Word 3: Setpoint 2
Word 4: Control word 2
Word 5: Setpoint 3
Word 6: Setpoint 4
Word 7: Setpoint 5
Word 8: Setpoint 6
Word 9: Setpoint 7
Word 10: Setpoint 8
Bit 0 ... Bit 15
B3100
B3115
B3400
B3415
K3002
K3003
K3005
K3006
K3007
K3008
K3009
K3010
d031.01
d031.02
d031.03
d031.04
d031.05
d031.06
d031.07
d031.08
d031.09
d031.10
d031.11
d031.12
d031.13
d031.14
d031.15
d031.16
K038
K039
K040
K041
K042
K043
K044
K045
K046
K047
K048
K049
K050
K051
K052
K053
*4
d032.01 to .07
H275 (0)
P-gain adapt. factor
for speed controller
H276
H277
(0.00)
(100.00)
0.00...200.00%
0,00...19,99
H278
(1.00)
H279
(1.00)
0.00...19.99
d033
SIMOREG
MASTER-
DRIVES
U734 (0)
P734 (0)
K 32
K 33
<1> Control word 1 is connected
- via P548...P575 on MASTERDRIVES
- via P648, P654...P675 on 6RA70
<2> Control word 2 is connected
- via P576...P590 on MASTERDRIVES
- via P649, P676...P690 on 6RA70
<3> Scaling
The "*4" multiplication must not normally be used on
MASTERDRIVES MC/VC from 1997 / 98 onwards
or the 6RA70.

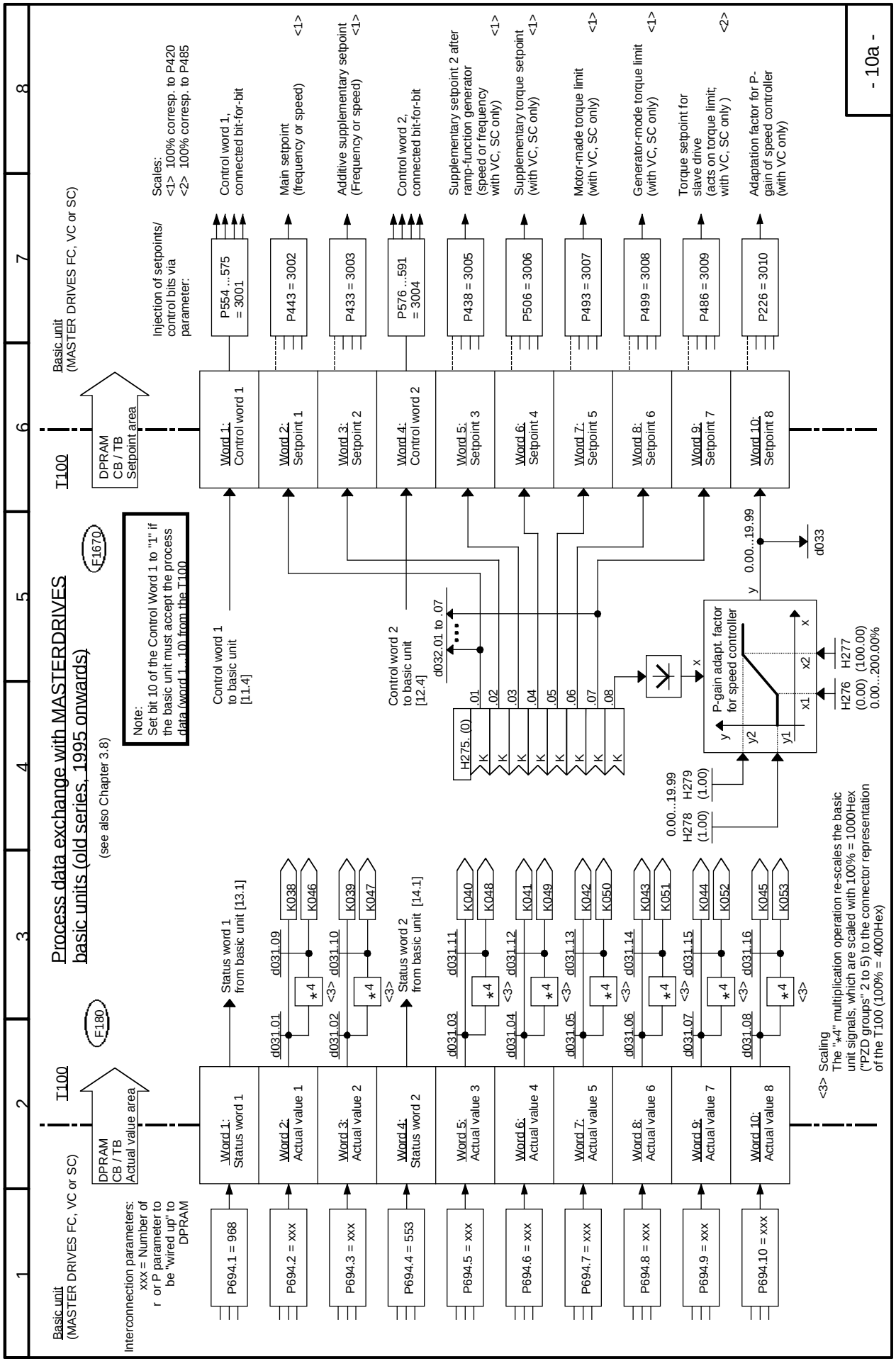
Process data exchange with MASTERDRIVES
basic units (old series, 1995 onwards)
(see also Chapter 3.8)
- 10a -
Basic unit
(MASTER DRIVES FC, VC or SC)
Interconnection parameters:
xxx = Number of
r or P parameter to
be "wired up" to
DPRAM
T100
DPRAM
CB / TB
Actual value area
F180
Word 1: Status word 1
Word 2: Actual value 1
Word 3: Actual value 2
Word 4: Status word 2
Word 5: Actual value 3
Word 6: Actual value 4
Word 7: Actual value 5
Word 8: Actual value 6
Word 9: Actual value 7
Word 10: Actual value 8
P694.1 = 968
P694.2 = xxx
P694.3 = xxx
P694.4 = 553
P694.5 = xxx
P694.6 = xxx
P694.7 = xxx
P694.8 = xxx
P694.9 = xxx
P694.10 = xxx
Status word 1
from basic unit [13.1]
Status word 2
from basic unit [14.1]
d031.01
d031.02
d031.03
d031.04
d031.05
d031.06
d031.07
d031.08
d031.09
d031.10
d031.11
d031.12
d031.13
d031.14
d031.15
d031.16
*4
<3>
K038
K039
K040
K041
K042
K043
K044
K045
K046
K047
K048
K049
K050
K051
K052
K053
<3> Scaling
The "*4" multiplication operation re-scales the basic
unit signals, which are scaled with 100% = 1000Hex
("PZD groups" 2 to 5) to the connector representation
of the T100 (100% = 4000Hex)
Basic unit
(MASTER DRIVES FC, VC or SC)
T100
DPRAM
CB / TB
Setpoint area
F1670
Note:
Set bit 10 of the Control Word 1 to "1" if
the basic unit must accept the process
data (word 1...10) from the T100
Word 1: Control word 1
Word 2: Setpoint 1
Word 3: Setpoint 2
Word 4: Control word 2
Word 5: Setpoint 3
Word 6: Setpoint 4
Word 7: Setpoint 5
Word 8: Setpoint 6
Word 9: Setpoint 7
Word 10: Setpoint 8
Control word 1
to basic unit
[11.4]
Control word 2
to basic unit
[12.4]
d032.01 to .07
.01
.02
.03
.04
.05
.06
.07
.08
H275 (0)
K
P-gain adapt. factor
for speed controller
x
y
y1
y2
x1
x2
H276 (0.00)
H277 (100.00)
0.00...200.00%
0.00...19.99
H278 (1.00)
H279 (1.00)
0.00...19.99
d033
Injection of setpoints/
control bits via
parameter:
P554 ...575
= 3001
P443 = 3002
P433 = 3003
P576 ...591
= 3004
P438 = 3005
P506 = 3006
P493 = 3007
P499 = 3008
P486 = 3009
P226 = 3010
Scales:
<1> 100% corresp. to P420
<2> 100% corresp. to P485
Control word 1,
connected bit-for-bit
Main setpoint
(frequency or speed)
<1>
Additive supplementary setpoint
(Frequency or speed)
<1>
Control word 2,
connected bit-for-bit
Supplementary setpoint 2 after
ramp-function generator
(speed or frequency
with VC, SC only)
<1>
Supplementary torque setpoint
(with VC, SC only)
<1>
Motor-made torque limit
(with VC, SC only)
<1>
Generator-mode torque limit
(with VC, SC only)
<1>
Torque setpoint for
slave drive
(acts on torque limit;
with VC, SC only)
<2>
Adaptation factor for P-
gain of speed controller
(with VC only)

1	2	3	4	5	6	7	8

Control word 1 to basic unit

<1> Bit-for-bit input of control bits via H272 possible only when H272 = 2

<3> Meaning of control bits inSIMOREG: See SIMOREG Operating Instructions

(0) (1) = State of control bits in basic unit control word 1 (r550) required to allow the motor to rotate (for a "normal" application)

(2) = Priority of OFF Bits: OFF2 top priority, OFF3 medium priority, OFF1 lowest priority

F1660

Selection of control word

H270 (2)

K

Selection of control bits <1>

H272 (0)

B .01 … B .16

<2>

Control bit 10 must be selected with "1" (e.g. by setting H272.11=1) if setpoints of control commands are to be sent to the basic unit via the T100 software, via a serial interface of the T100 or via communications board!

Bit No.	Available in Master Drives FC	VC	SC/ MC	Meaning of control bits from DPRAM ⇨basic converter on MASTERDRIVES <3> A control bit takes effect in the basic unit only if it is connected to DPRAM word 1 via P554 - P575 = 31xx	Connection of control bit on MASTERDRIVES via ("/" = "or")	Connection of control bit on SIMOREG via ("/" = "or")
Bit 0 (1)	x	x	x	0 = **Ramp stop** (OFF1): Shutdown of drive via ramp-function generator followed by pulse disable and main contactor OPEN (if installed) (2)	P554	P654
Bit 1 (1)	x	x	x	0 = **Electrical OFF** (OFF2: Pulse diable, main contactor OPEN motor coasts to standstill) (2)	P555 / P556 / P557	P655 / P656 / P657
Bit 2 (1)	x	x	x	0 = **Fast stop** (OFF3: Braking via DC braking function or fast stop ramp followed, by pulse disable and main contactor OPEN (if installed)) (2)	P558 / P559 / P560	P658 / P659 / P660
Bit 3 (1)	x	x	x	1 = **Inverter enable** / 0 = inverter disable (pulse disable and main contactor open (if installed))	P561	P661
Bit 4 (1)	x	x	x	0 = **Set ramp generator output 0** (RFG-output=0) / 1 = Enable ramp function generator	P562	P662
Bit 5 (1)	x	x	x	0 = **Stop ramp function generator** (output frozen at instantaneous value) / 1 = Start ramp function generator	P563	P663
Bit 6 (1)	x	x	x	1 = **Enable setpoint for ramp-function generat.** / 0 = Disable setp. forRFG (0 output)	P564	P664
Bit 7 (0)	x	x	x	0 ⇨1 edge = **fault acknowledgement**	P565 / P566 / P567	P665 / P666 / P667
Bit 8 (0)	x	x	x	1 = **INCHING 1** (includes OFF1 = 1 command see bit 0) or INCHING bit 0	P568	P668
Bit 9 (0)	_	x	x	1 = **INCHING 2** (includes OFF1 = 1 command, see bit 0) or INCHING bit 1	P569	P669
Bit 10 (1)	x	x	x	1 = **Control requested** (setpoints and control commands from e.g. communications/technology board are accepted, has no effect on parameter transfer) / 0 = No setpoint control	always connected if T100 installed	always connected if T100 installed
Bit 11 (1)	x	x	x	1 = Clockwise phase sequence (whenbit 11 = 1 and bit 12 = 1 the direction of rotation is determined by the setpoint sign)	P571	P671
Bit 12 (1)	x	x	x	1 = **Counter-clockwise phase sequence** (when Bit 11 = 0 and Bit 12 = 0 setpoint 0 is input ⇨ allows fail-safe input of rotational direction)	P572	P672
Bit 13 (0)	x	x	x	1 = **Raise mot. potentiometer**	P573	P673
Bit 14 (0)	x	x	x	1 = **Lower mot. potentiometer**	P574	P674
Bit 15 (0)	x	x	x	0 = **External fault 1** (F035)	P575	P675

Display of control bits on the 7-segment display:

15 14 13 12 11 10 9 8

7 6 5 4 3 2 1 0

d030.03

K036

Control word 1 to basic unit [10.5] [10a.5]

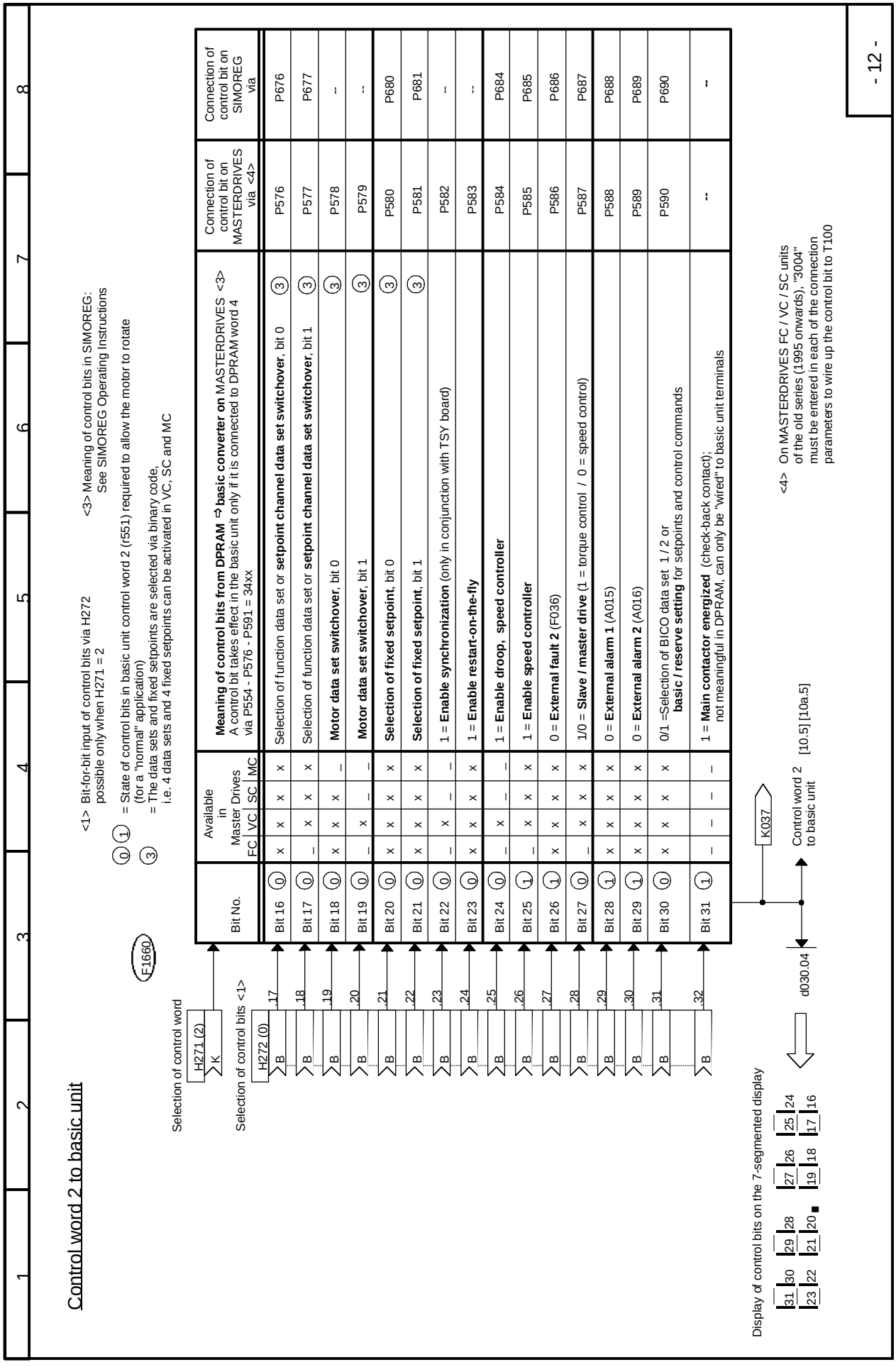
Control word 2 to basic unit
<1> Bit-for-bit input of control bits via H272 possible only when H271 = 2
0 1 = State of control bits in basic unit control word 2 (r551) required to allow the motor to rotate (for a "normal" application)
3 = The data sets and fixed setpoints are selected via binary code, i.e. 4 data sets and 4 fixed setpoints can be activated in VC, SC and MC
<3> Meaning of control bits in SIMOREG: See SIMOREG Operating Instructions
F1660
Selection of control word
H271 (2)
Selection of control bits <1>
H272 (0)
Bit No.
Available in Master Drives FC VC SC MC
Meaning of control bits from DPRAM ⇨ basic converter on MASTERDRIVES <3> A control bit takes effect in the basic unit only if it is connected to DPRAM word 4 via P554 - P576 - P591 = 34xx
Connection of control bit on MASTERDRIVES via <4>
Connection of control bit on SIMOREG via
Bit 16 0 x x x x Selection of function data set or setpoint channel data set switchover, bit 0 3 P576 P676
Bit 17 0 – x x x Selection of function data set or setpoint channel data set switchover, bit 1 3 P577 P677
Bit 18 0 x x x – Motor data set switchover, bit 0 3 P578 --
Bit 19 0 – x – – Motor data set switchover, bit 1 3 P579 --
Bit 20 0 x x x x Selection of fixed setpoint, bit 0 3 P580 P680
Bit 21 0 x x x x Selection of fixed setpoint, bit 1 3 P581 P681
Bit 22 0 – x – – 1 = Enable synchronization (only in conjunction with TSY board) P582 --
Bit 23 0 x x x x 1 = Enable restart-on-the-fly P583 --
Bit 24 0 – x – – 1 = Enable droop, speed controller P584 P684
Bit 25 1 – x x x 1 = Enable speed controller P585 P685
Bit 26 1 x x x x 0 = External fault 2 (F036) P586 P686
Bit 27 0 – x x x 1/0 = Slave / master drive (1 = torque control / 0 = speed control) P587 P687
Bit 28 1 x x x x 0 = External alarm 1 (A015) P588 P688
Bit 29 1 x x x x 0 = External alarm 2 (A016) P589 P689
Bit 30 0 x x x x 0/1 =Selection of BICO data set 1 / 2 or basic / reserve setting for setpoints and control commands P590 P690
Bit 31 1 – – – – 1 = Main contactor energized (check-back contact); not meaningful in DPRAM, can only be "wired" to basic unit terminals -- --
K037
Control word 2 to basic unit
d030.04
[10.5] [10a.5]
<4> On MASTERDRIVES FC / VC / SC units of the old series (1995 onwards), "3004" must be entered in each of the connection parameters to wire up the control bit to T100
Display of control bits on the 7-segmented display
31 30 29 28 27 26 25 24
23 22 21 20 19 18 17 16
- 12 -

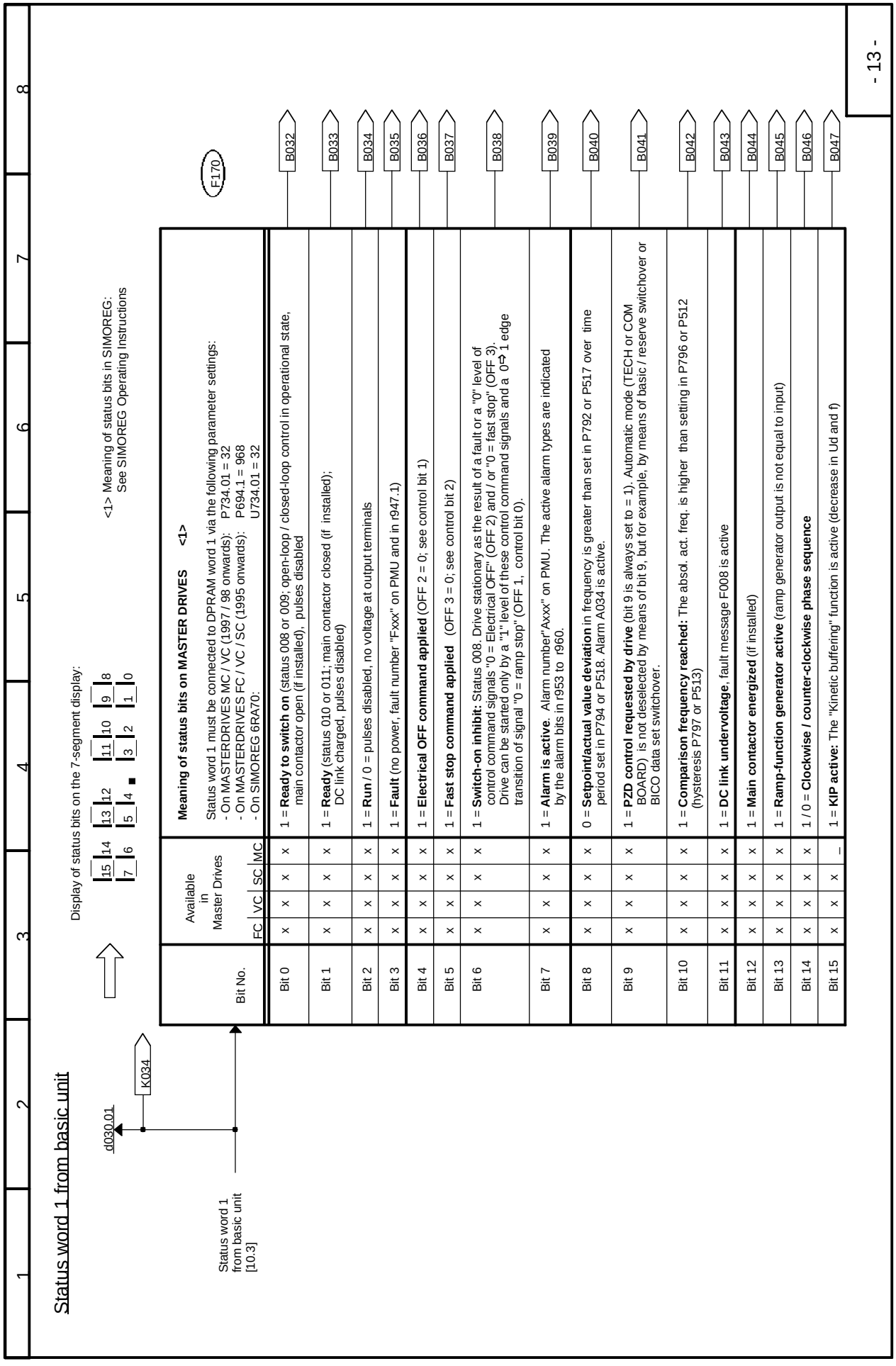

Bit No.	Available in Master Drives FC	VC	SC	MC	Meaning of status bits on MASTER DRIVES <1> Status word 1 must be connected to DPRAM word 1 via the following parameter settings: - On MASTERDRIVES MC / VC (1997 / 98 onwards): P734.01 = 32 - On MASTERDRIVES FC / VC / SC (1995 onwards): P694.1 = 968 - On SIMOREG 6RA70: U734.01 = 32	
Bit 0	x	x	x	x	1 = **Ready to switch on** (status 008 or 009; open-loop / closed-loop control in operational state, main contactor open (if installed), pulses disabled	B032
Bit 1	x	x	x	x	1 = **Ready** (status 010 or 011; main contactor closed (if installed); DC link charged, pulses disabled)	B033
Bit 2	x	x	x	x	1 = **Run** / 0 = pulses disabled, no voltage at output terminals	B034
Bit 3	x	x	x	x	1 = **Fault** (no power, fault number "Fxxx" on PMU and in r947.1)	B035
Bit 4	x	x	x	x	1 = **Electrical OFF command applied** (OFF 2 = 0; see control bit 1)	B036
Bit 5	x	x	x	x	1 = **Fast stop command applied** (OFF 3 = 0; see control bit 2)	B037
Bit 6	x	x	x	x	1 = **Switch-on inhibit:** Status 008. Drive stationary as the result of a fault or a "0" level of control command signals "0 = Electrical OFF" (OFF 2) and / or "0 = fast stop" (OFF 3). Drive can be started only by a "1" level of these control command signals and a 0⇒1 edge transition of signal "0 = ramp stop" (OFF 1, control bit 0).	B038
Bit 7	x	x	x	x	1 = **Alarm is active**. Alarm number"Axxx" on PMU. The active alarm types are indicated by the alarm bits in r953 to r960.	B039
Bit 8	x	x	x	x	0 = **Setpoint/actual value deviation** in frequency is greater than set in P792 or P517 over time period set in P794 or P518. Alarm A034 is active.	B040
Bit 9	x	x	x	x	1 = **PZD control requested by drive** (bit 9 is always set to = 1). Automatic mode (TECH or COM BOARD) is not deselected by means of bit 9, but for example, by means of basic / reserve switchover or BICO data set switchover.	B041
Bit 10	x	x	x	x	1 = **Comparison frequency reached:** The absol. act. freq. is higher than setting in P796 or P512 (hysteresis P797 or P513)	B042
Bit 11	x	x	x	x	1 = **DC link undervoltage**, fault message F008 is active	B043
Bit 12	x	x	x	x	1 = **Main contactor energized** (if installed)	B044
Bit 13	x	x	x	x	1 = **Ramp-function generator active** (ramp generator output is not equal to input)	B045
Bit 14	x	x	x	x	1 / 0 = **Clockwise / counter-clockwise phase sequence**	B046
Bit 15	x	x	x	_	1 = **KIP active:** The "Kinetic buffering" function is active (decrease in Ud and f)	B047

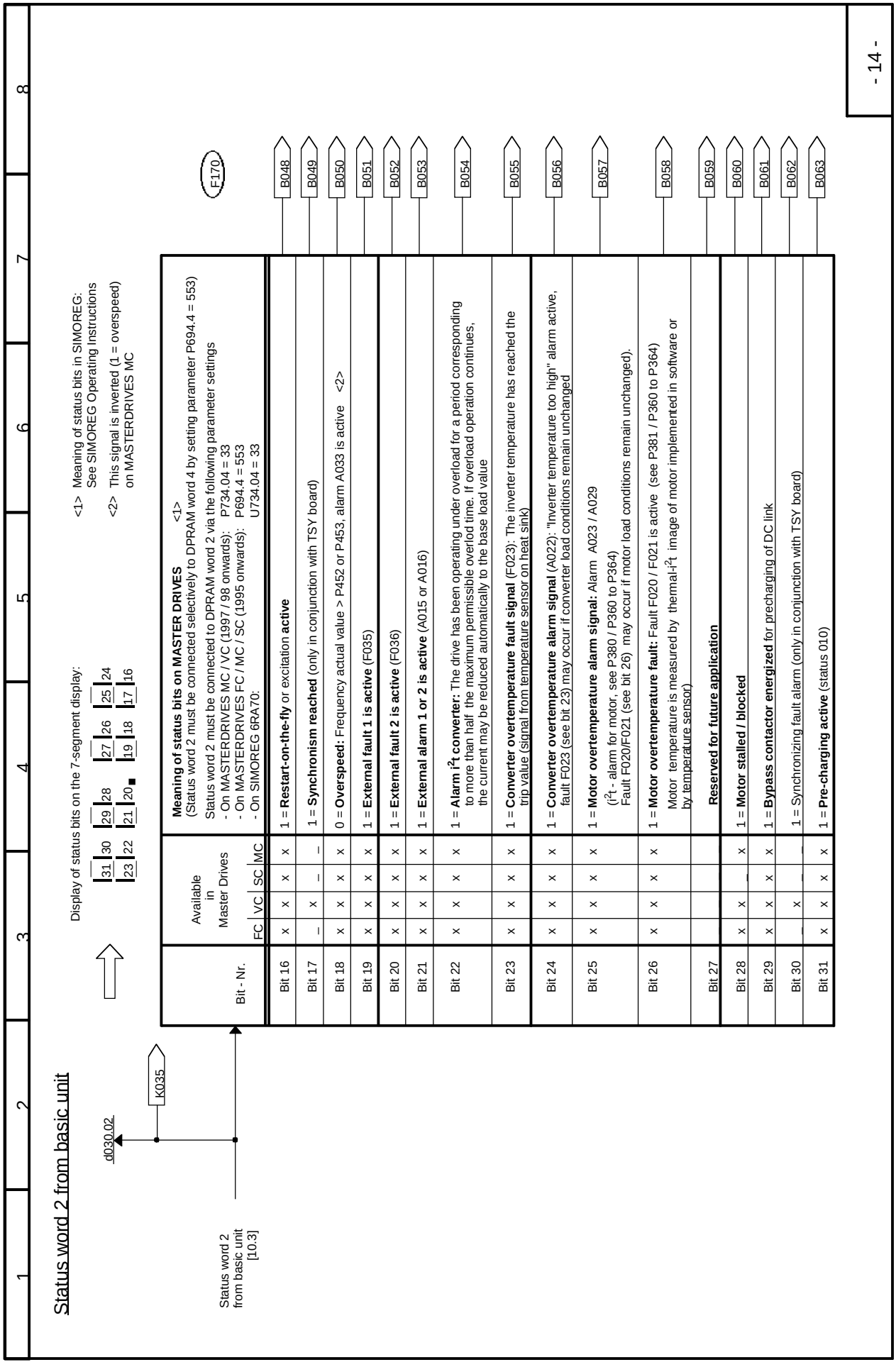
Status word 2 from basic unit
d030.02
K035
Status word 2 from basic unit [10.3]
Display of status bits on the 7-segment display:
31 30 29 28 27 26 25 24
23 22 21 20 19 18 17 16
<1> Meaning of status bits in SIMOREG: See SIMOREG Operating Instructions
<2> This signal is inverted (1 = overspeed) on MASTERDRIVES MC
Meaning of status bits on MASTER DRIVES <1>
(Status word 2 must be connected selectively to DPRAM word 4 by setting parameter P694.4 = 553)
Status word 2 must be connected to DPRAM word 2 via the following parameter settings
- On MASTERDRIVES MC / VC (1997 / 98 onwards): P734.04 = 33
- On MASTERDRIVES FC / MC / SC (1995 onwards): P694.4 = 553
- On SIMOREG 6RA70: U734.04 = 33
Available in Master Drives
Bit - Nr. FC VC SC MC
Bit 16 x x x x 1 = Restart-on-the-fly or excitation active B048
Bit 17 – x – – 1 = Synchronism reached (only in conjunction with TSY board) B049
Bit 18 x x x x 0 = Overspeed: Frequency actual value > P452 or P453, alarm A033 is active <2> B050
Bit 19 x x x x 1 = External fault 1 is active (F035) B051
Bit 20 x x x x 1 = External fault 2 is active (F036) B052
Bit 21 x x x x 1 = External alarm 1 or 2 is active (A015 or A016) B053
Bit 22 x x x x 1 = Alarm i²t converter: The drive has been operating under overload for a period corresponding to more than half the maximum permissible overlod time. If overload operation continues, the current may be reduced automatically to the base load value B054
Bit 23 x x x x 1 = Converter overtemperature fault signal (F023): The inverter temperature has reached the trip value (signal from temperature sensor on heat sink) B055
Bit 24 x x x x 1 = Converter overtemperature alarm signal (A022): "Inverter temperature too high" alarm active, fault F023 (see bit 23) may occur if converter load conditions remain unchanged B056
Bit 25 x x x x 1 = Motor overtemperature alarm signal: Alarm A023 / A029 (i²t - alarm for motor, see P380 / P360 to P364) Fault F020/F021 (see bit 26) may occur if motor load conditions remain unchanged). B057
Bit 26 x x x x 1 = Motor overtemperature fault: Fault F020 / F021 is active (see P381 / P360 to P364) Motor temperature is measured by thermal-i²t image of motor implemented in software or by temperature sensor) B058
Bit 27 Reserved for future application B059
Bit 28 x x _ x 1 = Motor stalled / blocked B060
Bit 29 x x x x 1 = Bypass contactor energized for precharging of DC link B061
Bit 30 _ x _ _ 1 = Synchronizing fault alarm (only in conjunction with TSY board) B062
Bit 31 x x x x 1 = Pre-charging active (status 010) B063
F170
- 14 -

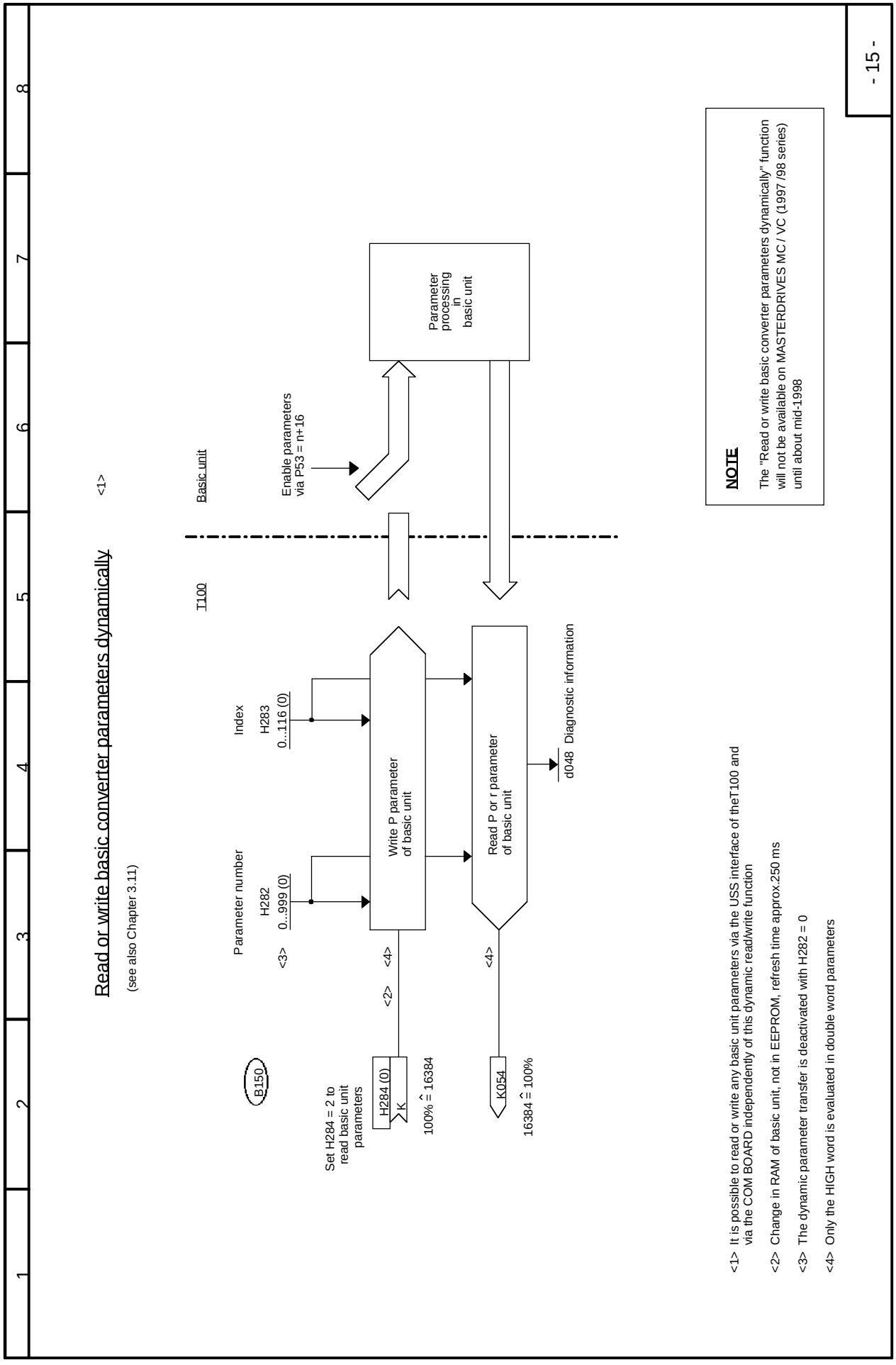
Read or write basic converter parameters dynamically
(see also Chapter 3.11)
<1>
Basic unit
T100
Enable parameters via P53 = n+16
Parameter processing in basic unit
Parameter number
H282
0...999 (0)
<3>
Index
H283
0...116 (0)
Write P parameter of basic unit
Read P or r parameter of basic unit
d048 Diagnostic information
B150
Set H284 = 2 to read basic unit parameters
H284 (0)
K
<2>
<4>
100% ≙ 16384
K054
16384 ≙ 100%
NOTE
The "Read or write basic converter parameters dynamically" function will not be available on MASTERDRIVES MC / VC (1997 /98 series) until about mid-1998
<1> It is possible to read or write any basic unit parameters via the USS interface of theT100 and via the COM BOARD independently of this dynamic read/write function
<2> Change in RAM of basic unit, not in EEPROM, refresh time approx.250 ms
<3> The dynamic parameter transfer is deactivated with H282 = 0
<4> Only the HIGH word is evaluated in double word parameters
- 15 -

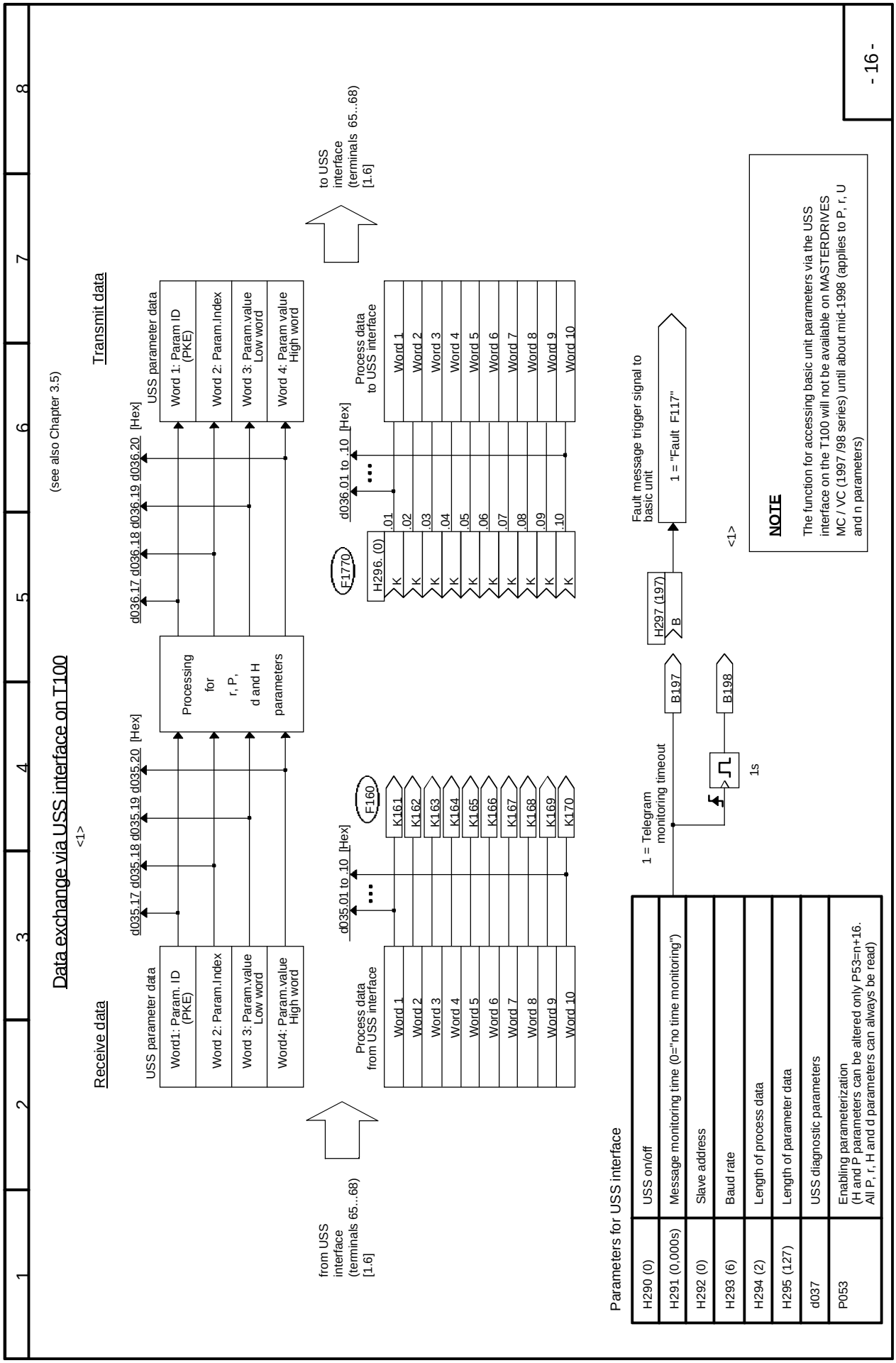
Data exchange via USS interface on T100
(see also Chapter 3.5)
Receive data
Transmit data
<1>
USS parameter data
Word1: Param. ID (PKE)
Word 2: Param.Index
Word 3: Param.value Low word
Word4: Param.value High word
d035.17 d035.18 d035.19 d035.20 [Hex]
Processing for r, P, d and H parameters
d036.17 d036.18 d036.19 d036.20 [Hex]
USS parameter data
Word 1: Param ID (PKE)
Word 2: Param.Index
Word 3: Param.value Low word
Word 4: Param.value High word
from USS interface (terminals 65...68) [1.6]
to USS interface (terminals 65...68) [1.6]
Process data from USS interface
d035.01 to .10 [Hex]
F160
K161
K162
K163
K164
K165
K166
K167
K168
K169
K170
Word 1
Word 2
Word 3
Word 4
Word 5
Word 6
Word 7
Word 8
Word 9
Word 10
Process data to USS interface
d036.01 to .10 [Hex]
F170
H296. (0)
.01
.02
.03
.04
.05
.06
.07
.08
.09
.10
K
1 = Telegram monitoring timeout
B197
B198
1s
H297 (197)
B
Fault message trigger signal to basic unit
1 = "Fault F117"
<1>
NOTE
The function for accessing basic unit parameters via the USS interface on the T100 will not be available on MASTERDRIVES MC / VC (1997 /98 series) until about mid-1998 (applies to P, r, U and n parameters)
Parameters for USS interface
H290 (0) USS on/off
H291 (0,000s) Message monitoring time (0="no time monitoring")
H292 (0) Slave address
H293 (6) Baud rate
H294 (2) Length of process data
H295 (127) Length of parameter data
d037 USS diagnostic parameters
P053 Enabling parameterization (H and P parameters can be altered only P53=n+16. All P, r, H and d parameters can always be read)
1 2 3 4 5 6 7 8
- 16 -

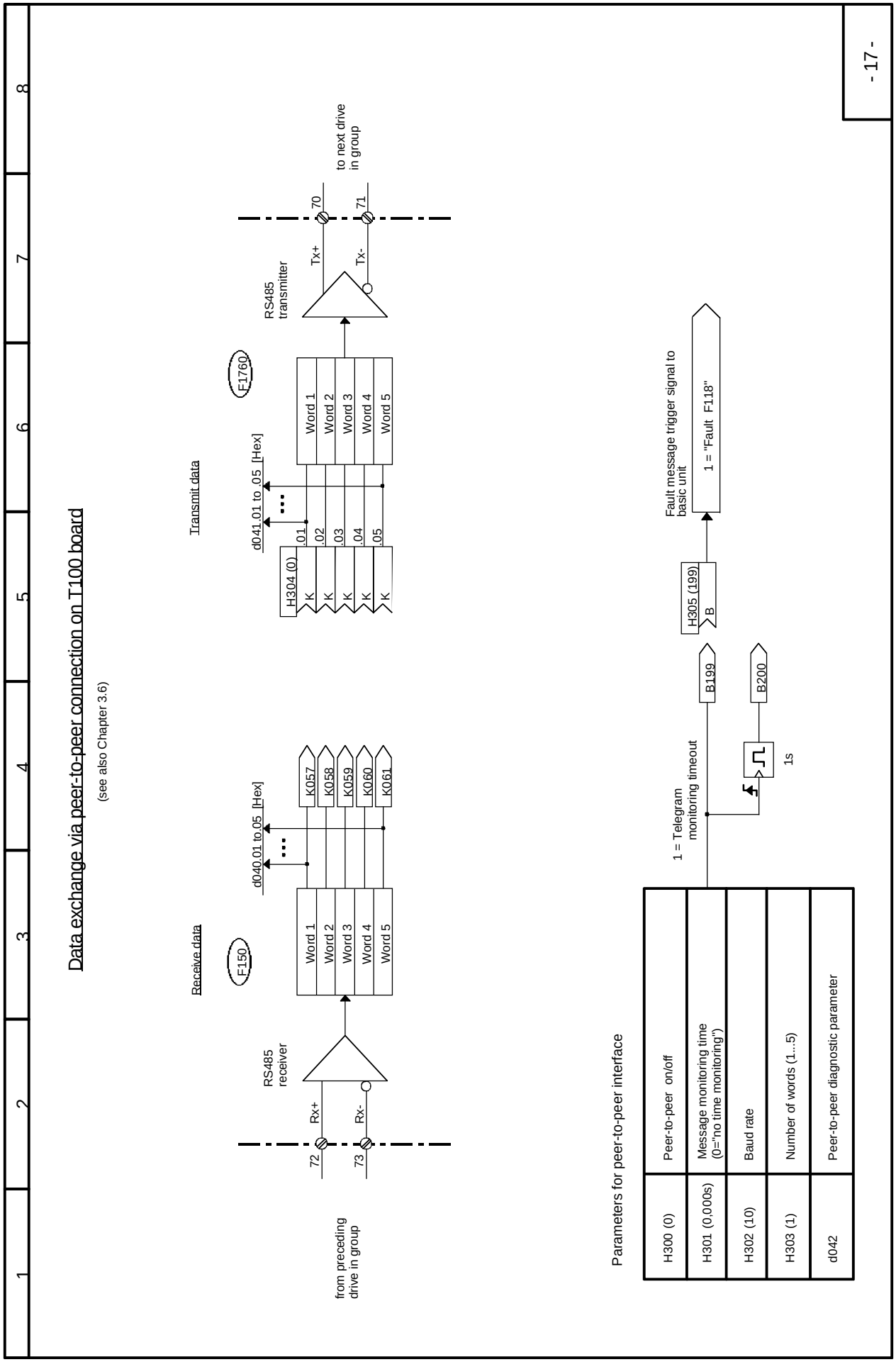
Data exchange via peer-to-peer connection on T100 board
(see also Chapter 3.6)
Receive data
F150
Word 1
Word 2
Word 3
Word 4
Word 5
d040.01 to .05 [Hex]
K057
K058
K059
K060
K061
RS485 receiver
Rx+
Rx-
72
73
from preceding drive in group
Transmit data
F1760
d041.01 to .05 [Hex]
H304 (0)
.01
.02
.03
.04
.05
K
RS485 transmitter
Tx+
Tx-
70
71
to next drive in group
Parameters for peer-to-peer interface
H300 (0) Peer-to-peer on/off
H301 (0,000s) Message monitoring time (0="no time monitoring")
H302 (10) Baud rate
H303 (1) Number of words (1...5)
d042 Peer-to-peer diagnostic parameter
1 = Telegram monitoring timeout
B199
B200
1s
H305 (199)
B
Fault message trigger signal to basic unit
1 = "Fault F118"
- 17 -

Process data exchange with COM BOARD (CBx or SCBx)

(see also Chapter 3.7)

(the process data connection from/to the COM BOARD is not made via P694!)

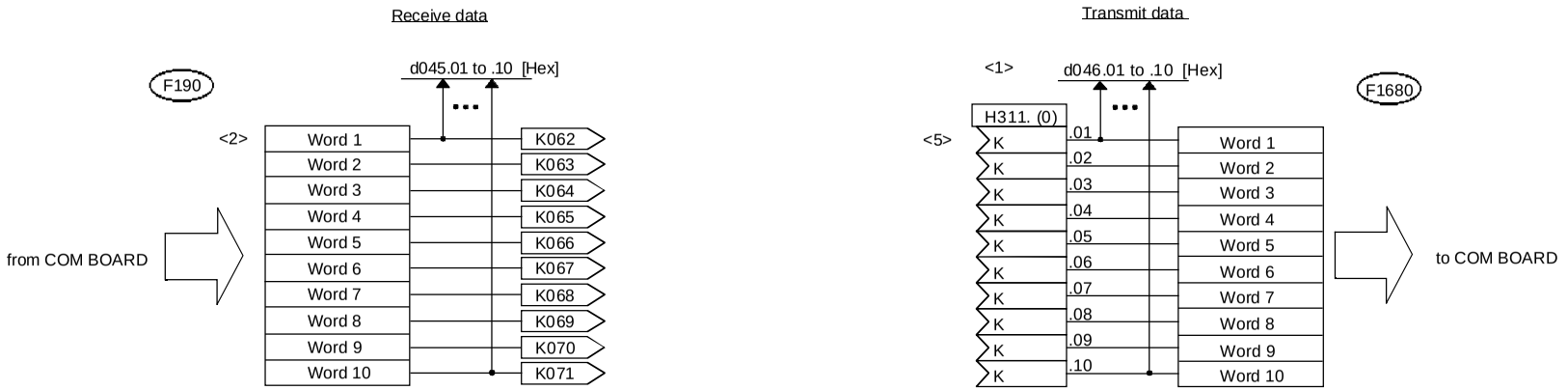

Parameters for COM BOARD <4>

MASTERDRIVE from 1997 / 98	MASTERDRIVE from 1995	
H310 (0.000s)	H310 (0.000s)	Message monitoring time (0="no time monitoring") <1>
P918	P918	Slave address
P711 - P721	P696 - P705, P918	COM BOARD configuration for CBx
P696 - P705	P660 - P662, P665, P666, P682 - P689	COM BOARD configuration for SCBx
r732, r958 r697	r731, r958 r730	CBx diagnostic, alarm parameters <3> SCBx dagnostic parameters
P053	P053	Enable parameterization (H and P parameters can be changed only when P053=n+1 for CBx or P053=n+8 for SCBx. All P, r ,U, n, H and d parameters can always be read).

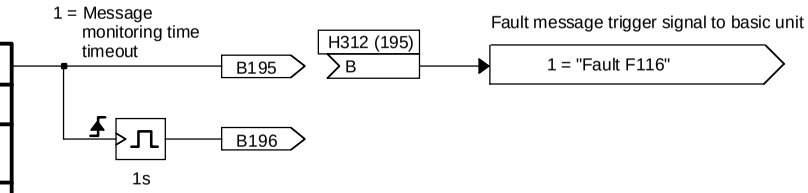

<1> If a T100 is installed, the message monitoring time is not set on the basic unit (e.g. in P704, P722 / P687, P695) but in H310, and the process data connection not made via P734 or P664, P690 and P694, but via H311 and K062 - K071.

<2> IMPORTANT !
The PROFIBUS interface (e.g. CBP / CB1) does not forward messages to the T100 if word 1 consists entirely of zeros (suppression of "initialization messages"). For this reason, it is advisable to use word 1 as a control word.
Bit 10 should in this case be reserved for "master function requested" and interconnected to control word 1 of the basic unit (see note <2> on Sheet [11]).

<3> On the "old" MASTERDRIVES (1995 onwards) the contents of CBx messages can be monitored in r731.09 to .18 (with P696 = 1 or 2)

<4> If the T100 is installed in a SIMOREG, please consult the relevant Operating Instructions for information about COM BOARD parameters.

<5> It is strongly recommended that transmit word 1 to the COM BOARD is permanently connected to status word 1 of the basic unit, as the PROFIBUS-DP interface CBP basically interprets bit 2^3 of this word as a fault bit, and signals a converter fault to the control system when it changes to the "1" state.

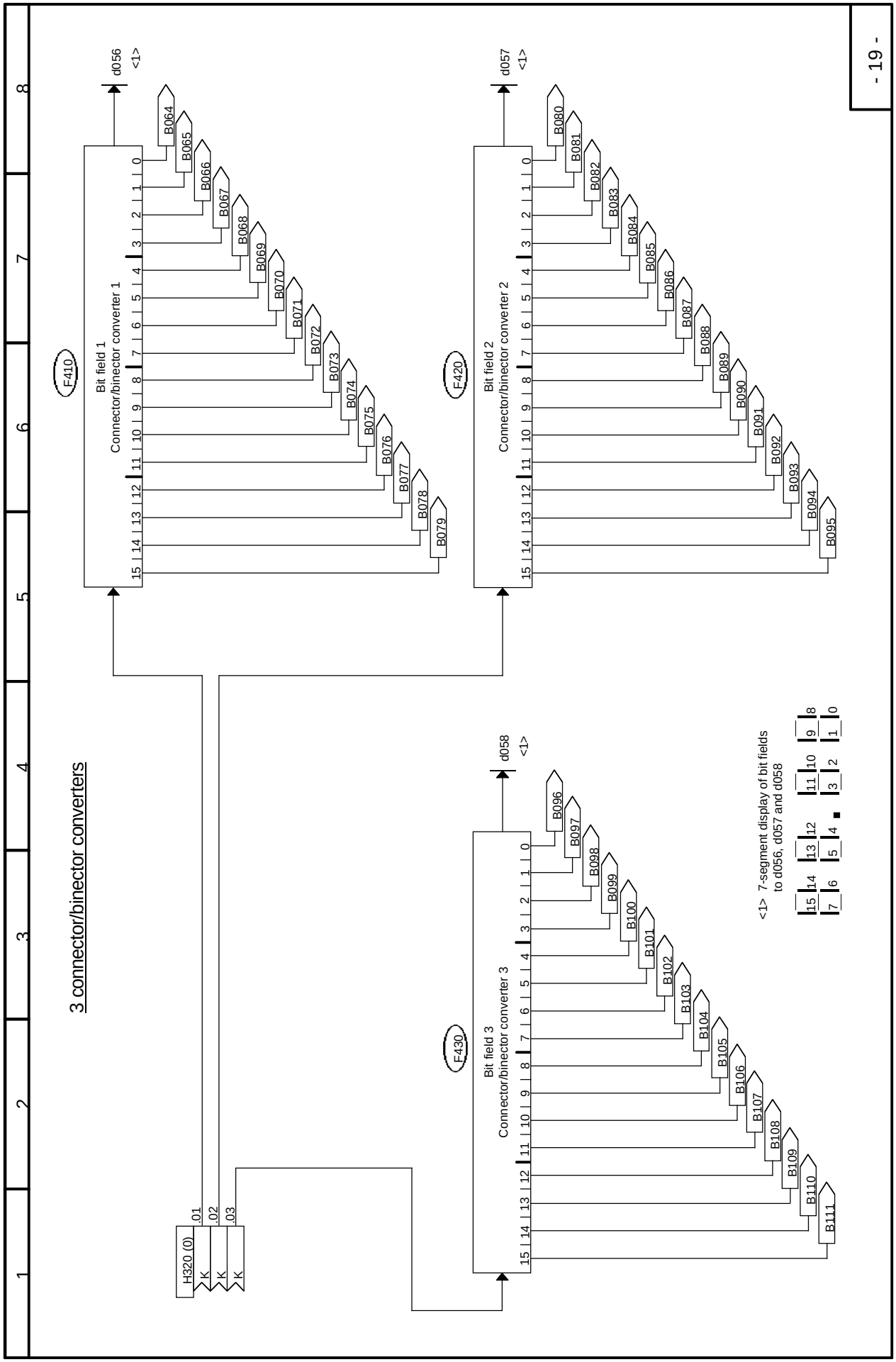
- 19 -
3 connector/binector converters
F410
Bit field 1
Connector/binector converter 1
d056 <1>
B064 B065 B066 B067 B068 B069 B070 B071 B072 B073 B074 B075 B076 B077 B078 B079
F420
Bit field 2
Connector/binector converter 2
d057 <1>
B080 B081 B082 B083 B084 B085 B086 B087 B088 B089 B090 B091 B092 B093 B094 B095
F430
Bit field 3
Connector/binector converter 3
d058 <1>
B096 B097 B098 B099 B100 B101 B102 B103 B104 B105 B106 B107 B108 B109 B110 B111
H320 (0)
.01
.02
.03
K
K
K
<1> 7-segment display of bit fields
to d056, d057 and d058

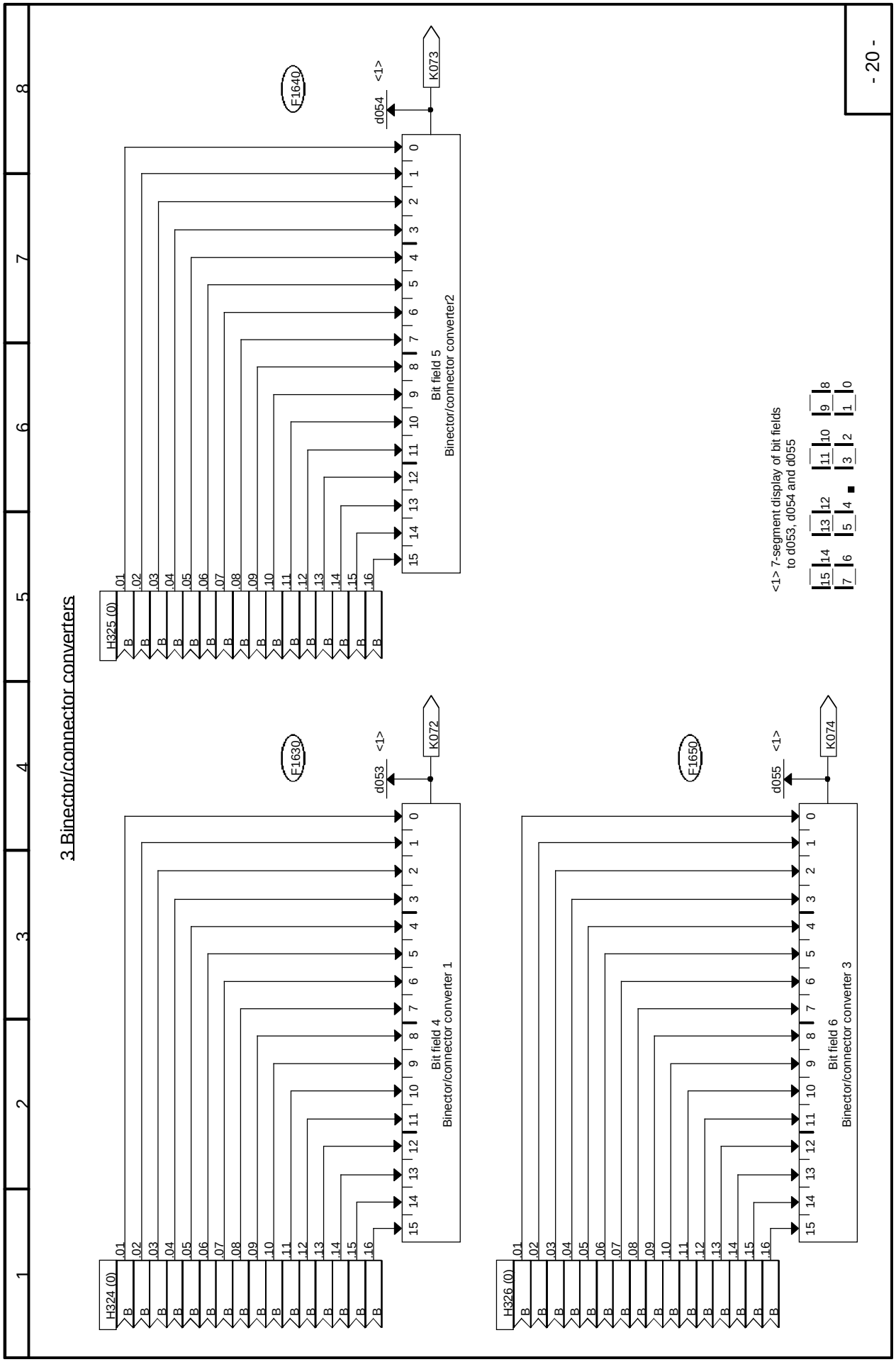
3 Binector/connector converters
- 20 -
F1640
d054 <1>
K073
H325 (0)
Bit field 5
Binector/connector converter2
F1630
d053 <1>
K072
H324 (0)
Bit field 4
Binector/connector converter 1
F1650
d055 <1>
K074
H326 (0)
Bit field 6
Binector/connector converter 3
<1> 7-segment display of bit fields
to d053, d054 and d055

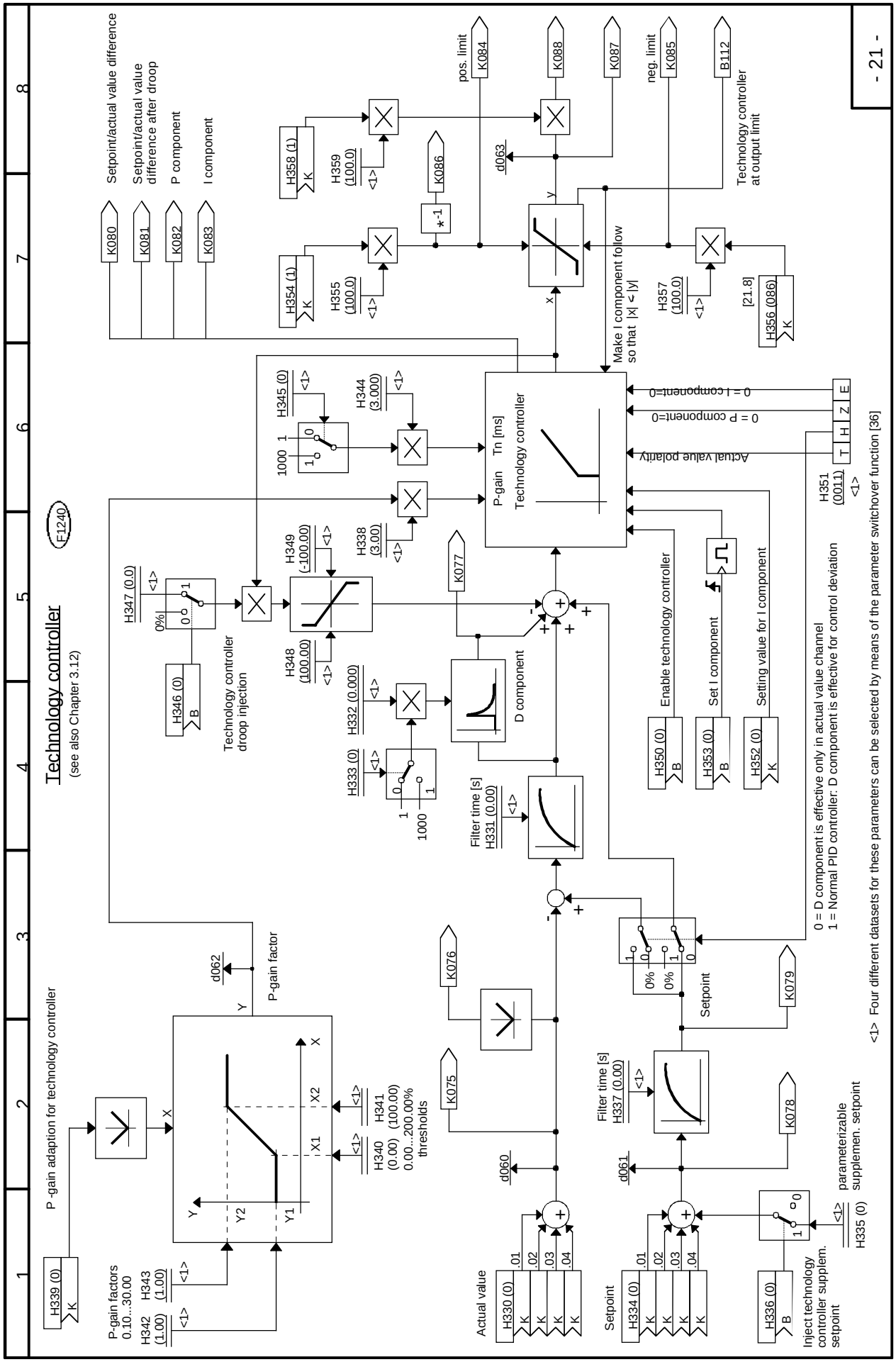
Technology controller
(see also Chapter 3.12)
F1240
- 21 -
Setpoint/actual value difference
Setpoint/actual value difference after droop
P component
I component
K080
K081
K082
K083
pos. limit
neg. limit
Technology controller at output limit
K084
K085
B112
K087
K088
d063
K086
H358 (1)
H359 (100.0)
H354 (1)
H355 (100.0)
H357 (100.0)
[21.8]
H356 (086)
Make I component follow so that |x| < |y|
P-gain Tn [ms] Technology controller
Actual value polarity
0 = P component=0
0 = I component=0
H351 (0011)
H345 (0)
H344 (3.000)
H347 (0.0)
H349 (-100.00)
H338 (3.00)
H348 (100.00)
H346 (0)
Technology controller droop injection
H332 (0.000)
H333 (0)
D component
K077
Filter time [s] H331 (0.00)
H350 (0)
Enable technology controller
H353 (0)
Set I component
H352 (0)
Setting value for I component
0 = D component is effective only in actual value channel
1 = Normal PID controller: D component is effective for control deviation
<1> Four different datasets for these parameters can be selected by means of the parameter switchover function [36]
P-gain adaption for technology controller
H339 (0)
P-gain factors 0.10...30.00
H342 (1.00)
H343 (1.00)
d062
P-gain factor
H340 (0.00)
H341 (100.00)
0.00...200.00% thresholds
K076
K075
K079
K078
Setpoint
Filter time [s] H337 (0.00)
d060
d061
Actual value
H330 (0)
Setpoint
H334 (0)
H336 (0)
Inject technology controller supplem. setpoint
parameterizable supplemen. setpoint
H335 (0)

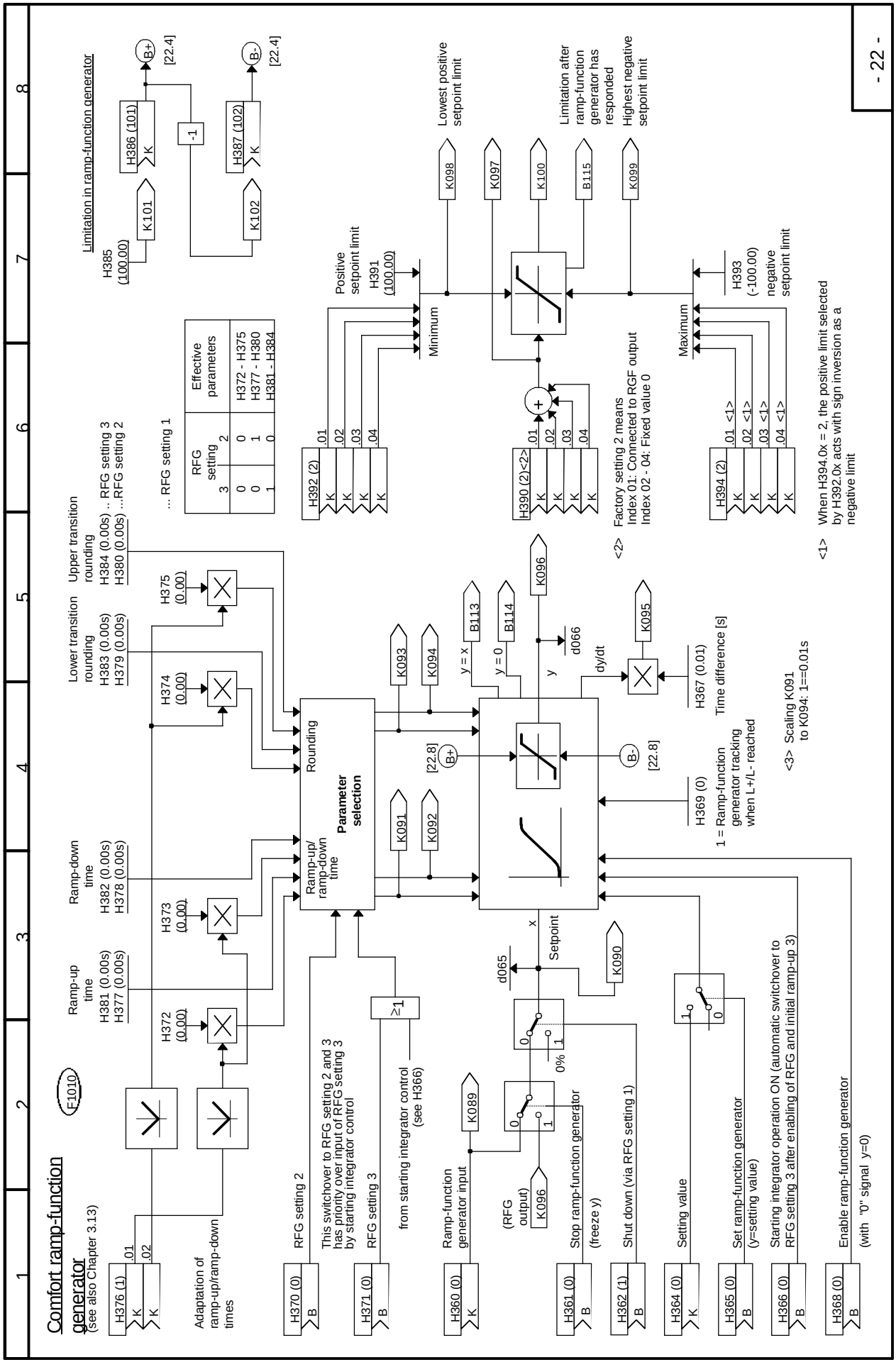
Comfort ramp-function generator
(see also Chapter 3.13)
F1010
H376 (1)
Adaptation of ramp-up/ramp-down times
H372 (0.00)
H373 (0.00)
H374 (0.00)
H375 (0.00)
Ramp-up time
H381 (0.00s)
H377 (0.00s)
Ramp-down time
H382 (0.00s)
H378 (0.00s)
Lower transition rounding
H383 (0.00s)
H379 (0.00s)
Upper transition rounding
H384 (0.00s) .. RFG setting 3
H380 (0.00s) ...RFG setting 2
... RFG setting 1
RFG setting
3 2
0 0
0 1
1 0
Effective parameters
H372 - H375
H377 - H380
H381 - H384
Limitation in ramp-function generator
H385 (100.00)
K101
K102
H386 (101)
H387 (102)
-1
B+
B-
[22.4]
H392 (2)
Positive setpoint limit
H391 (100.00)
Minimum
Lowest positive setpoint limit
K098
K097
K100
B115
K099
Limitation after ramp-function generator has responded
Highest negative setpoint limit
H390 (2)<2>
Factory setting 2 means
Index 01: Comected to RGF output
Index 02 - 04: Fixed value 0
<2>
Maximum
H393 (-100.00)
negative setpoint limit
H394 (2)
When H394.0x = 2, the positive limit selected by H392.0x acts with sign inversion as a negative limit
<1>
Ramp-up/ ramp-down time
Parameter selection
Rounding
K091
K092
K093
K094
B113
B114
K096
K095
y = x
y = 0
y
d066
dy/dt
H367 (0.01)
Time difference [s]
[22.8]
H369 (0)
1 = Ramp-function generator tracking when L+/L- reached
<3> Scaling K091 to K094: 1==0.01s
x
Setpoint
d065
K090
0%
K089
(RFG output)
K096
≥1
from starting integrator control (see H366)
H370 (0)
RFG setting 2
This switchover to RFG setting 2 and 3 has priority over input of RFG setting 3 by starting integrator control
H371 (0)
RFG setting 3
H360 (0)
Ramp-function generator input
H361 (0)
Stop ramp-function generator (freeze y)
H362 (1)
Shut down (via RFG setting 1)
H364 (0)
Setting value
H365 (0)
Set ramp-function generator (y=setting value)
H366 (0)
Starting integrator operation ON (automatic switchover to RFG setting 3 after enabling of RFG and initial ramp-up 3)
H368 (0)
Enable ramp-function generator
(with "0" signal y=0)
- 22 -

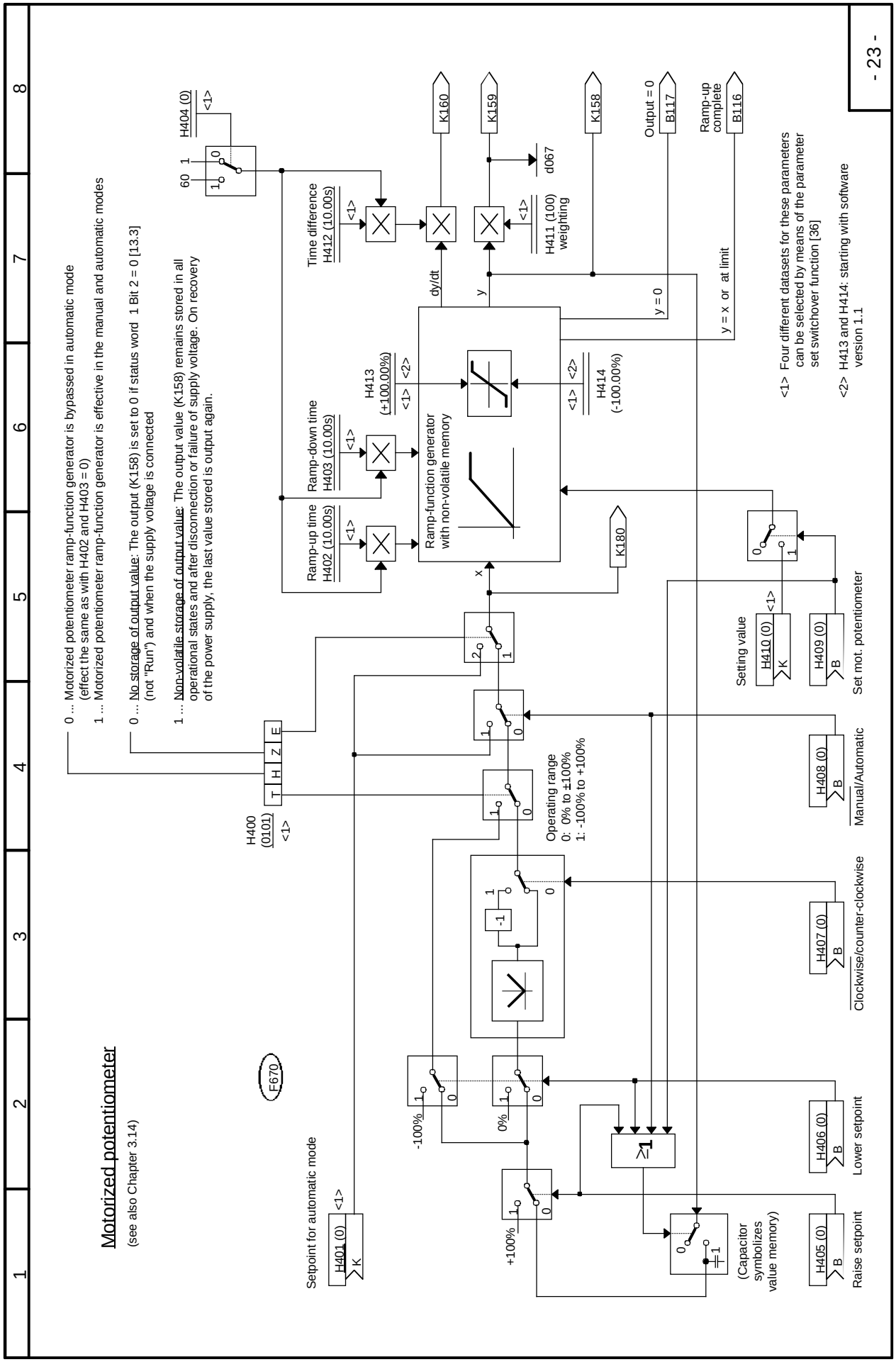
Motorized potentiometer
(see also Chapter 3.14)
0 ... Motorized potentiometer ramp-function generator is bypassed in automatic mode (effect the same as with H402 and H403 = 0)
1 ... Motorized potentiometer ramp-function generator is effective in the manual and automatic modes
0 ... No storage of output value: The output (K158) is set to 0 if status word 1 Bit 2 = 0 [13.3] (not "Run") and when the supply voltage is connected
1 ... Non-volatile storage of output value: The output value (K158) remains stored in all operational states and after disconnection or failure of supply voltage. On recovery of the power supply, the last value stored is output again.
T H Z E
H400 (0101) <1>
F670
Setpoint for automatic mode
H401 (0) <1> K
Raise setpoint
H405 (0) B
Lower setpoint
H406 (0) B
Clockwise/counter-clockwise
H407 (0) B
Manual/Automatic
H408 (0) B
Set mot. potentiometer
H409 (0) B
Setting value
H410 (0) <1> K
Operating range
0: 0% to ±100%
1: -100% to +100%
-100%
0%
+100%
-1
≥1
(Capacitor symbolizes value memory)
Ramp-up time H402 (10.00s)
Ramp-down time H403 (10.00s)
Ramp-function generator with non-volatile memory
H413 (+100.00%)
H414 (-100.00%)
Time difference H412 (10.00s)
H411 (100) weighting
H404 (0) <1>
60
dy/dt
y
x
y = 0
y = x or at limit
K160
K159
K158
K180
d067
Output = 0 B117
Ramp-up complete B116
<1> Four different datasets for these parameters can be selected by means of the parameter set switchover function [36]
<2> H413 and H414: starting with software version 1.1
- 23 -

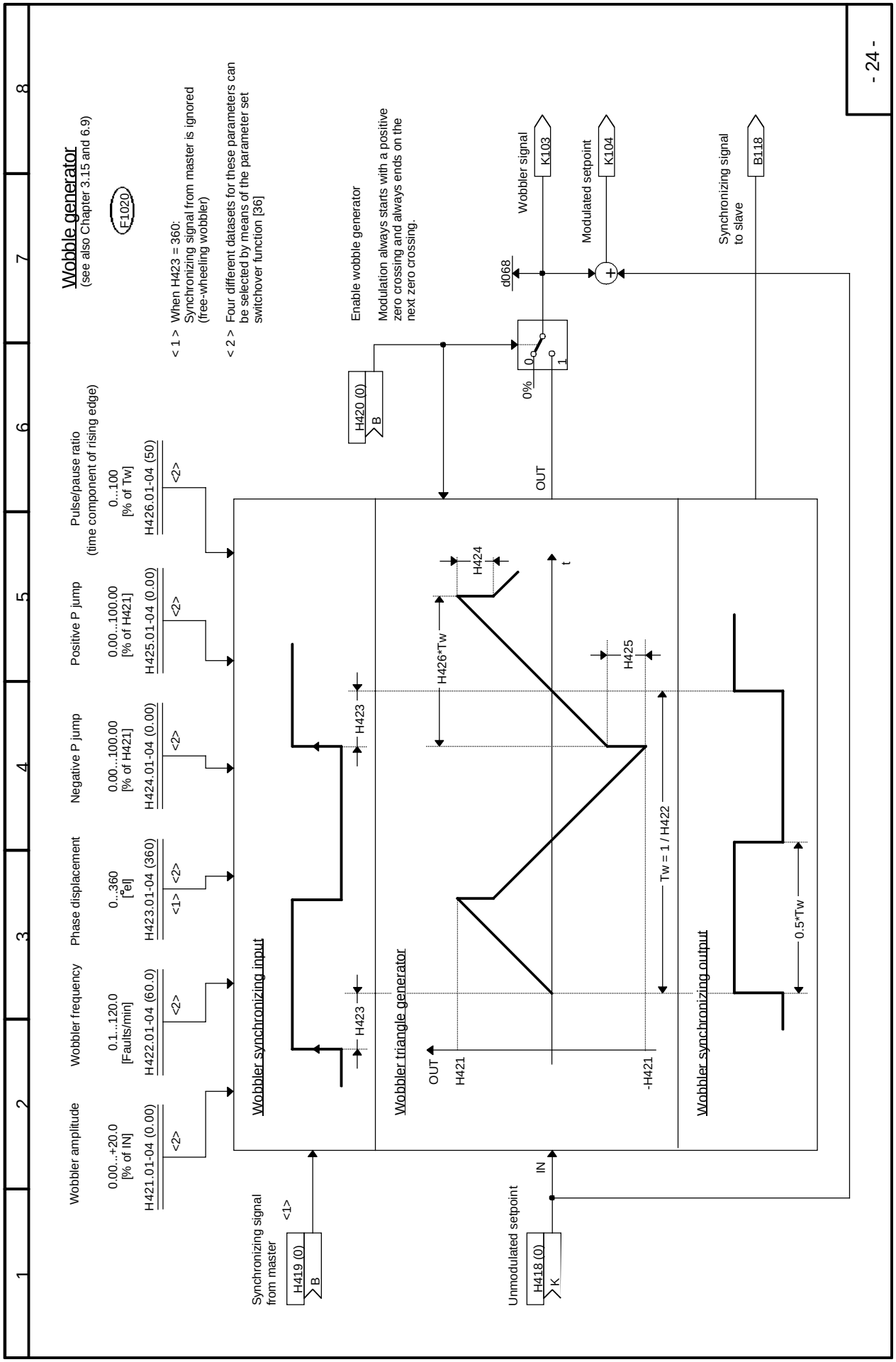
Wobble generator
(see also Chapter 3.15 and 6.9)
F1020
- 24 -
< 1 > When H423 = 360:
Synchronizing signal from master is ignored
(free-wheeling wobbler)
< 2 > Four different datasets for these parameters can be selected by means of the parameter set switchover function [36]
Wobbler amplitude
0.00...+20.0 [% of IN]
H421.01-04 (0.00)
Wobbler frequency
0.1...120.0 [Faults/min]
H422.01-04 (60.0)
Phase displacement
0...360 [°el]
H423.01-04 (360)
Negative P jump
0.00...100.00 [% of H421]
H424.01-04 (0.00)
Positive P jump
0.00...100.00 [% of H421]
H425.01-04 (0.00)
Pulse/pause ratio
(time component of rising edge)
0...100 [% of Tw]
H426.01-04 (50)
Synchronizing signal from master
H419 (0) B
Unmodulated setpoint
H418 (0) K
Enable wobble generator
H420 (0) B
Modulation always starts with a positive zero crossing and always ends on the next zero crossing.
Wobbler signal
K103
Modulated setpoint
K104
Synchronizing signal to slave
B118
d068
0%
OUT
Wobbler synchronizing input
Wobbler triangle generator
Wobbler synchronizing output
H423
H424
H425
H426*Tw
Tw = 1 / H422
0.5*Tw
H421
-H421
t

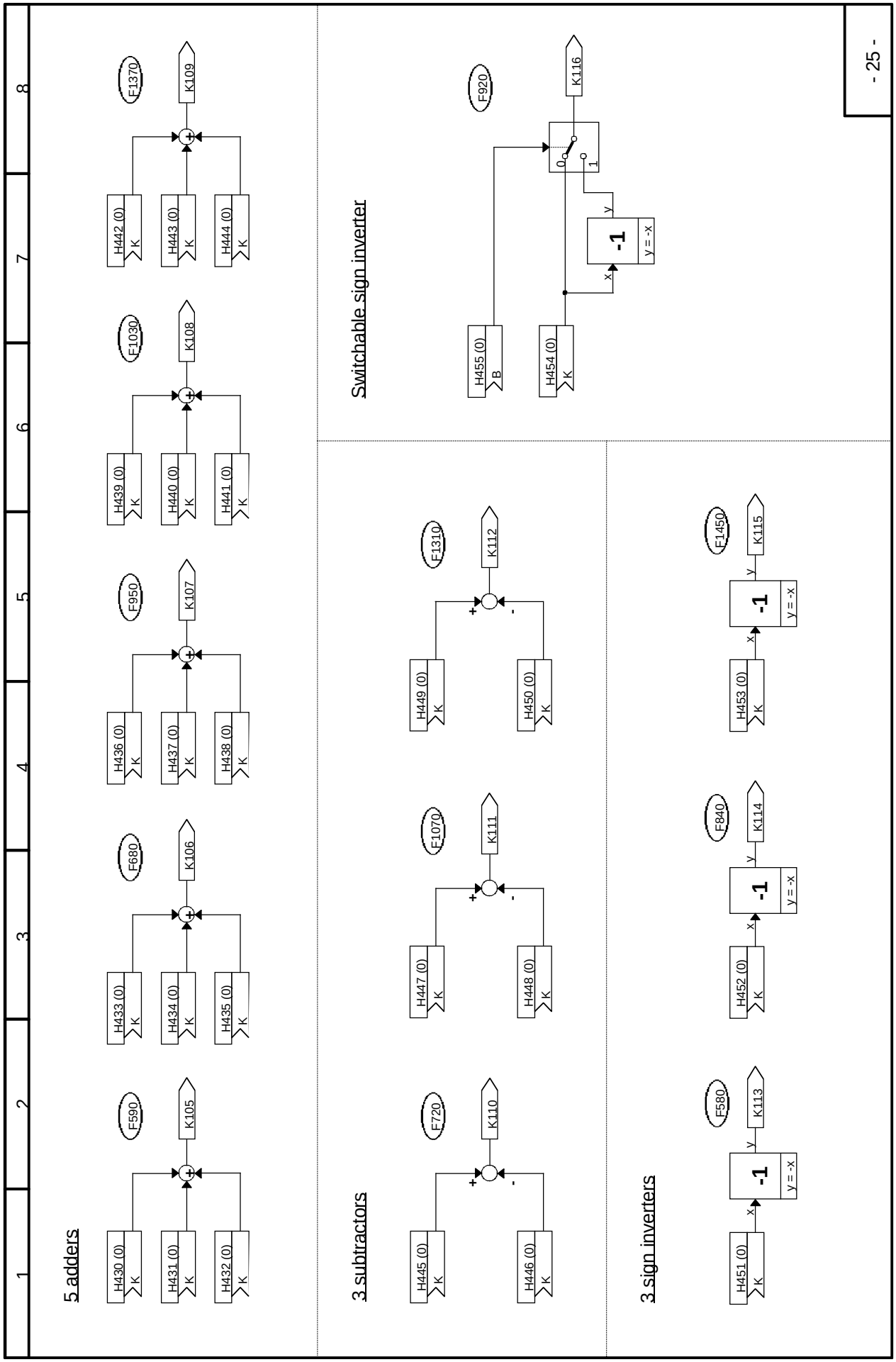
5 adders
H430 (0)
H431 (0)
H432 (0)
F590
K105
H433 (0)
H434 (0)
H435 (0)
F680
K106
H436 (0)
H437 (0)
H438 (0)
F950
K107
H439 (0)
H440 (0)
H441 (0)
F1030
K108
H442 (0)
H443 (0)
H444 (0)
F1370
K109
3 subtractors
H445 (0)
H446 (0)
F720
K110
H447 (0)
H448 (0)
F1070
K111
H449 (0)
H450 (0)
F1310
K112
Switchable sign inverter
H455 (0)
H454 (0)
F920
K116
-1
y = -x
3 sign inverters
H451 (0)
F580
K113
H452 (0)
F840
K114
H453 (0)
F1450
K115
- 25 -

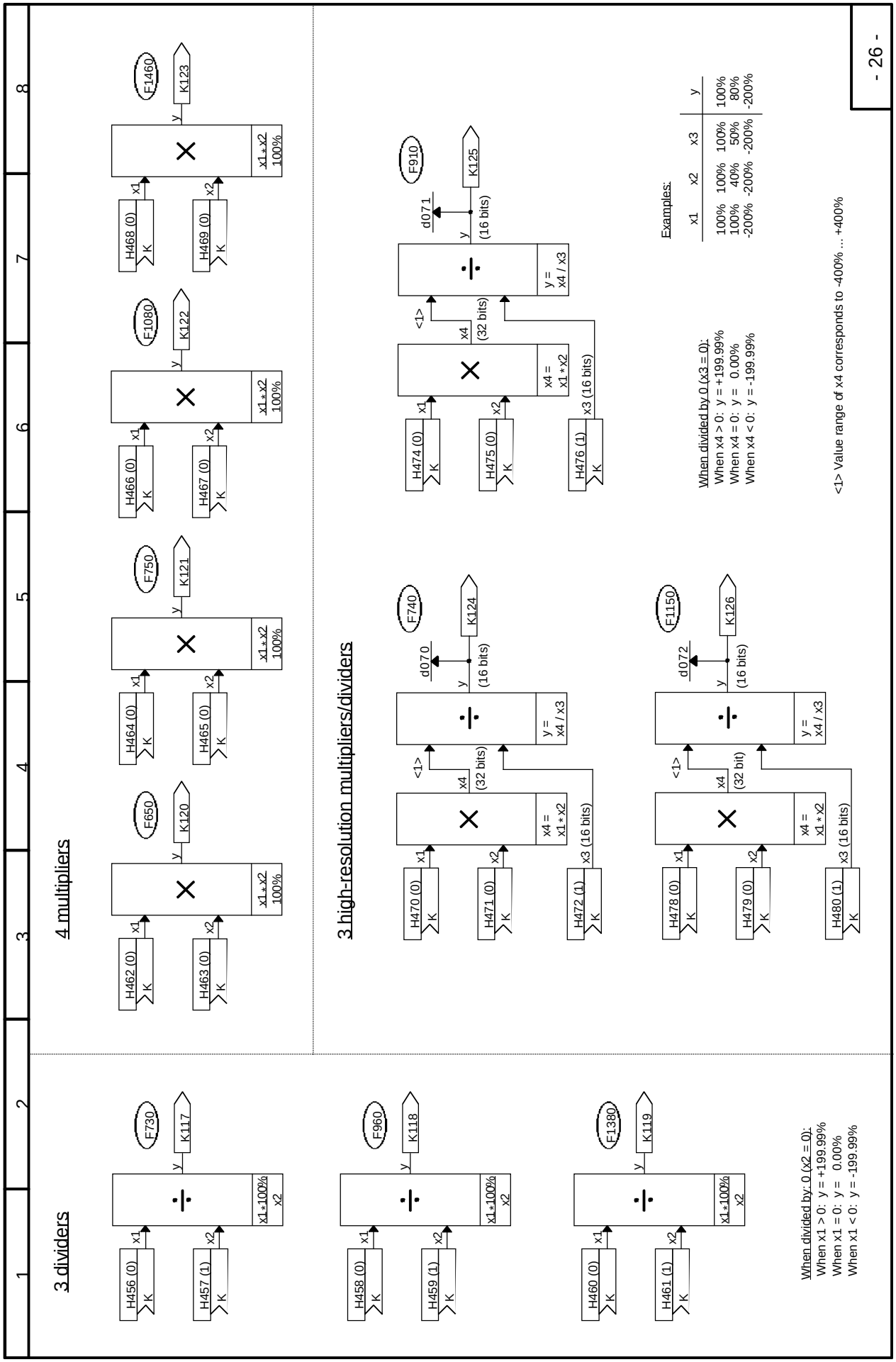
1
2
3
4
5
6
7
8
3 dividers
4 multipliers
3 high-resolution multipliers/dividers
- 26 -
H456 (0)
H457 (1)
F730
K117
x1:x2*100%
H458 (0)
H459 (1)
F960
K118
x1:x2*100%
H460 (0)
H461 (1)
F1380
K119
x1:x2*100%
When divided by: 0 (x2 = 0):
When x1 > 0: y = +199.99%
When x1 = 0: y = 0.00%
When x1 < 0: y = -199.99%
H462 (0)
H463 (0)
F650
K120
x1*x2 100%
H464 (0)
H465 (0)
F750
K121
x1*x2 100%
H466 (0)
H467 (0)
F1080
K122
x1*x2 100%
H468 (0)
H469 (0)
F1460
K123
x1*x2 100%
H470 (0)
H471 (0)
H472 (1)
F740
d070
K124
(16 bits)
<1>
x4 (32 bits)
x4 = x1 * x2
y = x4 / x3
H474 (0)
H475 (0)
H476 (1)
F910
d071
K125
(16 bits)
x3 (16 bits)
H478 (0)
H479 (0)
H480 (1)
F1150
d072
K126
(16 bits)
Examples:
x1 x2 x3 y
100% 100% 100% 100%
100% 40% 50% 80%
-200% -200% -200% -200%
When divided by 0 (x3 = 0):
When x4 > 0: y = +199.99%
When x4 = 0: y = 0.00%
When x4 < 0: y = -199.99%
<1> Value range of x4 corresponds to -400% ... +400%

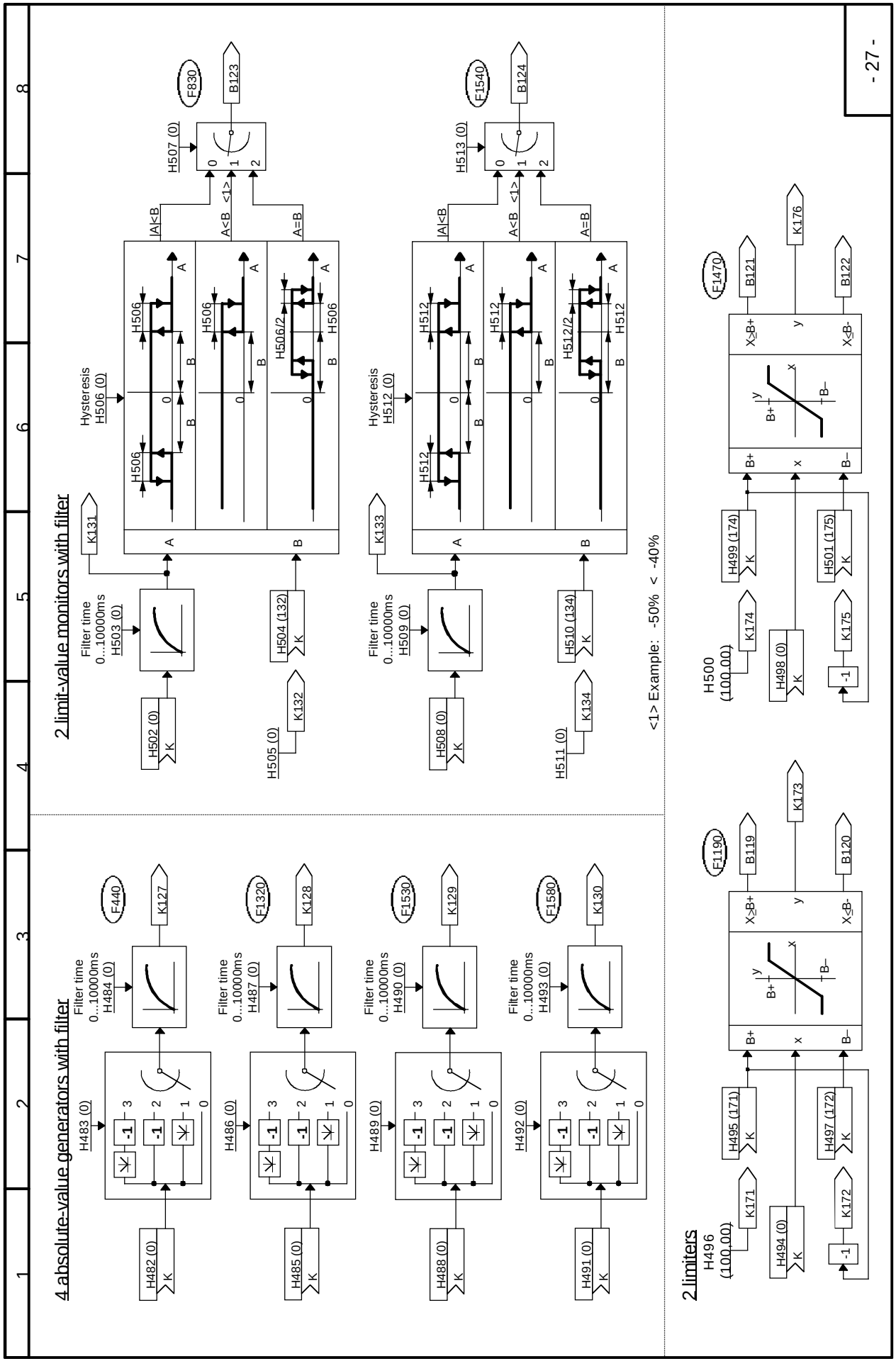
4 absolute-value generators with filter
H483 (0)
H486 (0)
H489 (0)
H492 (0)
Filter time 0...10000ms
H484 (0)
H487 (0)
H490 (0)
H493 (0)
F440
F1320
F1530
F1580
K127
K128
K129
K130
H482 (0)
H485 (0)
H488 (0)
H491 (0)
2 limit-value monitors with filter
Hysteresis
H506 (0)
H512 (0)
Filter time 0...10000ms
H503 (0)
H509 (0)
K131
K133
H502 (0)
H508 (0)
H505 (0)
H511 (0)
K132
K134
H504 (132)
H510 (134)
|A|<B
A<B <1>
A=B
F830
F1540
H507 (0)
H513 (0)
B123
B124
<1> Example: -50% < -40%
2 limiters
H496 (100.00)
H500 (100.00)
F1190
F1470
K171
K172
K173
K174
K175
K176
H494 (0)
H495 (171)
H497 (172)
H498 (0)
H499 (174)
H501 (175)
B119
B120
B121
B122
- 27 -

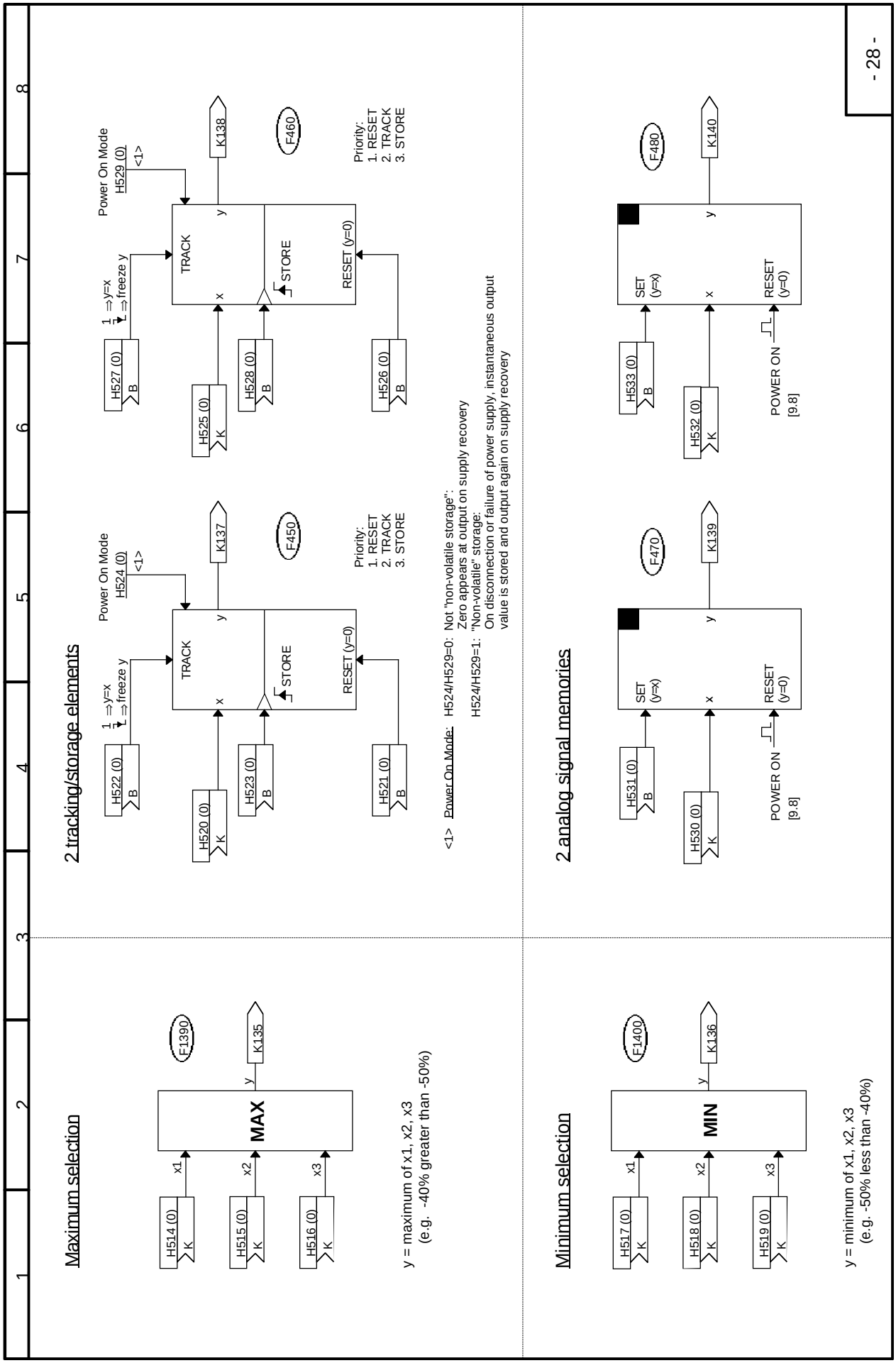
- 28 -
Maximum selection
H514 (0) K
H515 (0) K
H516 (0) K
x1
x2
x3
MAX
F1390
K135
y = maximum of x1, x2, x3
(e.g. -40% greater than -50%)
2 tracking/storage elements
H522 (0) B
H520 (0) K
H523 (0) B
H521 (0) B
1 ⇒y=x
0 ⇒freeze y
TRACK
STORE
RESET (y=0)
Power On Mode
H524 (0)
<1>
K137
F450
Priority:
1. RESET
2. TRACK
3. STORE
H527 (0) B
H525 (0) K
H528 (0) B
H526 (0) B
Power On Mode
H529 (0)
<1>
K138
F460
Priority:
1. RESET
2. TRACK
3. STORE
<1> Power On Mode: H524/H529=0: Not "non-volatile storage":
Zero appears at output on supply recovery
H524/H529=1: "Non-volatile" storage:
On disconnection or failure of power supply, instantaneous output value is stored and output again on supply recovery
2 analog signal memories
H531 (0) B
H530 (0) K
SET (y=x)
RESET (y=0)
POWER ON
[9.8]
F470
K139
H533 (0) B
H532 (0) K
F480
K140
Minimum selection
H517 (0) K
H518 (0) K
H519 (0) K
MIN
F1400
K136
y = minimum of x1, x2, x3
(e.g. -50% less than -40%)

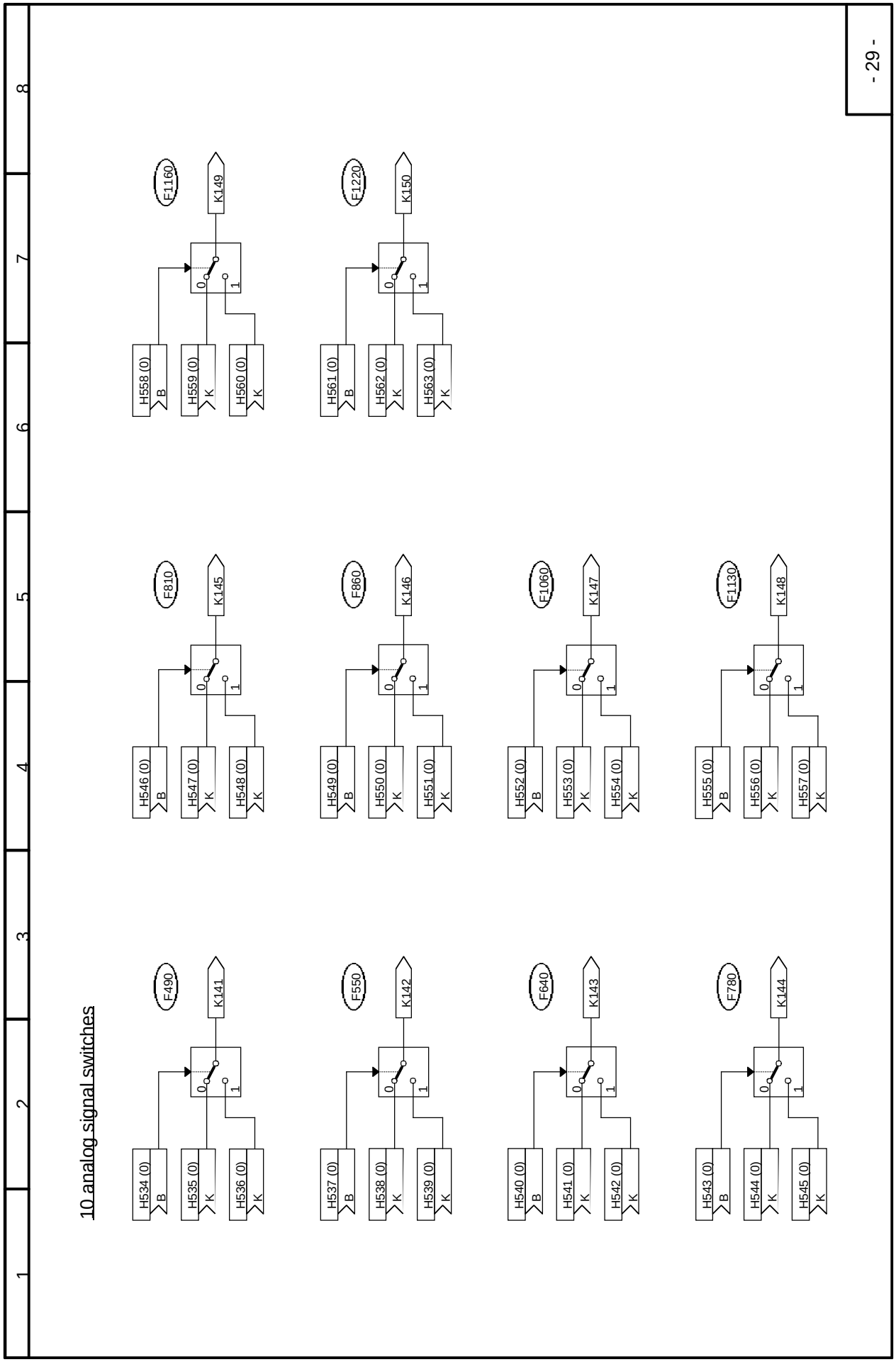
10 analog signal switches
- 29 -
F490
K141
H534 (0)
H535 (0)
H536 (0)
F550
K142
H537 (0)
H538 (0)
H539 (0)
F640
K143
H540 (0)
H541 (0)
H542 (0)
F780
K144
H543 (0)
H544 (0)
H545 (0)
F810
K145
H546 (0)
H547 (0)
H548 (0)
F860
K146
H549 (0)
H550 (0)
H551 (0)
F1060
K147
H552 (0)
H553 (0)
H554 (0)
F1130
K148
H555 (0)
H556 (0)
H557 (0)
F1160
K149
H558 (0)
H559 (0)
H560 (0)
F1220
K150
H561 (0)
H562 (0)
H563 (0)

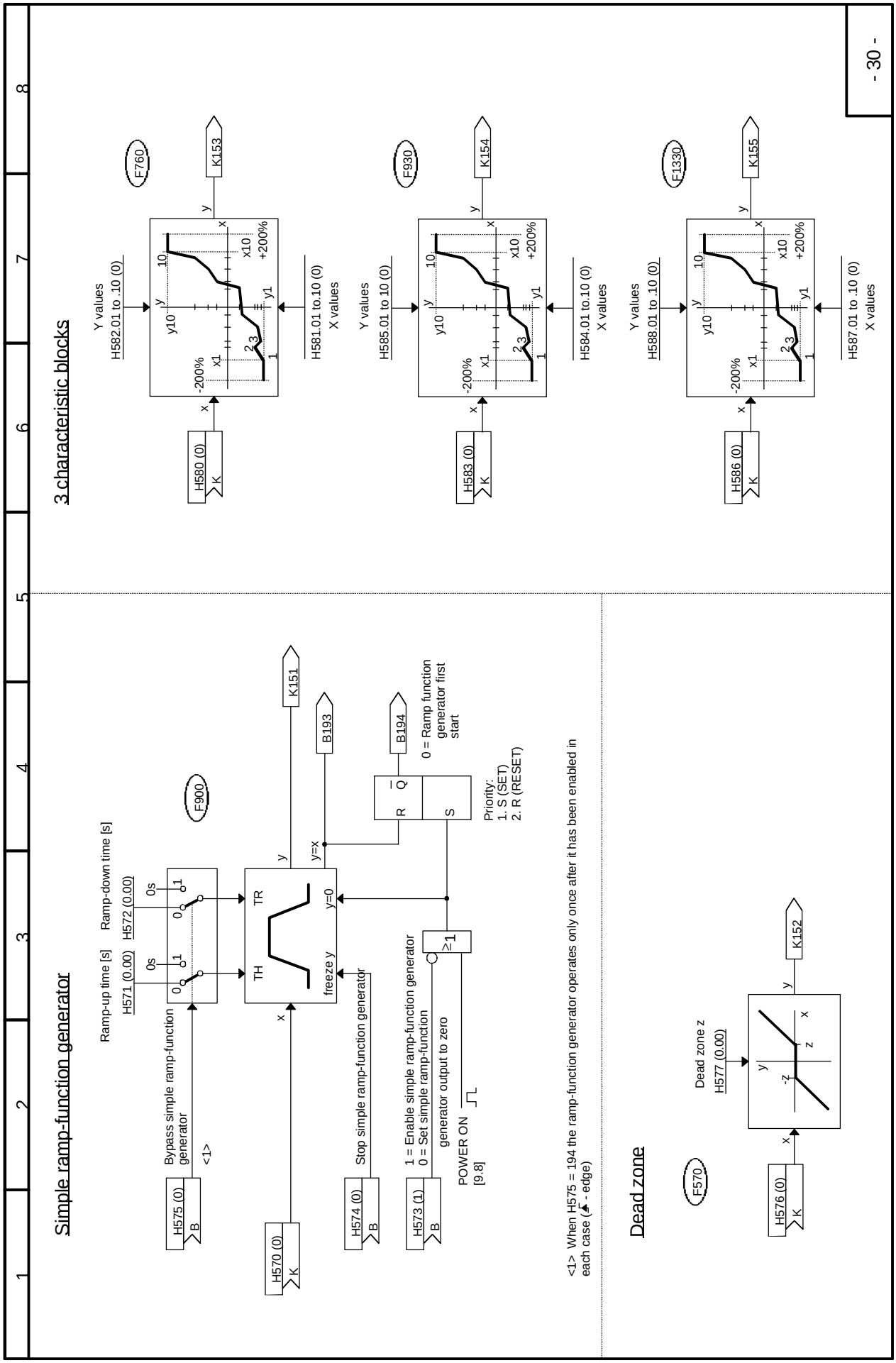
- 30 -
3 characteristic blocks
F760
K153
Y values
H582.01 to .10 (0)
H581.01 to.10 (0)
X values
H580 (0)
F930
K154
H585.01 to 10 (0)
H584.01 to.10 (0)
H583 (0)
F1330
K155
H588.01 to .10 (0)
H587.01 to .10 (0)
H586 (0)
Simple ramp-function generator
Ramp-up time [s]
H571 (0.00)
Ramp-down time [s]
H572 (0.00)
F900
Bypass simple ramp-function generator
H575 (0)
<1>
H570 (0)
K151
B193
B194
H574 (0)
Stop simple ramp-function generator
H573 (1)
1 = Enable simple ramp-function generator
0 = Set simple ramp-function generator output to zero
POWER ON
[9.8]
0 = Ramp function generator first start
Priority:
1. S (SET)
2. R (RESET)
<1> When H575 = 194 the ramp-function generator operates only once after it has been enabled in each case (↗ - edge)
Dead zone
F570
Dead zone z
H577 (0.00)
H576 (0)
K152

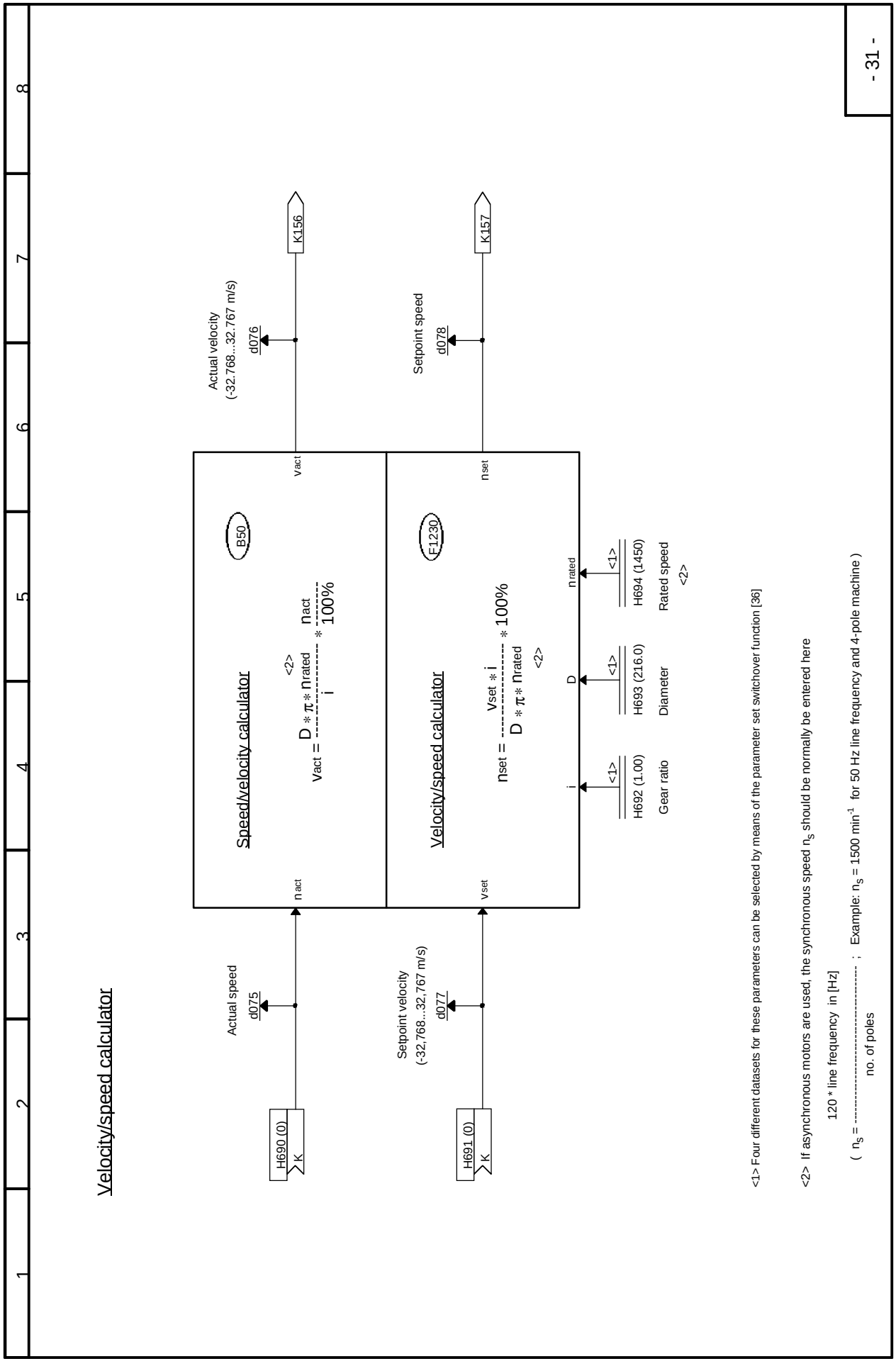
Velocity/speed calculator
Actual speed
d075
H690 (0)
K
Setpoint velocity
(-32,768...32,767 m/s)
d077
H691 (0)
K
nact
vset
Speed/velocity calculator
B50
vact = D * π * nrated / i <2> * nact / 100%
vact
Actual velocity
(-32.768...32.767 m/s)
d076
K156
Velocity/speed calculator
F1230
nset = vset * i / (D * π * nrated) <2> * 100%
i
<1>
H692 (1.00)
Gear ratio
D
<1>
H693 (216.0)
Diameter
nrated
<1>
H694 (1450)
Rated speed
<2>
nset
Setpoint speed
d078
K157
<1> Four different datasets for these parameters can be selected by means of the parameter set switchover function [36]
<2> If asynchronous motors are used, the synchronous speed ns should be normally be entered here
ns = 120 * line frequency in [Hz] / no. of poles ; Example: ns = 1500 min-1 for 50 Hz line frequency and 4-pole machine)
- 31 -

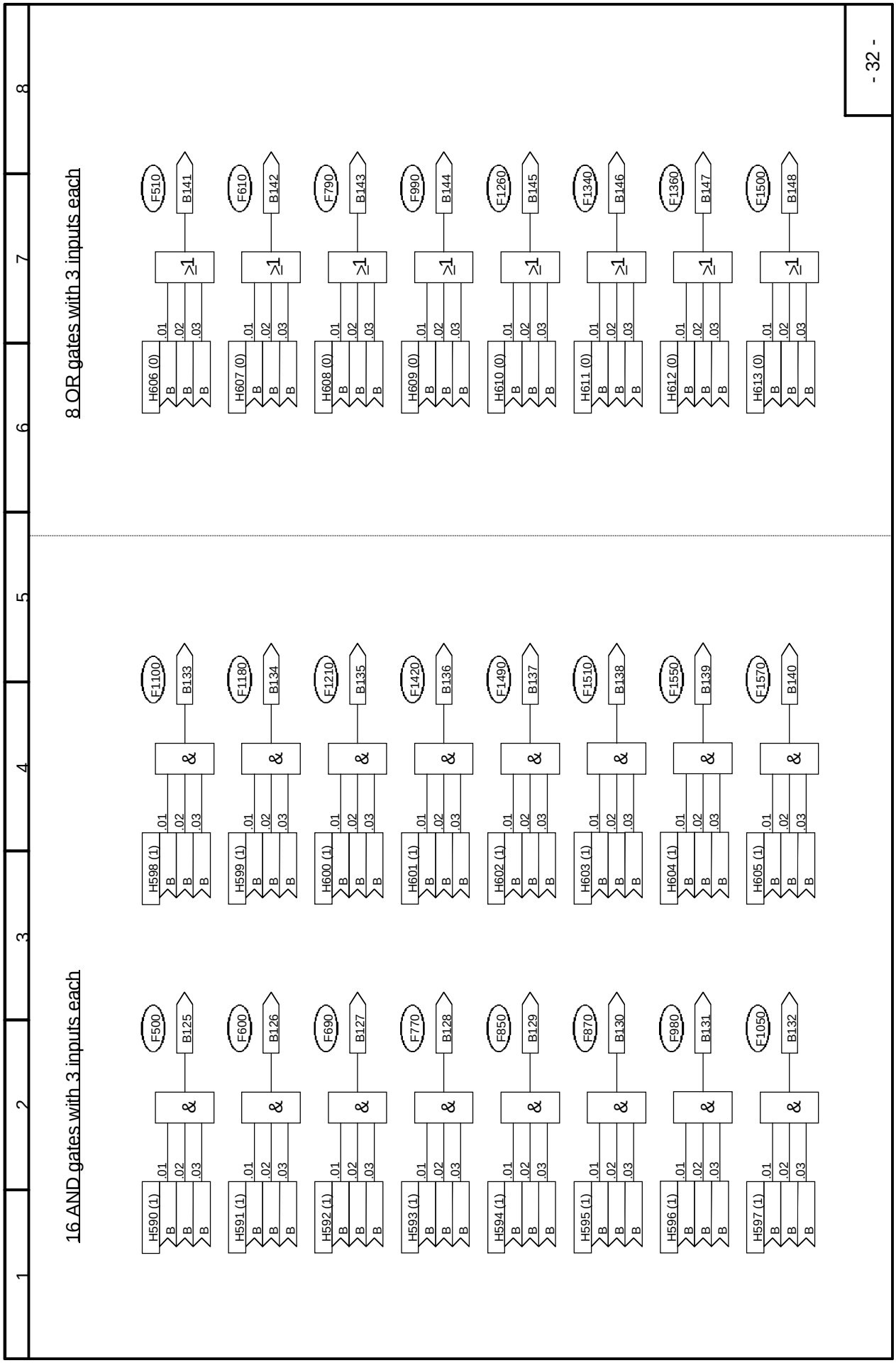
- 32 -
8 OR gates with 3 inputs each
16 AND gates with 3 inputs each
H590 (1)
H591 (1)
H592 (1)
H593 (1)
H594 (1)
H595 (1)
H596 (1)
H597 (1)
H598 (1)
H599 (1)
H600 (1)
H601 (1)
H602 (1)
H603 (1)
H604 (1)
H605 (1)
H606 (0)
H607 (0)
H608 (0)
H609 (0)
H610 (0)
H611 (0)
H612 (0)
H613 (0)
F500
F600
F690
F770
F850
F870
F980
F1050
F1100
F1180
F1210
F1420
F1490
F1510
F1550
F1570
F510
F610
F790
F990
F1260
F1340
F1360
F1500
B125
B126
B127
B128
B129
B130
B131
B132
B133
B134
B135
B136
B137
B138
B139
B140
B141
B142
B143
B144
B145
B146
B147
B148

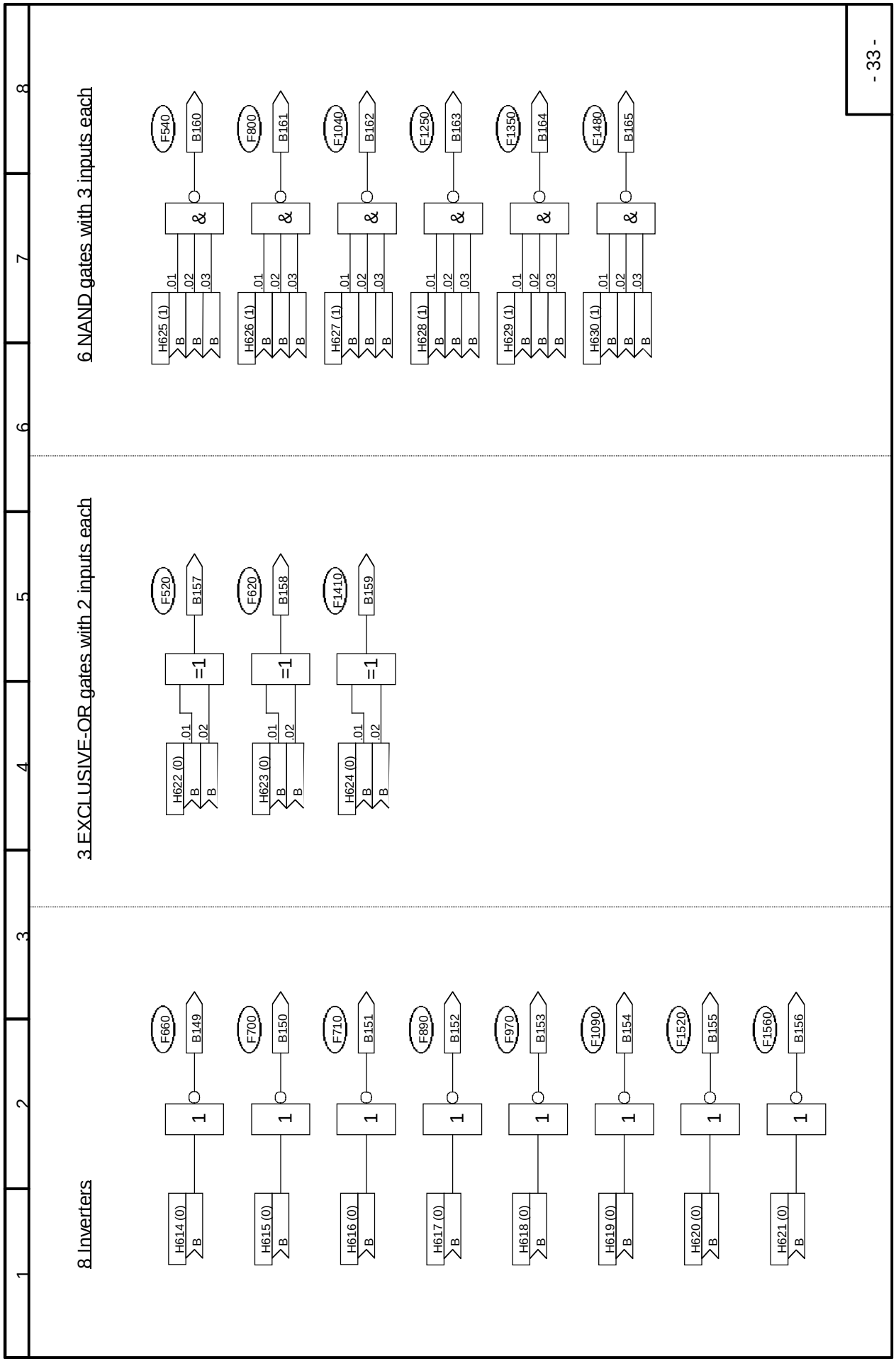
8 Inverters
3 EXCLUSIVE-OR gates with 2 inputs each
6 NAND gates with 3 inputs each
- 33 -
1
2
3
4
5
6
7
8
H614 (0)
H615 (0)
H616 (0)
H617 (0)
H618 (0)
H619 (0)
H620 (0)
H621 (0)
F660
F700
F710
F890
F970
F1090
F1520
F1560
B149
B150
B151
B152
B153
B154
B155
B156
H622 (0)
H623 (0)
H624 (0)
F520
F620
F1410
B157
B158
B159
H625 (1)
H626 (1)
H627 (1)
H628 (1)
H629 (1)
H630 (1)
F540
F800
F1040
F1250
F1350
F1480
B160
B161
B162
B163
B164
B165

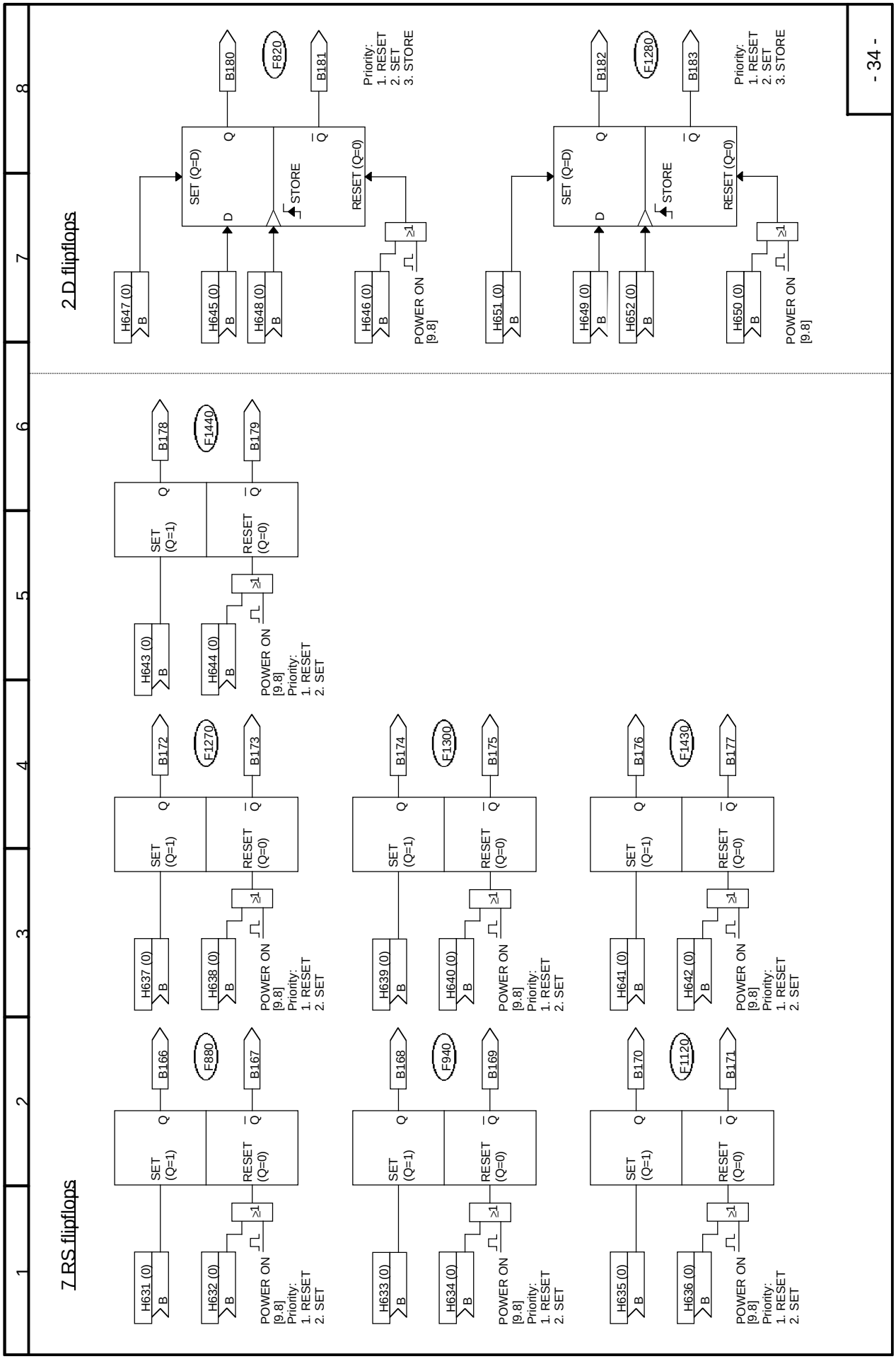
1
2
3
4
5
6
7
8
- 34 -
2 D flipflops
H647 (0)
H645 (0)
H648 (0)
H646 (0)
SET (Q=D)
STORE
RESET (Q=0)
B180
F820
B181
Priority:
1. RESET
2. SET
3. STORE
POWER ON
[9.8]
H651 (0)
H649 (0)
H652 (0)
H650 (0)
B182
F1280
B183
7 RS flipflops
H631 (0)
H632 (0)
SET (Q=1)
RESET (Q=0)
B166
F880
B167
POWER ON
[9.8]
Priority:
1. RESET
2. SET
H633 (0)
H634 (0)
B168
F940
B169
H635 (0)
H636 (0)
B170
F1120
B171
H637 (0)
H638 (0)
B172
F1270
B173
H639 (0)
H640 (0)
B174
F1300
B175
H641 (0)
H642 (0)
B176
F1430
B177
H643 (0)
H644 (0)
B178
F1440
B179

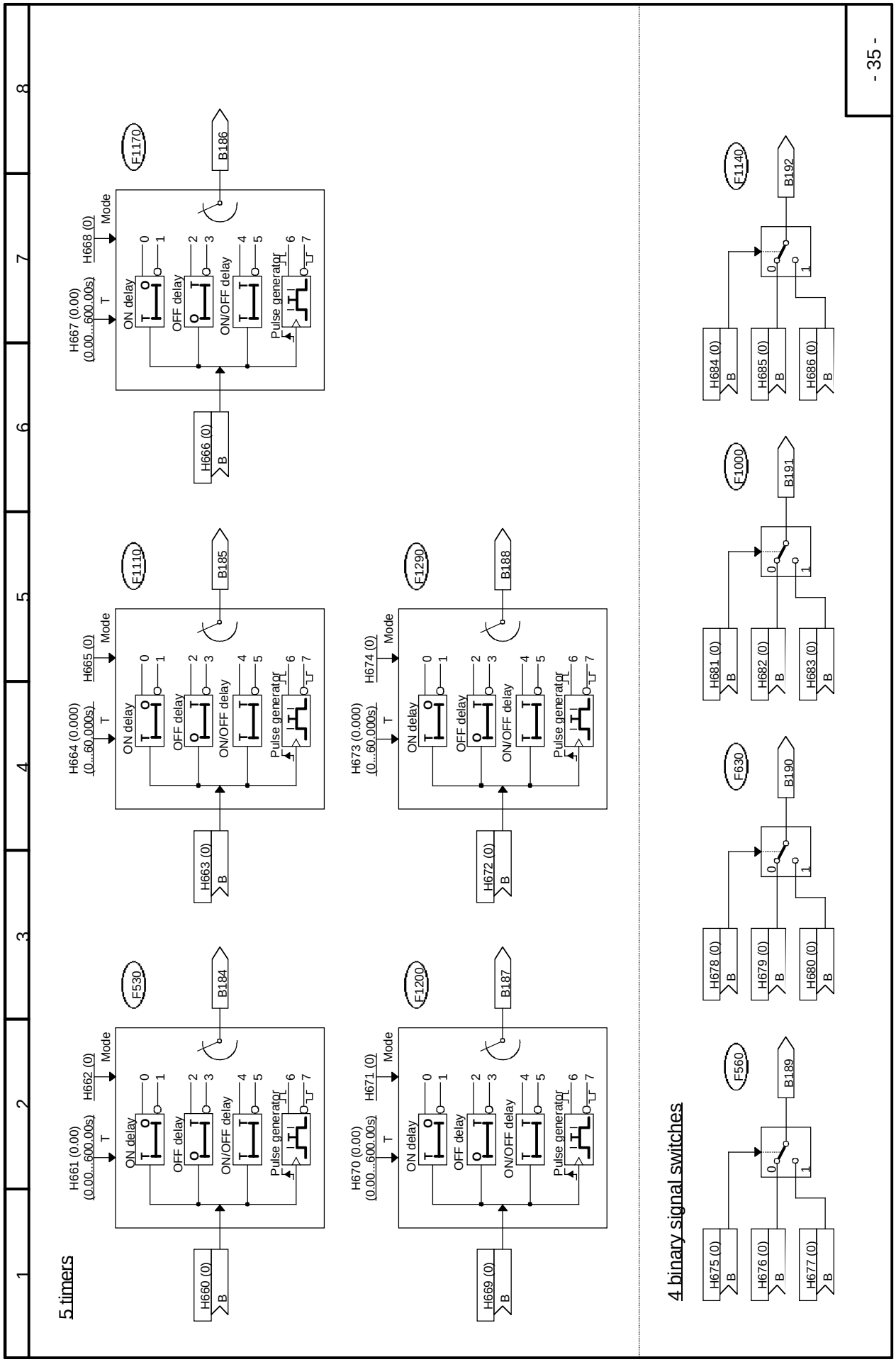
- 35 -
5 timers
4 binary signal switches
H660 (0)
H661 (0.00) (0.00...600.00s)
H662 (0)
F530
B184
H663 (0)
H664 (0.000) (0...60.000s)
H665 (0)
F1110
B185
H666 (0)
H667 (0.00) (0.00...600.00s)
H668 (0)
F1170
B186
H669 (0)
H670 (0.00) (0.00...600.00s)
H671 (0)
F1200
B187
H672 (0)
H673 (0.000) (0...60.000s)
H674 (0)
F1290
B188
H675 (0)
H676 (0)
H677 (0)
F560
B189
H678 (0)
H679 (0)
H680 (0)
F630
B190
H681 (0)
H682 (0)
H683 (0)
F1000
B191
H684 (0)
H685 (0)
H686 (0)
F1140
B192
ON delay
OFF delay
ON/OFF delay
Pulse generator
Mode
T
B

1	2	3	4	5	6	7	8

Parameter set switchover

H703 (012)

Copy function: H703=1xy ⇒ copy parameter set x to parameter set y

H700 (0) B → x1

H701 (0) B → x2

F200

d080 (1...4)

Selected parameter set (Index .01 to .04)

	Pa.r No.	Block dia. [page.col.]	Designation	Factory setting	x1 = 0 x2 = 0 **Index .01** (d080=1) (parameter set 1)	x1 = 1 x2 = 0 **Index .02** (d080=2) (parameter set 2)	x1 = 0 x2 = 1 **Index .03** (d080=3) (parameter set 3)	x1 = 1 x2 = 1 **Index .04** (d080=4) (parameter set 4)
	H210	[8.1]	K020 FixedSetpnt	0.00 %				
	H211	[8.1]	K021 FixedSetpnt	0.00 %				
	H212	[8.1]	K022 FixedSetpnt	0.00 %				
	H213	[8.1]	K023 FixedSetpnt	0.00 %				
	H214	[8.1]	K024 FixedSetpnt	0.00 %				
	H215	[8.1]	K025 FixedSetpnt	0.00 %				
	H216	[8.1]	K026 FixedSetpnt	0.00 %				
	H217	[8.1]	K027 FixedSetpnt	0.00 %				
	H218	[8.1]	K028 FixedSetpnt	0.00 %				
	H219	[8.1]	K029 FixedSetpnt	0.00 %				
	H220	[8.1]	K030 FixedSetpnt	0.00 %				
	H221	[8.1]	K031 FixedSetpnt	0.00 %				
	H222	[8.1]	K032 FixedSetpnt	0.00 %				
	H223	[8.1]	K033 FixedSetpnt	0.00 %				
<1>	H224	[8.3]	K177 FixedSetpnt	0				
	H230	[8.2]	B024 Fixed Bit	0				
	H231	[8.2]	B025 Fixed Bit	0				
	H232	[8.2]	B026 Fixed Bit	0				
	H233	[8.2]	B027 Fixed Bit	0				
	H234	[8.2]	B028 Fixed Bit	0				
	H235	[8.2]	B029 Fixed Bit	0				
	H331	[21.2]	TeCntr ActFilt_s	0.00 s				
	H332	[21.4]	TeCntr R-Time_s	0.000 s				
	H333	[21.4]	TeCntr R-T*1000	0 (=Factor 1)				
	H335	[21.1]	TeCntr C SuppSet	0 %				
	H337	[21.2]	TeCntr SetFilt_s	0.00 s				
	H338	[21.5]	TeCntr PGain	3.00				
	H340	[21.2]	TeCntr PGadpt_x1	0.00 %				
	H341	[21.2]	TeCntr PGadpt_x2	100.00 %				

Continued on next sheet

<1> Parameter H224: starting with software version 1.1

1	2	3	4	5	6	7	8

Parameter set switchover

(continued)

F200

Par No.	Block dia. [page.col.]	Designation	Factory setting	Index .01 (d080=1) (parameter set 1)	Index .02 (d080=2) (parameter set 2)	Index .03 (d080=3) (parameter set 3)	Index .04 (d080=4) (parameter set 4)
H342	[21.1]	TeCntr PGadpt_y1	1.00				
H343	[21.1]	TeCntr PGadpt_y2	1.00				
H344	[21.6]	TeCntr ResetTime	3.000 s				
H345	[21.6]	TeCntr R-T*1000	0 (= Factor 1)				
H347	[21.5]	TeCntr Droop_%	0.0 %				
H348	[21.5]	TeCntr Droop L+	100.00 %				
H349	[21.5]	TeCntr Droop L-	-100.00 %				
H351	[21.6]	TeCntr CntrTyp	0011				
H355	[21.7]	TeCntr Output L+	100.0 %				
H357	[21.7]	TeCntr Output L-	100.0 %				
H359	[21.8]	TeCntr OutptScal	100.0 %				
H400	[23.4]	MOP Op-Mode	0101				
H401	[23.1]	MOP AutoSetpoint	0				
H402	[23.5]	MOP RampUpTime_s	10.00 s				
H403	[23.6]	MOP RampDown_s	10.00 s				
H404	[23.8]	MOP TUp/Down*60	0 (= Factor 1)				
H410	[23.5]	MOP C_SettingVal	0				
H411	[23.7]	MOP WghtFactor	100 %				
H412	[23.7]	MOP dydt TimeDif	10.00 s				
<1> H413	[23.6]	MOP Limit +	100.00 %				
<1> H414	[23.6]	MOP Limit -	-100.00 %				
H421	[24.2]	Wobb Amplitude	0.00 %				
H422	[24.2]	Wobb Frequency	60.0 faults / min				
H423	[24.3]	Wobb Phase-Shift	360 °el				
H424	[24.4]	Wobb PJump neg	0.00 % of H421				
H425	[24.5]	Wobb PJump pos	0.00 % of H421				
H426	[24.6]	Wobb Pls/PausRat	50 % of Tw				
H692	[31.4]	v-n_Cal i g-rat	1.00				
H693	[31.5]	n>v_Calc Diam	216.0 mm				
H694	[31.5]	n>v_Calc n-rated	1450 / min				

<1> Parameters H413 and H414: starting with software version 1.1

3 Function Descriptions

Note: All the functions which are available on the T100 technology board are shown in the block diagrams (Chapter 2).
Chapter 3 does not attempt to provide a full description of these functions, but simply to explain in more detail individual characteristics, which cannot be illustrated properly in a block diagram, together with examples of their application.

3.1 General explanation of terms and functionality

Function blocks

Although the function blocks shown are implemented in digital form (as so-called "software modules"), it is possible to "read" the function charts in a similar way to the circuit diagrams of an analog device.

Configurability

The T100 technology board is characterized by the free configurability of the available function blocks. Free configurability means that the connections between individual function blocks can be selected by means of parameters.

Connectors

All output variables and important operands within the function blocks are available as "Connectors" (e.g. for further processing as input signals in other function blocks). Variables which can be accessed via connectors correspond in nature to the output signals or measuring points in an analog circuit and are identified by their "Connector number" (e.g. K003 = connector 3).
Exceptions: K000 = Fixed value with 0% signal level
K001 = Fixed value with 100% signal level

The internal number notation in the software is: 100% corresponds to 4000 hexadecimal = 16384 decimal. The resolution is 0.006% (step change).
The value range of the connectors is -200% to +199.99%.

Example: The data received via the peer-to-peer connection are available at connectors K057 to K061 (block diagram sheet 17)

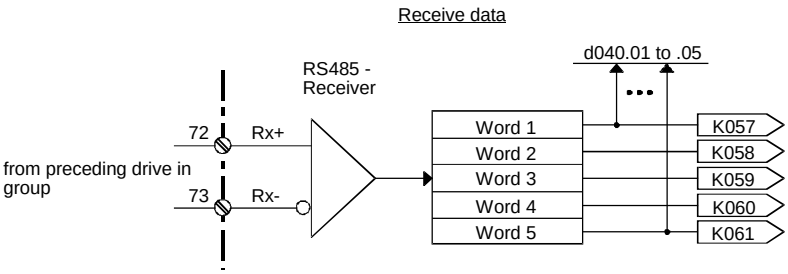

Binectors

All binary output variables and all important binary output signals of the function blocks are available as "Binectors" (connectors for binary signals). Binectors can assume the states log. "0" and log."1". The variables which can be accessed via binectors correspond in nature to the output signals or measuring points in a digital circuit and are identified by their "Binector number" (e.g. B003 = binector 3).
Exceptions: B000 = Fixed value log."0"
B001 = Fixed value log."1"

Example: The status of terminal 77 is available at binector B008 and inverted at binector B009 (block diagram sheet 5)

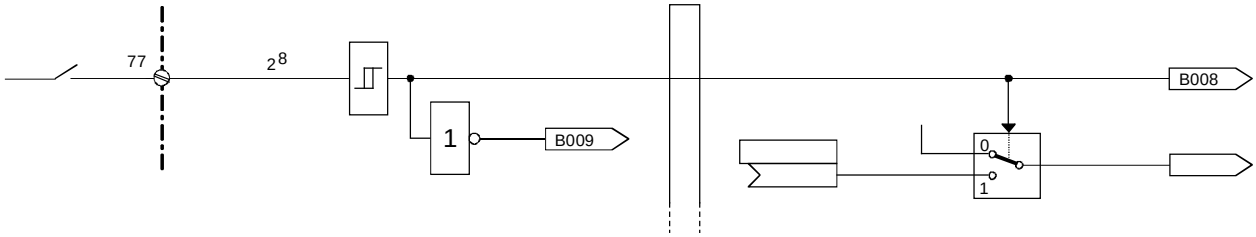

Selector switches, connections

The inputs of the function blocks are defined by means of assigned selection parameters at "selector switches". For this purpose, the number of the connector or binector which is to act as the input quantity is set in the parameter for the relevant selector switch.

Representation in block diagram (examples):

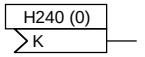

Selection of a connector (represented by "K")
Parameter number = H240, factory setting = 0 (i.e. fixed value 0%)

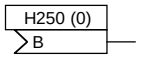

Selection of a binector
Parameter number = H250, factory setting = 0 (i.e. fixed value 0)

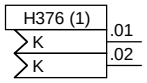

Selection of connectors ("indexed" parameter with 2 indices)
Parameter number = H376, factory setting = 1 (i.e. fixed value 100%; this factory setting applies to all indices of H376)

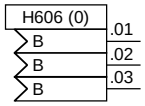

Selection of binectors ("indexed" parameter with 3 indices)
Parameter number = H606, factory setting = 0 (i.e. fixed value 0; this factory setting applies to all indices of H606).

The selected setting can be entered in the empty field(s). The value in brackets next to the parameter number is the factory setting of the selection parameter.

Examples: Examples of how to program connectors and binectors are given below. In addition, a detailed configuring example is given in Chapter 10.

Example 1: As a function of the status of terminal 77 (B008 - see block diagram, sheet 5), analog input 1 (K003 - see block diagram sheet 2) or analog input 2 (K004 - see block diagram sheet 2) must be applied to the output of the 1st analog signal switch (K141 - see block diagram sheet 29).
The sign of this output must then be inverted (sign inverter, see block diagram sheet 25).

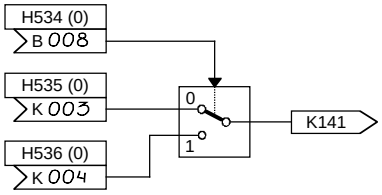

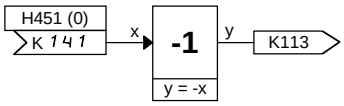

The following settings must be made:

1. H534 = 8: parameterizes binector B008 (status of terminal 77) as the control signal for switchover to the analog signal switch
2. H535 = 3: applies connector K003 (analog input 1) to the 1st input of the switch (switches through when B008 = 0)
3. H536 = 4: applies connector K004 (analog input 2) to the 2nd input of the switch (switches through when B008 = 1)
4. H451 = 141: applies connector K141 (output of analog signal switch) to the sign inverter block

The result is now available at connector K113.

Example 2: The setpoint for the technology controller (see block diagram sheet 21) must be the sum of the simple ramp-function generator output (K151 - see block diagram sheet 30) and analog input 1 (K003 - see block diagram sheet 2).

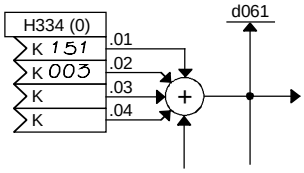

The following settings must be made:

1. H334.Index 1 = 151: applies connector K151 (ramp-function generator output) to the first summation input for the setpoint
2. H334.Index 2 = 3: applies connector K003 (analog input 1) to the second summation input for the setpoint

H334.indices 3 and 4 remain at factory setting (0 = connector K000 = fixed value 0%) and therefore have no effect on the summation operation.

Setting parameters

Apart from the parameters which are used to select a signal (connector, binector), there are also parameters which define an operating mode or the parameter value for some function.

Parameter set switchover:

Some of the parameters (switchover parameter set) have four data sets which can be selected by means of the parameter set switchover function (see block diagram sheet 36). Switchover between these data sets is controlled by the binectors selected in H700 and H701, i.e. depending on the state of these binectors, index.01, .02, .03 or .04 of these parameters may be effective. The parameters in the switchover parameter set must not be confused with other parameters which also (coincidentally) have 4 indices. Such parameters are not affected by the parameter set switchover.

Representation in block diagram:

The value in brackets next to or under the parameter number is the factory setting.

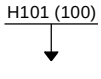

Setting parameter
Parameter number = H101, factory setting = 100



Setting parameter in switchover parameter set
Parameter number = H333, factory setting = 0

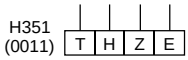

Nibble-coded parameter
Parameter number = H351, factory setting = 0011

Examples: H101 on block diagram sheet 2 defines the signal type of the analog input (voltage input ±10V, current input 0...20mA, current input 4...20mA).

H105 on block diagram sheet 2 determines the filter time for the analog input (adjustable in ms).

H355 on block diagram sheet 21 is a supplementary setpoint which can be added to the setpoint of the technology controller.

H581 and H582 on block diagram sheet 30 both define 10 associated characteristic points in 10 indices.

The operating mode of the technology controller is determined by the ones, tens, hundreds and thousands places of H351 on block diagram sheet 21 (switchover between PI/PID controller, reversal of actual value polarity, setting to 0 of P and I components).

H333 on block diagram sheet 30 applies fixed value 1 or 1000 to the multiplier element for the D component of the technology controller.

Display parameters

The values of certain signals can be displayed in display parameters (d parameters). It is possible to link all connectors to display parameters using connector displays (block diagram sheet 8) and thus to display their values.

Representation in block diagram:



Display parameter
Parameter number = d010

3.2 Sampling times and processing sequence

One characteristic of the T100 technology board as a microprocessor-based controller module is that the individual function blocks are processed sequentially and cyclically at specific time intervals (computing cycle). Consequently, the reaction of a function block to a change in an input quantity will be delayed by up to one computing cycle.

The function blocks of the T100 technology board are processed on 2 time levels with different cycle times:

- Background tasks (background programs) with a computing cycle of 20 ms (i.e. every function block is processed once every 20 ms):

  Representation in block diagram

  

  = Background task 10

  Processing sequence according to task number (B10 before B20 and so on)

- Foreground tasks (foreground programs) with a computing cycle of 2.2 ms (e.g. every function block is processed once every 2.2 ms):

  Representation in block diagram

  

  = Foreground task 10

  Processing sequence according to task number (F10 before F20 and so on)

Since it is possible to configure the available function blocks freely, very long, undesirable signal delays may result if the time sequence in which the blocks are processed (task numbers) is not observed.

For this reason, functions which can be programmed multiply (e.g. 5 adders, 16 AND gates, etc.) are not positioned in the processing sequence so as to be processed chronologically, but are distributed over the computing cycle in such a way (e.g. AND gate 1 = F500 to AND gate 16 = F1570 - see block diagram sheet 32) that it is possible in most cases to include all the desired functions in the processing sequence without incurring long runtimes.

The processing sequence of foreground tasks F200 to F1650 can be altered in parameters H750 to H752 (see also Chapter 4 / parameters H750 to H752).

Starting with software version 1.1 the optimum processing sequence can be implemented by setting H750 = 2.

3.3 Analog inputs

See also block diagram sheets 2 and 3 (Chapter 2) and parameter list (Chapter 4, parameters H100 to H146)

The T100 technology board has 5 analog inputs:
- 2 differential inputs Terminals 50/51 and 52/53
- 3 single-ended inputs Terminals 54/55, 56/57 and 58/59

Signal type

There are three available signal types:
- Voltage input ±10 V
- Current input 0...20 mA
- Current input 4...20 mA

The selection is made via plug-in jumpers and parameters for signal type (see also Tables in block diagram).

Scaling

The %-value which is to represent an input voltage of 10 V or an input current of 20 mA must be set in the scaling parameter.

Example: Analog input terminals 50/51, voltage input, 5V at input must correspond to 100%

Formula acc. to parameter list - parameter H101:
H101[%] = 10V ∗ Y / X where X = input voltage in volts
Y = %-value which represents input voltage X
Therefore: H101 = 10V ∗ 100% / 5V = 200%

Note: In this example, parameter H100 must be set to 0 and plug-in jumper inserted in position 3-4 in order to select the signal type.

Example: Analog input terminals 54/55, current input, 0...20mA at input must correspond to 0...120%

Formula acc. to parameter list - parameter H121 (H101):
H121[%] = 20mA ∗ Y / X where X = input current in mA
Y = %-value which represents input current X
Therefore: H121 = 20mA ∗ 120% / 20mA = 120%

Note: In this example, parameter H120 must be set to 1 and plug-in jumper X3 inserted in position 1-2 in order to select the signal type.

See parameter list and block diagram for setting of other parameters.

3.4 Analog outputs

See also block diagram sheet 4 (Chapter 2) and parameter list (Chapter 4, parameters H150 to H165)

Signal type

There are three available signal types:
- Voltage output ±10 V
- Current output 0...20 mA
- Current output 4...20 mA

The selection is made via plug-in jumpers and parameters for signal type (see also Tables in block diagram).

Scaling

As regards the scaling parameter setting (H153/H163), it is assumed that "voltage output" is selected as the signal type (as if H155/H165 = 0). When the signal type actually selected is a current output, then an output voltage of 0...10V must correspond to an output current of 0...20mA (with signal type 1) or 4...20mA (with signal type 2).

$$H153(H163) = \frac{\Delta y[V]}{\Delta x[\%]} * 100\%$$

In this case Δy = change in output voltage in [V] in line with above assumption
Δx = associated change in input quantity in [%]
(scaling of input quantity: 16384 = 100%)

Offset

The voltage value set in the offset parameter is added to the output voltage according to the above assumption.

Example: Analog output 1 (terminal 61/62) as voltage output
A value range of -25% ... +25% for the connector selected with H150 (internal representation = -4096...+4096) must be mapped to the 0...10V voltage range at the analog output.

1. Scaling:
Δy = 10V - 0V = 10V
Δx = +25% - (-25%) = 50%
H153 = 10V ∗ 100% / 50% = 20.00V

2. Offset:
The output voltage must be +5V with an input quantity of 0%
Therefore H154 = 5.00V

3. Signal type:
Signal type H155 = 0 is set for the voltage output
Plug-in jumper X6 is inserted in position 2-3

Example: Analog output 2 (terminals 63/64) as current output
A value range of 0 ... -25% for the connector selected with H160 (internal representation = 0...-4096) must be mapped to the 4...20mA current range at the analog output.

1. Scaling:
Output 4...20mA corresponds with voltage output 0...10V to
Δy = 10V - 0V = 10V
Δx = -25% - 0% = -25%
H163 = 10V ∗ 100% / (-25%) = -40.00V

Note: By setting H161=2, the input value range could be converted to 0...+25%, in which case the scaling would need to be set to +40. 00V.

2. Offset:
The output current must be 4mA with an input quantity of 0% (corresponds to 0V with voltage output)
Therefore H164 = 0.00V

3. Signal type:
Signal type H165 = 2 is set for current output 4...20 mA
Plug-in jumper X7 is inserted at position 1-2

3.5 Serial USS® interface (interface 1; X132, terminals 65 ... 69)

On T100 boards equipped with the "Multi-Purpose Drive" software module, the SIEMENS USS® protocol is implemented for serial interface 1. The USS® protocol is used in all Siemens digital converter devices and permits a point-to-point or a bus-type link to be made to a master station. Any mix of converter types may be linked to the bus. The USS protocol permits access to all relevant process data, diagnostic information and parameters of the T100 and Master Drives basic converters.

Interface hardware
The hardware for the USS interface is designed according to the RS485 standard. The terminal assignments are shown on block diagram sheet 1. The interface is non-floating and operates with a 2-wire lead in half duplex mode. The positive and negative terminals of the 2-wire lead are connected in parallel to terminal pairs 65/66 and 67/68; this allows the incoming and outgoing bus leads to be connected to separate terminals with only one wire connected to each terminal instead of two. A maximum of 32 nodes (1 master and max. 31 slaves) can be connected in the bus configuration. The baud rate can be set between 300 baud and 187500 baud in parameter H293.

The maximum length of the bus cable is 1000 m in total, but only 500 m for a baud rate of 187500. The cable must be terminated with terminating resistors (see Fig. 3.5) on the two nodes which are situated at the beginning and end of the bus. These resistors can be activated by resetting plug-in jumpers X8 and X9 to setting 1-2 on the T100. The bus terminating resistors must be deactivated on all nodes situated between the "terminals". Tap lines may not be inserted in the USS bus circuit. Document /6/ listed in the documentation index in Chapter 11 provides further information about the bus circuit arrangement and instructions on how to achieve noise-proof interface wiring.

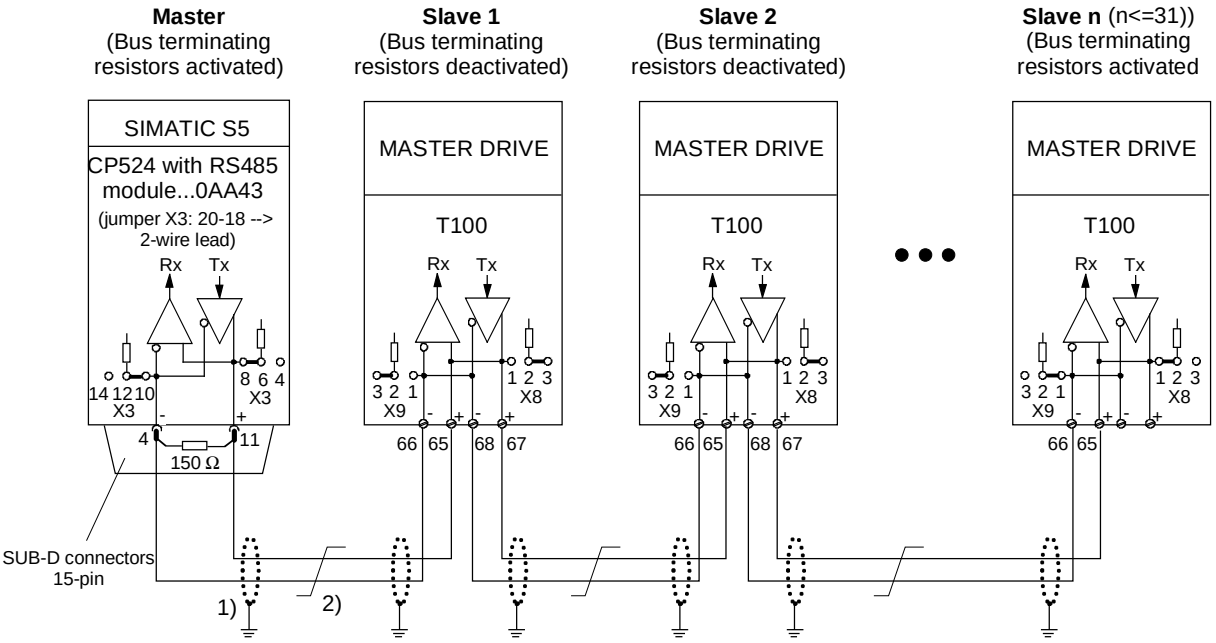

Fig. 3.5: Wiring example for a USS bus

1) The screens of the interface cables must be connected in a low-impedance connection to the device or cubicle earth directly on the units (e.g. via a clamp)
2) Twisted pair cable, e.g. LIYCY 2x0,5 mm2; an equipotential bonding lead must be provided for longer cables to ensure that the difference in the ground potentials between the link partners remains below 7 V.

Further details about USS protocol
The USS protocol ("Universal Serial Interface Protocol") is a powerful, reliable communications protocol with an extremely low management overhead. It is the ideal protocol for use in drive systems where real-time requirements are often extreme. The structure of the USS protocol is specified in document /6/ (see Chapter 11).

Potential USS link partners

The USS protocol is a pure master-slave protocol. With this protocol, a converter can only ever function as a slave. The converter only transmits a message to the master if it has received a message from the master beforehand. Converters cannot therefore exchange data directly with one another via the USS protocol (this can only be done with a peer-to-peer connection, see Chapter 3.6).

The following master stations are currently available as link partners for the USS protocol:

1. SIMATIC S5 - 115U/ -135U/ -155U with
- Communications processor CP524 (for wiring example, see Fig. 3.5)
- RS485 interface module for CP524 (e.g. Order No. 6ES5752-0AA43)
- Special driver "Parameterizable Master-Slave Procedure" for CP524
  (Order No. for German-language version: 6ES5897-2MB11)
  (Order No. for English-language version: 6ES5897-2MB12)
- EPROM memory module for CP524 for storing special driver
  (Order No. : 6ES5373-1AAx1; storage capacity x >= 1)
- Parameterizing software COM525 for CP524
  (Order No. for German-language version: 6ES5895-4SA11)
  (Order No. for English-language version: 6ES5895-4SA21)
- Software package DVA_S5 with SIMATIC communications blocks for data exchange between SIMATIC S5 and SIMOREG/SIMOVERT converters (see /4/ and /5/ in Chapter 11)

2. SIMADYN D with
- Communications module CS7 ("carrier module" for SSx submodules)
- Communications submodule SS4 for the CS7
- Interface submodule SS31 (RS485 hybrid) for SS4
  (max. baud rate: with SS4 from and incl. release "T": 187.5 kbaud
  with releases earlier than SS4: 19.2 kbaud)

3. Non-Siemens computers
- The USS protocol is described in detail in document /3/ for users who wish to write their own master driver. This has been put into practice successfully in the past and is relatively simple to implement thanks to the simple and easy-to-understand structure of the USS protocol.

Software packages for the following master stations are currently being prepared:

4. SIMATIC S5 -95U with
- Communications processor CP521
- USS protocol and drive communications blocks (are being integrated into software package /4/ DVA_S5; available from end of 1995)
- Interface converter RS232 ⇒ RS485 (e.g. Siemens SU1)

5. SIMATIC S5 -95U with second serial interface and
- USS protocol and drive communications blocks
- Cable for TTY ↔ V.24 conversion (Order No. 6ES5 734-1BD20)
- Interface converter RS232 ⇒ RS485 (e.g. Siemens SU1)

6. SIMATIC S7 -200 (CPU214) with
- USS protocol and drive communications blocks

7. SIMATIC S7 -300 with
- Communications processor CP340
- USS protocol and drive communications blocks
- Configuring software for CP340
  (Order No. for German-language version: 6SE7 340 - 1AH00 - 7AA0)
- Interface converter RS232 ⇒ RS485 (e.g. Siemens SU1)

8. SIMATIC S7 -400 with
- Communications processor CP441 - 1
- Interface module IF963 - X27 (RS232 / RS485) Order No. 6SE7 963 - 3AA00 - 0AA0
- USS protocol and drive communications blocks
- Configuring software for CP441 - 1
  (Order No. for German-language version: 6SE7 441 - 2AA00 - 7AG0)

9. PC with
- SIEMENS USS driver software (offers a programming interface to user programs written in C and a simple, hexadecimal test operator interface; available from end of 1995)
- Interface converter RS232 ⇒ RS485 (e.g. Siemens SU1)

Important note:

The necessary USS protocol and drive communications software will be integrated in the appropriate software package (DVA_S5, DVA_S7 or DVA_PC) after completion of the tests and approval. Please contact your nearest Siemens sales office if you would like to use one of these software packages 4 ... 9. We will be pleased to provide you with further details about their availability.

Important note

At the time of compilation of this software manual, only the link variants described in paragraph 1 (SIMATIC S5-115U/-135U/-155U) and paragraph 2 (SIMADYN D) had been tested with the T100 and approved. Please contact your nearest Siemens sales office if you would like to use one of the other variants.

User data which can be transferred via USS protocol
Document /6/ contains detailed information about the application of the USS protocol in the Master Drives devices.

The user data connections and the parameters relevant to configuring the USS interface on the T100 are shown in block diagram, sheet 16.

If you wish to read or write parameters of the basic converter and T100 via the USS interface, then H295 must be set to 3, 4 or 127 (only select setting 4 to transfer double-word parameters). H295 = 0 must be set if no parameters are to be transferred. Changes to parameters can be made via the USS protocol only if the T100 has been enabled for parameterization via basic unit parameter P53 (P53:= "0ld value + 16"). Parameters can always be read regardless of the setting in P53.

The number of process data words to be transferred is basically identical for both the send and receive direction and can be input via H294. The number notation "100% corresp. to 4000h = 16384d" applies for all connectors. If setpoints and control commands must be forwarded to the basic unit, then basic unit control bit 10 "Control requested" must be set to "1" (see block diagram, sheet 11).

Notation of parameter numbers and values on serial interfaces
The numbers of the technology parameters (H and d parameters) are preceded by a "1" to distinguish them from the numbers of the basic unit parameters (r and P parameters), i.e. they differ by an offset of 1000d (example: "d041 is addressed on the serial interface with the number 1041d and "H343" with the number 1343d).

The number notation of a parameter value depends on the parameter "type" specified in each case in the parameter list. The various parameter types are explained at the beginning of the list. The parameters are always transferred in the form in which they are specified in the "value range" column of the parameter list, but with the decimal point (if any) omitted. (Example: Display value 123.45 --> the number 12345d = 3039h is transmitted via the interface). Further information on parameter transmission via the serial interfaces can be found in Chapter 4.2 and document /6/.

Diagnosis and monitoring functions for the USS interface
All user data words which have been sent or received can be checked in display parameters d035 and d036 (directly at the internal software interchange point between USS driver and T100 user software).
Diagnostic parameter d037 provides information about the time intervals between error-free and errored messages and indicates the nature of any communications errors.

It is possible to set a time monitoring function in H291 which results in a fault trip with F117 in the case of a timeout. This fault message can be acknowledged even if the fault status is permanent. This ensures that the drive can always continue operation in manual mode even if the USS interface has failed.

Broadcast messages with USS protocol
Broadcast messages are supported by the T100 as specified in the documentation /3/ (Chap.12). A broadcast message allows an (identical) setpoint or control command to be output simultaneously to all USS slaves on the bus which support the broadcast function. The above-mentioned software package DVA_S5 for the SIMATIC does not, however, support the broadcast function at the present time.

3.5.1 Operation of USS protocol according to the PROFIBUS user profile (e.g. with block package DVA_S5)

We can supply communications software for the automation system (e.g. DVA_S5, see /4/) to permit the T100 to be operated with the USS protocol or with an additional communications module (e.g. SIMATIC S5/S7, SIMADYN D, etc.). These module packages support the PROFIBUS "Variable-speed drives" application profile (see /7/). Defined characteristics are consequently essential for certain process data elements.
We therefore recommend implementing the following settings on the T100 if our module packages are used:

a) Position of main control word and main status word
Word 1 of the T100 receive data should always be used as the main control word (connector K161, see block diagram sheet [16.4]).
Word 1 of the T100 receive data should always be used as the main status word (applies to connector selected via H296.01 [16.5]).

b) Control bit 10 ("Control requested")
Control bit 10 should be "wired through" directly from the USS receive data area to the basic unit. For this purpose, for example, bit 10 of K161 [16.4] must be isolated by means of a connector/binector converter and supplied to the basic unit via H272.11 [11.2].

With a "1" status of bit 10, the automation system declares all its setpoints and control commands to be valid and requests the converter to accept them.

Bit 10 is not directly supported on the T100, i.e. the setpoints and control commands from the automation system which are connected to the T100 are always accepted regardless of bit 10 (but can, of course, be disabled or enabled on the T100 as a function of bit 10 if required). However, since the basic unit does not accept any setpoints or control commands at its dual-port RAM as long as the "wired-through" bit 10 is "0", it can always be guaranteed that no hazardous situations will arise.

c) Status bits 3, 7 and 9
The following status bits should be "wired through" from status word 1 of the basic converter to word 1 of the USS transmit area (see [13.7]):

- Bit 3 "Fault" (binector B035)
- Bit 7 "Alarm" (binector B039)
- Bit 9 "Unit requests process data control from automation system" (binector B041)

These binectors should be connected to bits 3, 7 and 9 of the connector which can be selected via H296.01 16.5], thus ensuring that the communications display word in DVA_S5 is updated.

d) Adjustable length of process data area for USS messages
The process data area for USS messages can be between 0 and 10 words in length. When the length is "0", points a) to c) of this section do not apply and bits 6, 7 and 8 of the communications display word in the SIMATIC are not updated in DVA_S5.

3.6 Serial peer-to-peer interface (interface 2, X133, terminals 70...74)

Application of peer-to-peer interface
The peer-to-peer interface designed by Siemens is implemented as serial interface 2 on the T100 for the software module "Multi-Purpose Drive".

"Peer-to-peer connection" means "Connection between equal partners". In contrast to the classic master-slave bus systems (e.g. USS and PROFIBUS), the peer-to-peer connection allows one converter to be both the master (setpoint source) as well as the slave (setpoint drain). Similar arrangements which have no definitive master are also common today in small computer networks (e.g. MS-WINDOWS for Workgroups ®).

The peer-to-peer connection allows signals to be transferred from converter to converter in fully digitized form. Examples:

- **Velocity setpoints** for generating a setpoint cascade, e.g. for paper and foil machines, for wire-drawing machines as well as textile drawframes

- **Torque setpoints** for load distribution controls of drives which are coupled mechanically or via the material, e.g. line-shaft drives of a printing press or S-roller drives

- **Acceleration setpoints (dv/dt)** for acceleration feedforward control for multi-motor drives.

In the past, these types of signals were mostly transmitted as analog signals (-10V to +10V) from converter to converter.

Advantages of peer-to-peer interface
The peer-to-peer offers the following advantages:

- **Fully digitized signal transmission from converter to converter**
  Converters no longer need to exchange output signals with one another. These signals are transferred in fully digitized form via the peer-to-peer connection on all new digital converters supplied by SIEMENS. Offset errors, drift errors and hum effects are now a thing of the past. The signal resolution is 0.006%, a level of resolution which would be extremely expensive to implement via analog inputs/outputs.

- **Less wiring**
  The peer-to-peer connection helps to reduce the amount of wiring required. A 2-wire lead can carry up to 5 signals over a distance of up to 1000 m.

- **Transmission of control commands**
  It is also possible to transfer control commands and status bits via the peer-to-peer connection (see Section "User data which can be ....."

- **Reliable data transmission**
  The peer-to-peer connection is reliable. Every peer-to-peer message is provided with data saving information which is evaluated by the receiver. A wire break or the failure of a node is detected and signalled immediately (see Section "Diagnosis and monitoring")

- **Relief of load on control system**
  As the application example for a multi-motor drive system below illustrates, the peer-to-peer connection can relieve the load on the control system by performing a large number of high-speed setpoint calculations. Autonomous operation without any control system is also possible. The drives are able to organize high-speed setpoint distribution via the connection independently of any control system.

Interface hardware and peer-to-peer protocol
Peer-to-peer communication takes place via a non-floating, RS485 4-wire interface with separate transmit and receive connections. The terminal assignments are shown on block diagram sheet 1. A high-speed, special SIEMENS protocol requiring nominal administration is used. The transmission rate can be set in H302 to between 300 and 187500 baud and the message length in H303 to between 1 and 5 words. The baud rate and message length apply equally to the receive and transmit directions and must be set to the same values for all the link partners. Examples of the net transmission rate from one drive to the next are given in the following table as a function of the set transmission rate and message length.

Message length (words of 16 bits each)	Baud rate	Net transmission time Peer-to-peer connection
5 words	187.5 kbd	1 msec
2 words	187.5 kbd	0.5 msec
5 words	38.4 kbd	4 msec
2 words	38.4 kbd	2 msec
5 words	19.2 kbd	8 msec
2 words	19.2 kbd	4 msec
2 words	9.6 kbd	8 msec
1 word	9.6 kbd	5.7 msec

Every drive is able to receive data from the preceding drive in the group via its peer receive-connection and transmit data to one (or several) drives connected after it in the group via its transmit-connection. The section headed "Possible connection types" shows the possible configurations of the peer-to-peer connection.

The maximum cable length of a peer-to-peer connection from the transmitter to the last receiver connected to the same transmit output is 1000 m, but only 500 for a baud rate of 187500.

Bus terminating resistors are soldered in at the transmit output of the peer-to-peer connection. You can activate the terminating resistors on the receive input by re-positioning plug-in jumpers X10 and X11 to setting 1-2; in the case of a "parallel connection", this may only be done on the last device connected (see Section "Possible connection types..." and the hardware operating instructions of the T100 /1/).

Potential peer-to-peer link partners
The following devices can be operated together with T100 boards in a peer-to-peer connection:

- Other MASTER DRIVES devices with T100, T300 or SCB2 supplementary board
- SIMOREG series 6RA24 converters.

It must be noted that the high baud rates of the T100 and the full scope of message length settings are not implemented on all these link partners (example: The message length is preset to 5 words for the 6RA24).

User data which can be transferred via peer-to-peer connection
The user data connections and the relevant parameters for configuring the peer-to-peer connection are shown on block diagram sheet 17. You can select any connectors to act as transmit data (number notation: 100% corresponds to 4000h = 16384d).

The peer-to-peer connection is not only capable of transferring word variables ("analog signals") but also control commands and status bits which can be "wired into" a transmit word by means of a binector/connector converter (block diagram sheet 20). If setpoints and control commands must be forwarded to the basic converter, control bit 10 of the basic unit ("Control requested") must be set to "1" (see block diagram sheet 11). It is not possible to transmit parameters via the peer-to-peer connection.

Diagnosis and monitoring for the peer-to-peer connection
All user data words which have been sent or received can be checked in display parameters d040 and d041 (directly at the internal software interchange point between peer driver and T100 user software). Diagnostic parameter d042 provides information about the time intervals between error-free and errored messages and indicates the nature of any communications errors.

It is possible to set a time monitoring function in H301 which results in a fault trip with F118 in the case of a timeout. This fault message can be acknowledged even if the fault status is permanent. This ensures that the drive can always continue operation in manual mode even if the peer-to-peer interface has failed.

With the "Series connection" (Fig. 3.6.2), the first drive in the peer string can monitor the entire string if the transmit cable of the last drive is coupled back to the receive input of the first drive.

Example of application of peer-to-peer connection
Fig. 3.6.1 shows a section of a foil-coating plant.

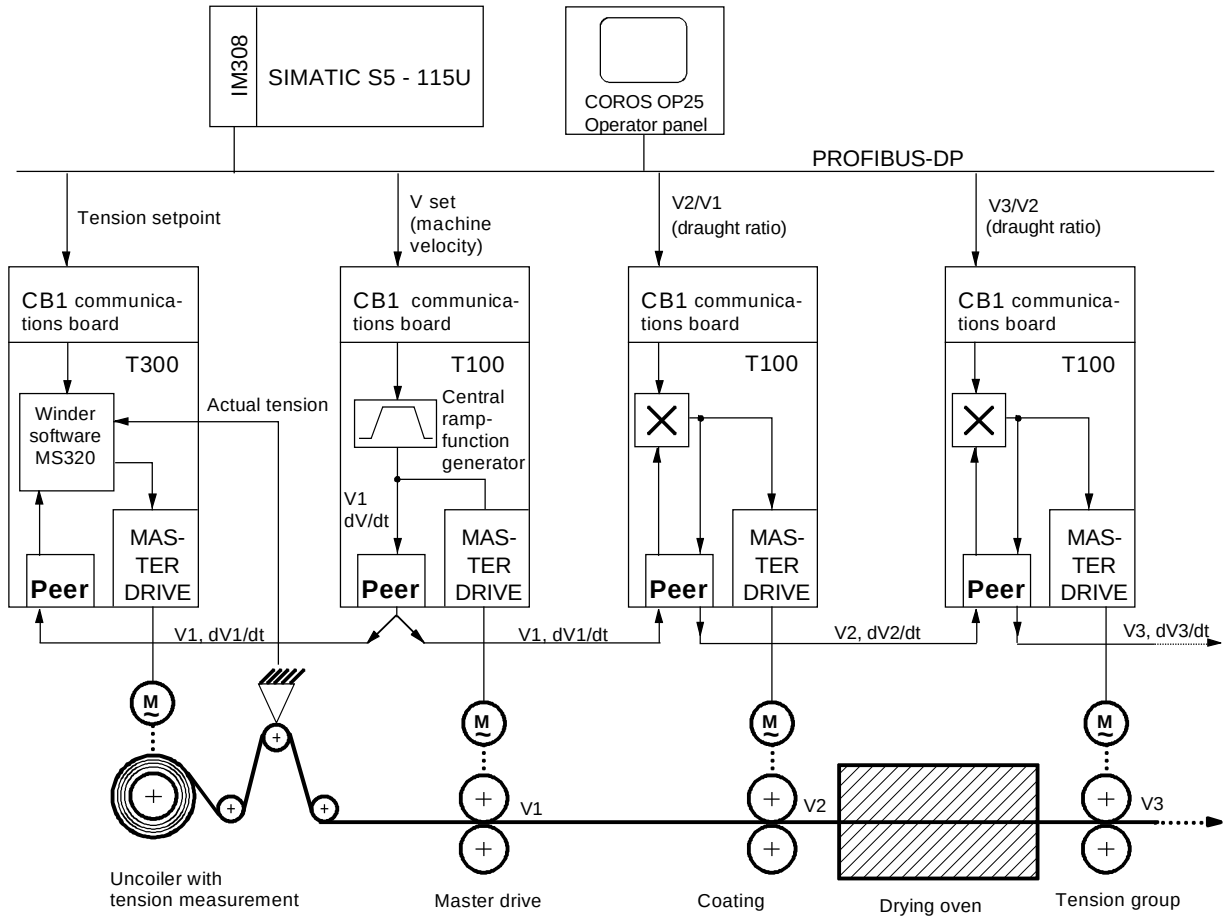

Fig. 3.6.1: Example of the application of a peer-to-peer connection in a foil-coating plant

(The entire installation runs up and down automatically via the central ramp-function generator implemented in the master drive.)

All converters are linked to a SIMATIC S5 control system via a PROFIBUS-DP (a USS bus can, of course, be used in place of the PROFIBUS-DP which means that the PROFIBUS-DP interface CB1 can be omitted on the drives with a T100).

The master drive receives the machine velocity setpoint Vset via the PROFIBUS-DP. The other drives receive their individual draught ratios or tension setpoints via the PROFIBUS-DP

The drives which are interlinked via the peer-to-peer connection form an autonomous setpoint cascade and automatically follow the specified velocity setpoint Vset via the central ramp-function generator implemented in the master drive.

The setpoints are therefore transferred automatically at high speed from drive to drive via the peer-to-peer connection without any interference from the master system.

The master system is therefore relieved of the task of specifying time-critical setpoints during ramp-up and ramp-down operations and is only responsible for transferring the following signals, which rarely change, to the drives:

- Setpoint Vset to which the machine as a whole must run up or down
- Start command for central ramp-function generator in master drive
- Tension setpoints for tension-controlled drives
- Draught ratios for individual drives as a function of processed material and occasional interventions by the machine operator via the operator panel
- Control signals for converter control, e.g. ON/OFF commands

Possible types of peer-to-peer connection
The peer-to-peer connection is flexible. Figs. 3.6.2 to 3.6.4 show the 3 possible types of peer-to-peer connection.

- The signals can flow through the drives in a **series connection** (Fig. 3.6.2); with this connection type, each drive processes the data as required before passing them on to one other drive (classic setpoint cascade).

- In a **parallel connection** (Fig. 3.6.3), a total of 31 drives can be connected in parallel to the transmit cable of one drive. All these drives receive their (identical) data sets simultaneously. The signal delay time of approximately 1 to 10 msec (see table above) occurs only once with the parallel connection.

- Any desired **mixed combinations** of series and parallel connections can be implemented. Fig. 3.6.4 shows an example of this type of connection.

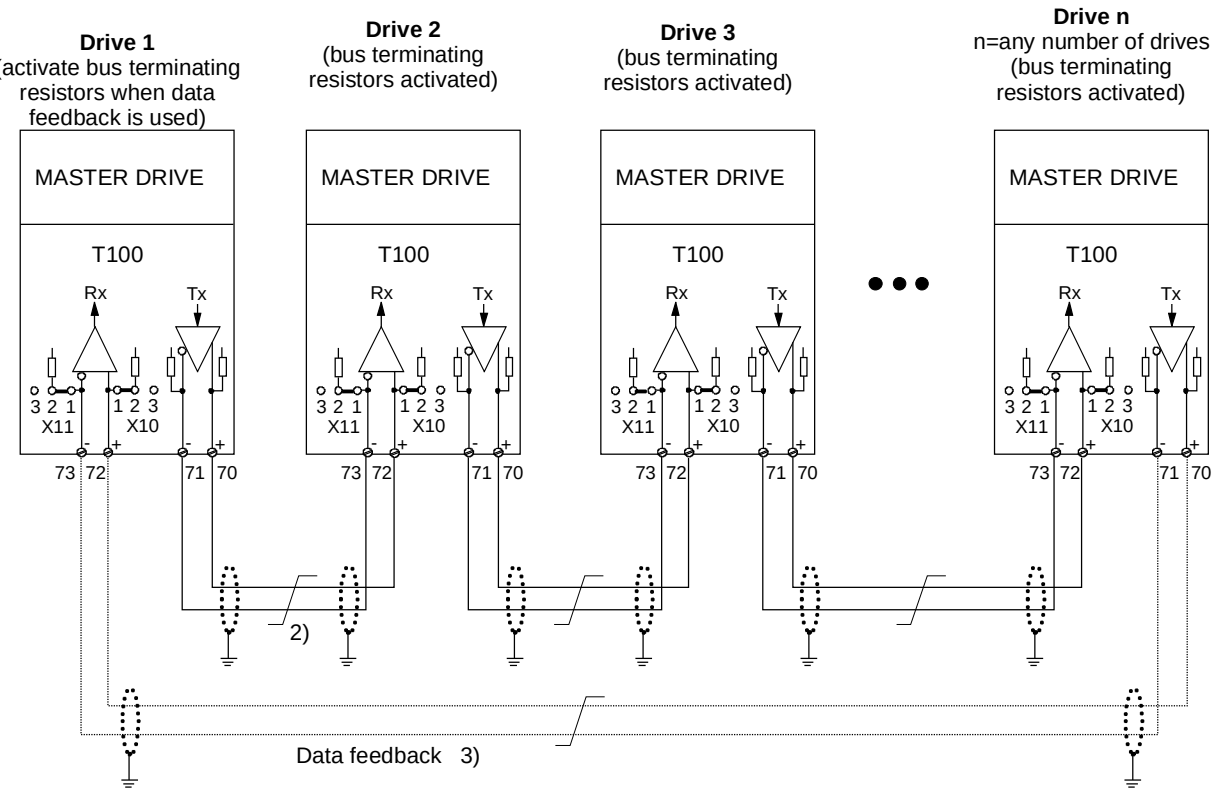

Fig. 3.6.2: Peer connection type "Series"

Every drive receives its own individual setpoint from the preceding drive in the group (classic setpoint cascade)

1) The screens of the interface cables must be connected directly to the units in a low-impedance connection to the device or cubicle earth (e.g. via a clamp).
2) Twisted-pair cable, e.g. LIYCY 2x0,5 mm2; an equipotential bonding lead must be provided for longer cables to ensure that the difference in the ground potentials between the link partners remains below 7V.
3) Optional data feedback which allows drive 1 to monitor the operation of the entire peer string.

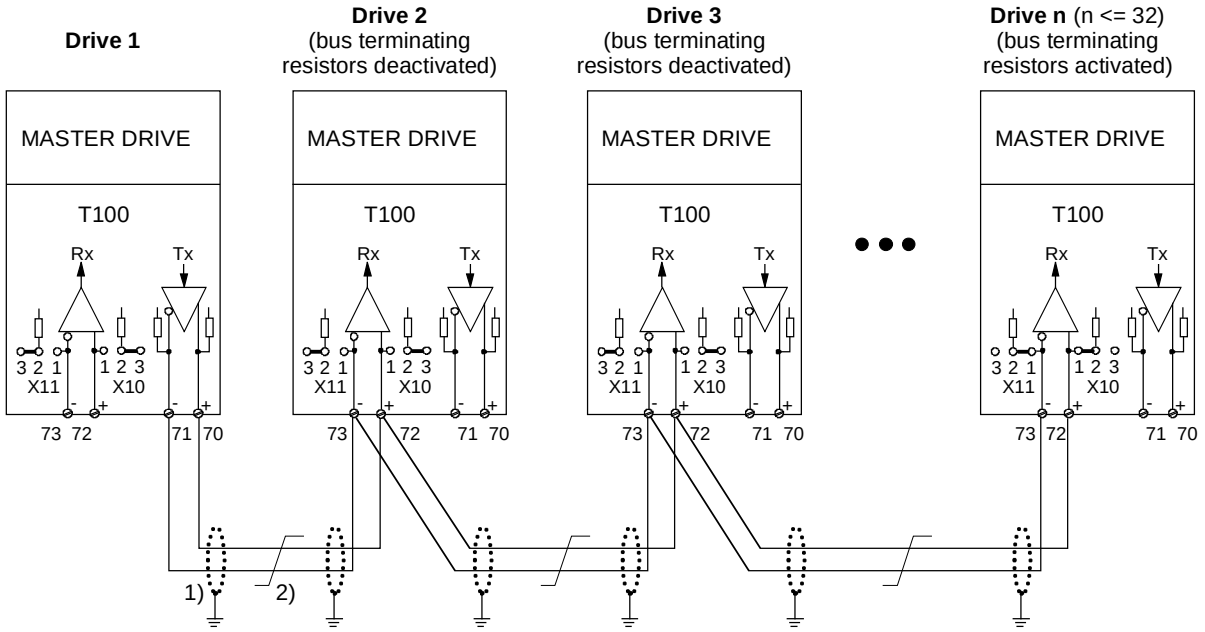

Fig. 3.6.3: Peer connection type "Parallel"

Up to 31 drives receive identical setpoints from drive 1

1), 2): see Fig. 3.6.2

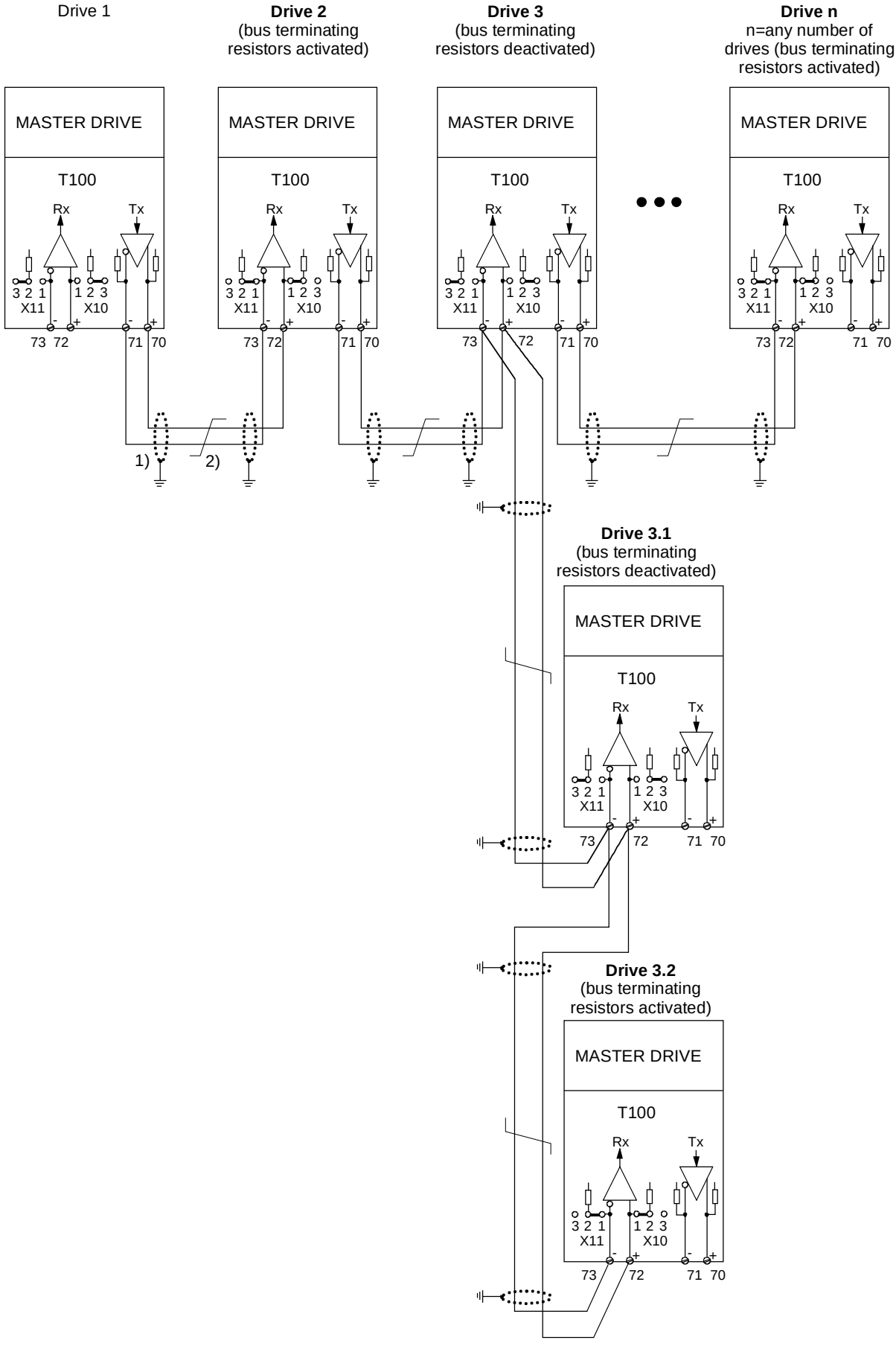

Fig. 3.6.4: Peer connection type "mixed combination"

Drives 1 to n are arranged in a series combination.
The three drives 3, 3.1 and 3.2 form a combined group; they are linked in a parallel connection to drive 2 and receive identical setpoints from this drive.
1), 2) see Fig. 3.6.2.

3.7 Operation with a communications board type CBx or SCBx

At the present time, the T100 can be operated in conjunction with one of the following communications boards which must be mounted in slot 3 of the electronics box:

- **CBx:** Field bus interface, e.g. CBP / CB1 for PROFIBUS DP, CBC for CAN bus, etc.

- **SCB1:** Interface board with fibre-optic connection for either a serial I/O system with SCI1/2 (terminal extension) or a peer-to-peer connection

- **SCB2:** Interface board with floating RS485 interface for USS protocol or peer-to-peer connection

IMPORTANT: The T100 cannot be operated with a communications board mounted on the CU board (in slot A or C)!
If you are using a T100 board, it is absolutely essential to insert communications board SCBx / CBx in location 3 or in the lower slot (slot G) of an ADB adapter board mounted in location 3!.

Interconnection of process data

Data are exchanged with a communications board - and therefore also with the connected communications partners - via a DUAL PORT RAM located on the CBx /SCBx (see block diagram sheet 1). This means that data which have to be exchanged with the basic unit must flow through the technology board.

If a communications board is installed, the technology board is responsible for distributing the data from the CBx /SCBx to the basic unit as well as to its own software functions and vice versa. The process data from the CBx / SCBx are not connected on the basic unit (e.g. via P664, P690 and P694), but on the T100 by means of the mechanisms shown on sheet 18 of the block diagram.

a) COM BOARD → T100
The meaning of the data received from the COM BOARD depends on which COM BOARD is installed as well as on the selected interface protocol. The following list provides an overview of the COM BOARDS which are currently available.

Data received from COM BOARD on T100 board	from CB1	from SCB1 with SCI board(s)	from SCB2 with USS	from SCB1, SCB2 with peer-to-peer	Applied to connector:
Word 1	PZD 1 in setpoint channel	Binary inputs, slave 1 Bit 0: Bin. input 1 Bit 1: Bin. input 2 etc. Bit 15: Bin.input 16	PZD 1 in setpoint channel	PZD 1	→ K062
Word 2	PZD 2	Analog input 1, slave 1	PZD 2	PZD 2	→ K063
Word 3	PZD 3	Analog input 2, slave 1	PZD 3	PZD 3	→ K064
Word 4	PZD 4	Analog input 3, slave 1	PZD 4	PZD 4	→ K065
Word 5	PZD 5	Binary inputs, slave 2 Bit 0: Bin. input 1 Bit 1: Bin. input 2 etc. Bit 15: Bin.input 16	PZD 5	PZD 5	→ K066
Word 6	PZD 6	Analog input 1, slave 2	PZD 6	Undefined	→ K067
Word 7	PZD 7	Analog input 2, slave 2	PZD 7	Undefined	→ K068
Word 8	PZD 8	Analog input 3, slave 2	PZD 8	Undefined	→ K069
Word 9	PZD 9	Undefined	PZD 9	Undefined	→ K070
Word 10	PZD 10	Undefined	PZD 10	Undefined	→ K071

The process data received from the COM BOARD "arrive" in connectors K062 to K071. They do not, therefore, go straight to the basic converter. They need to be connected for transfer to the basic unit on the T100. The basic unit is only able to receive T100 process data, a point which must be noted when process data connections are made on the basic unit.

b) T100 → COM BOARD
The meaning of the data sent to a COM BOARD depends on the type of COM BOARD used and on the selected interface protocol. The following lists provides an overview of the currently available COM BOARDs.

Selection parameter	Data sent to COM BOARD by T100	→ CB1	→ SCB1 with SCI board(s)	→ SCB2 with USS	→ SCB1, SCB2 with peer-to-peer
H311.01 →	Word 1	PZD 1 in actual-value channel	Binary outputs, slave 1 Bit 0: Bin. output 1 Bit 1: Bin. output 2 etc. Bit11: Bin.output 12	PZD 1 in actual-value channel	PZD 1
H311.02 →	Word 2	PZD 2	Analog output 1, slave 1	PZD 2	PZD 2
H311.03 →	Word 3	PZD 3	Analog output 2, slave 1	PZD 3	PZD 3
H311.04 →	Word 4	PZD 4	Analog output 3, slave 1	PZD 4	PZD 4
H311.05 →	Word 5	PZD 5	Binary outputs, slave 2 Bit 0: Bin. output 1 Bit 1: Bin. output 2 etc. Bit11: Bin.output 12	PZD 5	PZD 5
H311.06 →	Word 6	PZD 6	Analog output 1 slave 2	PZD 6	No destination
H311.07 →	Word 7	PZD 7	Analog output 2, slave 2	PZD 7	No destination
H311.08 →	Word 8	PZD 8	Analog output 3, slave 2	PZD 8	No destination
H311.09 →	Word 9	PZD 9	No destination	PZD 9	No destination
H311.10 →	Word 10	PZD 10	No destination	PZD 10	No destination

Process data sent to the COM BOARD are connected via parameter H311. They do not, therefore, arrive directly from the basic unit. The process data sent by the basic unit (actual values) must be connected on the T100 for transfer to the COM BOARD. The COM BOARD is only able to receive T100 process data. This must be noted when process data connections are made on the basic unit.

Note: If setpoints and control words must be transferred to the basic unit, then control bit 10 "Control requested" of the basic unit must be set to "1" (see sheet 11 of block diagram).

Please see Chapter 5 for the number notation of the process data (connectors).

Access to parameters via CBx / SCBx

It is possible to access all parameters of both the T100 (dxxx and Hxxx) and the basic unit (rxxx and Pxxx) via the CBx/SCBx (exception: SCB1). Write access to parameters can be obtained, however, only if the CBx /SCBx has been enabled for parameterization via P053 (P053=n+1 for CBx or P053=n+8 for SCBx).
With regards to the notation of parameter numbers and values, the information given in Chapters 3.5 and 4.2 applies.

Configuration of CBx / SCBx on MASTERDRIVES MC / VC from 1997 / 98

Even if a T100 board is installed, the CBx is configured by means of the following basic unit parameters:
- P711 ... P721 if CBx is installed
- P696 ... P705 if SCBx is installed

These configuring parameters are "pushed through" the T100 to the CBx /SCBx when the Master Drives unit is switched on and after their settings have been altered.

Diagnosis and monitoring of CBx / SCBx on MASTERDRIVES MC / VC from 1997 / 98

Parameters r731 and r958 provide important diagnostic information about the CBx. Parameter r679 provides diagnostic information about the SCBx.

It is possible to set a time monitoring function in H310 which results in a fault trip with F116 in the case of a timeout (do not use parameters P722 and P704 described in the operating instructions for the basic unit for this purpose). Fault message F116 can be acknowledged even if the fault status is permanent. This ensures that the drive can always continue operation in manual mode, even after a communications failure.

Configuration of CBx / SCBx on MASTERDRIVES FC / VC / SC from 1995

Even if a T100 board is installed, the CBx is configured by means of the following basic unit parameters:
- P696 ... P705 and P918 if CBx is installed
- P660 ... P662, P665, P666, P682 ... P689 if SCBx is installed

These configuring parameters are "pushed through" the T100 to the CBx /SCBx when the Master Drives unit is switched on and after their settings have been altered.

Diagnosis and monitoring of CBx / SCBx on MASTERDRIVES FC / VC / SC from 1995

Parameters r731 and r958 provide important diagnostic information about the CBx. Parameter r730 provides diagnostic information about the SCBx.

It is possible to set a time monitoring function in H310 which results in a fault trip with F116 in the case of a timeout (do not use parameters P687 and P695 described in the operating instructions for the basic unit for this purpose). Fault message F116 can be acknowledged even if the fault status is permanent. This ensures that the drive can always continue operation in manual mode, even after a communications failure.

3.7.1 Operation of CBx/SCBx in accordance with the PROFIBUS user profile (e.g. with block package DVA_S5)

If you are operating the T100 on an automation system (e.g. SIMATIC S5, SIMADYN D etc.) via PROFIBUS or the USS protocol and if you have installed our block packages (e.g. DVA_S5, see /4/) in the automation system, then please note the following: Our block packages support the "PROFIBUS User Profile Variable-Speed Drives" (see /7/) and therefore require defined characteristics for a number of process data elements.

We recommend the following settings on the T100 for use in conjunction with our block packages:

a) Position of main control word and main status word
Word 1 of the T100 receive data should always be used as the main control word (connector K062, see block diagram sheet [18.3]).
Word 1 of the T100 receive data should always be used as the main status word (applies to connector selected via H311.1)

b) Control bit 10 ("Control requested")
Control bit 10 should be "wired through" directly from the CBx /SCBx to the basic unit. For this purpose, for example, bit 10 of K062 [18.3] must be isolated by means of a connector/binector converter and supplied to the basic unit via H272.11.

With a "1" status of bit 10, the automation system declares all its setpoints and control commands to be valid and requests the converter to accept them.

Bit 10 is not directly supported on the T100, i.e. the setpoints and control commands from the automation system which are connected to the T100 are always accepted regardless of bit 10 (but can, of course, be disabled or enabled on the T100 as a function of bit 10 if required). However, since the basic unit does not accept any setpoints or control commands at its dual-port RAM as long as the "wired-through" bit 10 is "0", it can always be guaranteed that no hazardous situations will arise.

c) Status bits 3, 7 and 9
The following status bits should be "wired through" from status word 1 of the basic converter to transmit word 1 of the CBx / SCBx (see [13.7]):

- Bit 3 "Fault" (binector B035)
- Bit 7 "Alarm" (binector B039)
- Bit 9 "Unit requests process data control from automation system" (binector B041)

These binectors should be connected to bits 3, 7 and 9 of the connector which can be selected via H311.1 [18.5], thus ensuring that the communications display word in DVA_S5 is updated.

d) Adjustable length of process data area for PROFIBUS messages (PPOs)
The PROFIBUS profile only permits process data lengths of 2, 6 or 10 words (PPO types 1 to 5).

e) Adjustable length of process data area for USS messages
The length of the process data area for USS messages can be between 0 and 10 words. When the length is "0", points a) to c) of this section do not apply and bits 6, 7 and 8 of the communications display word in the SIMATIC are not updated in DVA_S5.

3.8 Exchange of signals with MASTERDRIVES MC / VC from 1997 / 98

The data exchange with the basic unit takes place via a high-speed DUAL PORT RAM located on the T100 (see sheet 1 of block diagram). A maximum of 10 values in the actual value area can be transferred at a time from the basic unit to the T100 and in the setpoint area from the T100 to the basic unit. The connection of these data - both in the basic unit and in the T100 - is shown on sheets 10 ... 14 of the block diagram.

Note: Pages 10 ... 14 of the block diagram show the process data exchange with the Master Drives VC and MC. Please consult the Operating Instructions of your Master Drives basic unit for details of the process data interface between the basic unit and technology board ("TB") which is currently available. The connection of process data exchanged with the T100 in the Master Drives infeed/regenerative feedback units is not shown in the diagram. These connections must be made on the same basis as the mechanisms described in this manual in accordance with the operating instructions of the input/regenerative feedback unit used.

Actual value area (signals from basic unit ⇒ T100)

It is possible to link any connectors of the basic unit to the words in the actual value area by means of P734.01...10.

Example:
- Basic unit is a MASTER DRIVE VC
- The actual frequency value KK151 must be linked to the T100 in word 2 of the actual value area
- ⇒ Set P734.02=151!
- The actual frequency value is available in K038

It is advisable to link status words 1 and 2 (K032 and K033) to words 1 and 4 of the actual value area by setting P734.01=32 and P734.04=33.

Before the basic unit actual values can be processed on the T100, they must be converted to the internal "connector format" (100% = 4000 Hex = 16384 Dec). For "PZD groups" 2 to 4, this conversion involves a multiplication by 4 and the connector which has the multiplier "∗4" at its input should be selected to process the actual values. This multiplication by 4 is not normally required on new series MASTERDRIES MC / VC converters (from 1997 / 98).

Status bits from basic unit (sheets 13 and 14 of block diagram)

There are 32 basic unit status bits available as binectors for further processing on the T100. All status bits can be viewed in d030.01 and d030.02. A luminous bar is assigned to each status bit on the 7-segment display of the PMU operator panel.

Setpoint area (signals T100 ⇒ basic unit)

The setpoints and control bits which the T100 sends to the basic unit are only effective in the unit if they are gated there via the injection or connection parameters specified on sheets 10 ... 12 of the block diagram. There is, however, one exception:

Important: If a T100 is installed, then control bit 10 "Control requested" is always connected to the basic unit (sheet 11 of block diagram). It is essential to set this control bit 10 to "1" on the T100 - e.g. via H272.11 = 1 if the basic unit must accept setpoints and control commands from the T100.

In other cases, a setpoint or a control bit in the basic unit should only be connected to the source "TB" (=T100) if the application requires this signal to be specified by the T100. Sheet 10 of the block diagram shows a possible connection of the relevant setpoints and control words if this is required.

It is advisable to reserve words 1 and 4 in the setpoint area as selectable sources for the basic converter control bits 0 to 31. Word 10 in the setpoint area is intended for the P-gain adaptation factor of the speed controller in the Master Drives VC. The characteristic block shown on sheet 10 of the block diagram generates this adaptation factor from the connector selected via H275.08.

Note: The P-gain adaptation function on the T100 is not normally used on new series MASTERDRIVES MC / VC, as the new basic unit already has this functionality.

Control bits to basic unit (sheets 11 and 12 of block diagram)

The 32 available control bits can be connected either word-serially via H270 and H271 or (if H270/H271=2) bit-for-bit via H272 to the DUAL PORT RAM. They can be connected from the RAM to the desired control function in basic unit control words 1 and 2 via P554 ... P590 in the basic converter if required. Control bit 10 "Control requested" is an exception, see box above.

Use of analog and digital inputs/outputs of the basic converter by the T100

The T100 is able to use the free analog and digital inputs/outputs of the Master Drives VC and MC provided that appropriate connector and binector connections have been made in the basic converter.

3.9 Exchange of signals with MASTERDRIVES FC / VC / SC from 1995

The data exchange with the basic unit takes place via a high-speed DUAL PORT RAM located on the T100 (see sheet 1 of block diagram). A maximum of 10 values in the actual value area can be transferred at a time from the basic unit to the T100 and in the setpoint area from the T100 to the basic unit. The connection of these data - both in the basic unit and in the T100 - is shown on sheets 10 ... 14 of the block diagram.

Note: Pages 10 ... 14 of the block diagram show the process data exchange with the Master Drives FC, VC and SC in the version available in July 1995. Please consult the Operating Instructions of your Master Drives basic unit for details of the process data interface between the basic unit and technology board ("TB") which is currently available. The connection of process data exchanged with the T100 in the Master Drives infeed/regenerative feedback units is not shown in the diagram. These connections must be made on the same basis as the mechanisms described in this manual in accordance with the operating instructions of the input/regenerative feedback unit used.

Actual value area (signals from basic unit ⇒ T100)

It is possible to link any signals (defined as non-indexed r or P parameters) of the basic unit to the words in the actual value area by means of P694.01...10.

Example:
- Basic unit is a MASTER DRIVE VC
- The actual frequency value r218 must be linked to the T100 in word 2 of the actual value area
- ⇒ Set P694.2=218!
- The actual frequency value is available in K038

It is advisable to link status words 1 and 2 (r968 and r553) to words 1 and 4 of the actual value area by setting P694.1=968 and P694.4=553.

Before the basic unit actual values can be processed on the T100, they must be converted to the internal "connector format" (100% = 4000 Hex = 16384 Dec). For "PZD groups" 2 to 4, this conversion involves a multiplication by 4 and the connector which has the multiplier "∗4" at its input should be selected to process the actual values.

Example:
- The basic units is a MASTER DRIVE VC with "Closed-loop speed control" method
- The converter output current r004 must be connected to the T100 in word 9 of the actual value area. r004 has numerical notation "100% equals 1000 Hex"
- ⇒ Set P964.9=004
- The output current is available in K052 in the normal connector representation "100% equals 4000 Hex"

Status bits from basic unit (sheets 13 and 14 of block diagram)

There are 32 basic unit status bits available as binectors for further processing on the T100. All status bits can be viewed in d030.01 and d030.02. A luminous bar is assigned to each status bit on the 7-segment display of the PMU operator panel.

Setpoint area (signals T100 ⇒ basic unit)

The setpoints and control bits which the T100 sends to the basic unit are only effective in the unit if they are gated there via the injection or connection parameters specified on sheets 10 ... 12 of the block diagram. There is, however, one exception:

Important: If a T100 is logged on with the basic unit (P090=2), then control bit 10 "Control requested" is always connected to the basic unit (sheet 11 of block diagram). It is essential to set this control bit 10 to "1" on the T100 - e.g. via H272.11 = 1 if the basic unit must accept setpoints and control commands from the T100.

In other cases, a setpoint or a control bit in the basic unit should only be connected to the source "TB" (=T100) if the application requires this signal to be specified by the T100. Sheet 10 of the block diagram shows a possible connection of the relevant setpoints and control words if this is required.

It is advisable to reserve words 1 and 4 in the setpoint area as selectable sources for the basic converter control bits 0 to 31. Word 10 in the setpoint area is intended for the P-gain adaptation factor of the speed controller in the Master Drives VC. The characteristic block shown on sheet 10 of the block diagram generates this adaptation factor from the connector selected via H275.08.

Control bits to basic unit (sheets 11 and 12 of block diagram)

The 32 available control bits can be connected either word-serially via H270 and H271 or (if H270/H271=2) bit-for-bit via H272 to the DUAL PORT RAM. They can be connected from the RAM to the desired control function in basic unit control words 1 and 2 via P554 ... P590 in the basic converter if required. Control bit 10 "Control requested" is an exception, see box above.

Use of analog inputs/outputs of the basic converter by the T100

The T100 is able to use the free analog inputs/outputs of the Master Drives VC and SC provided that the technology controller of the basic converter is wired up accordingly and the basic converter is wired as follows:

- An analog value to be output is initially sent from the DPRAM (dual-port RAM) via P526 or P531 = 30xx to the setpoint or actual-value input of the technology controller in the basic converter. The assigned display parameter r529 or r534 can then be wired through to the analog output.

- An analog value to be input is initially sent from the analog input of the basic converter via P526 or P531 = 1003 / 1004 to the setpoint or actual-value input of the technology controller. The assigned display parameter r529 or r534 can then be wired through to the DPRAM of the T100 via P694.x = 529 / 534.

3.10 Selecting factory setting for T100 parameters via H970=0

The purpose of this function is to reset all (H) parameters on the T100 technology board to the factory setting (delivery state) as specified in the parameter list (Chapter 2).

The "Factory setting" selection can be made in all operating modes except for Run (^{o}014, ^{o}015, ^{o}018).

Operational sequence:

⇓	H970 = 0	Select "Factory setting" function
⇓	P key	H970 appears All H parameters are reset to the factory setting specified in the parameter list
⇓	P key	To indicate execution of the function, the numbers 1xxx of the Hxxx parameters being processed are output sequentially as the "parameter value" on the parameter display
⇓	After the parameters have been set to the factory setting, H970 is automatically set to 1	

3.11 Dynamic reading or writing of basic unit parameters

See also sheet 15 of block diagram

With this function, it is possible to read P and r parameters of the basic unit and alter the P parameter settings from the T100 board. The changes in the basic unit are stored only in the RAM and are not stored when the

supply voltage is disconnected. In order to read a basic unit parameter, H284 must be set to 2. The contents of the selected parameter are then available at connector K054.

Example: The setting of parameter P444 index.02 in the basic unit must be altered according to the voltage at analog input terminal 50/51.
Apart from the analog input settings, the following settings must be made:

1. H284 = 3: Switches connector K003 (analog input terminal 50/51) to the input of the transfer block
2. H282 = 444: Selects the number of the basic unit parameter
3. H283 = 2: Selects the index of the basic unit parameter which is to be written (H283=0 must be set for "non-indexed" parameters)

3.12 Technology controller

See also sheet 21 of block diagram and parameter list (Chapter 4, parameters H330-H359)

Controller type

The controller type can be selected via parameter H351:
- P controller (I component = 0)
- I controller (P component = 0)
- PI controller / PID controller

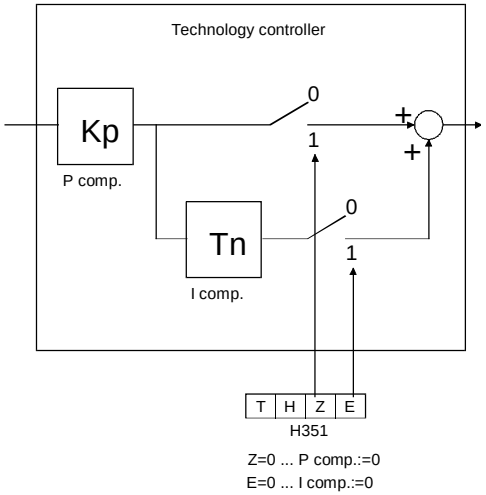

Reset time setting range

H345 = 0: Range of effective reset time Tn: 0.000 to 60.000 sec
H345 = 1: Range of effective reset time Tn: 60 to 60000 sec (1 minute to approx. 16.7 hours !)
The setting H345 = 1 may only be used when reset times of > 60 sec actually need to be set. (The settings H345 = 1 and H344 = 0.001 sec would in theory also produce an effective reset time Tn of 1 sec. However, the internal calculations for these settings are extremely inaccurate.)

Control signals for technology controller

Enable technology controller:
0 = Disable controller, controller output = 0, K082 (P component) = 0, K083 (I component) = 0
1 = Enable controller

Set I component:
I component is set to the setting value on 0 → 1 signal transition at selected binector

Limitation

A special characteristic of the limitation function is that the lower limitation can also be set to positive values and the upper limitation to negative values (see H354 and H356). A limit set in this way also acts as a lower limit (minimum value) for the output signal of the technology controller in the opposite sign direction.

Warning!	If the positive output limitation of the technology controller is set to a negative value or the negative output limitation set to a positive value, then the motor may accelerate in an uncontrolled manner in some operating modes and configurations, e.g. if there is no motor counter-torque and the technology controller output is connected to the torque supplementary setpoint of the basic unit.

D component in actual-value channel or setpoint/actual value deviation channel

The derivative-action time of the D component has the following setting ranges:

H333 = 0: Range of effective derivative-action time Tv: 0.000 to 30.000 sec
H333 = 1: Range of effective derivative-action time Tv: 30 to 30000 sec (= approx. 8.3 hours !)
The setting H333 = 1 may only be used when derivative-action times of > 30 sec actually need to be set. (The settings H333 = 1 and H332 = 0.001 sec would in theory also produce an effective derivative-action time Tv of 1 sec. However, the internal calculations for these settings are extremely inaccurate.)

As a basis for selecting the derivative-action time, the maximum possible rate of rise which can occur at the input of the D-action element must be calculated. The derivative-action time should then be set shorter than the period of time required by the input signal to change from 0 to 100% at the calculated maximum rate of rise.

3.13 Comfort ramp-function generator

See also sheet 22 of block diagram and parameter list (Chapter 4, parameters H360-H394)

Note:	The ramp-function generator will only operate if the following conditions are fulfilled: - Enable ramp-function generator = 1(e.g. by setting H368 = 1) - Disable ramp-function generator = 0 (e.g. by setting H362 = 0)

Definitions

Ramp-up = Acceleration from low positive to high positive speeds (e.g. 10% to 90%) or from low negative to high negative speeds (e.g. -10% to -90%)

Ramp-down = Braking from high positive to low positive speeds (e.g. 90% to 10%) or from high negative to low negative speeds (e.g. -90% to -10%)

On transition from negative to positive speeds e.g. -10% to +50%:
from -10% to 0 = ramp-down and
from 0 to +50% = ramp-up and vice versa

Ramp-up time is the time required by the ramp-function generator to pass through the 100% at the ramp-generator output with a lower and upper transition rounding setting of 0 and a step change in the input quantity from 0 to 100%, or from 0 to -100%. With less abrupt changes at the input, the rate of rise at the output is constant.

Ramp-down time is the time required by the ramp-generator to pass through 100% at the ramp-generator output with a lower and upper transition rounding setting of 0 and a step change in the input quantity of 100% to 0 or of -100% to 0. With less abrupt changes at the input, the rate of rise at the output is constant.

Mode of operation of ramp-function generator

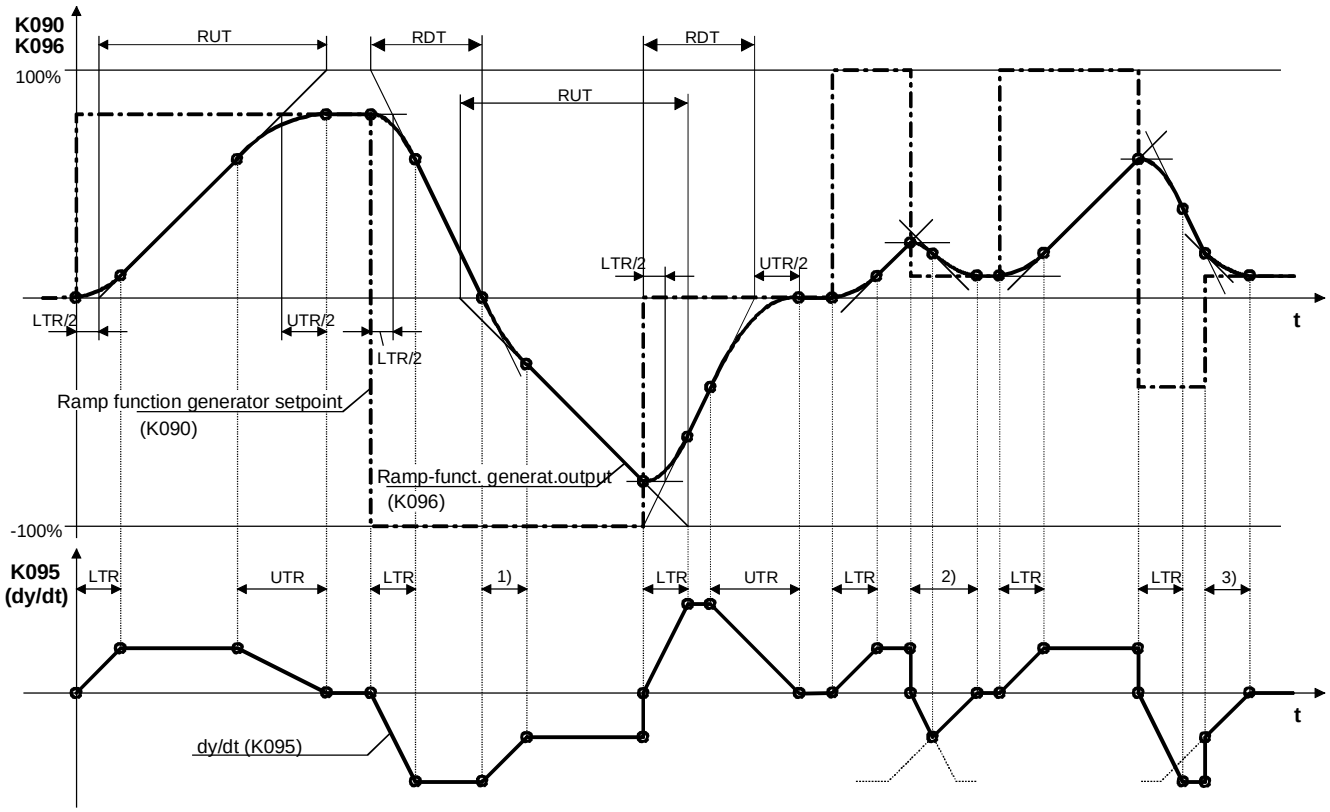

RUT ... Ramp-up time (H372, H377, H381), RDT ... Ramp-down time (H373, H378, H382)
LTR ... Lower transition rounding (H374, H379, H383), UTR ... Upper transition rounding (H375, H380, H384)

1) Transition from slope of run-down ramp to slope of run-up ramp
2) The lower transition rounding changes to the upper transition rounding before the maximum run-down slope is reached
3) Owing to the step change at the generator input, only the last part of the upper transition rounding is executed here

Control signals for comfort ramp-function generator

Stop ramp-function generator:
1 = Ramp-function generator is stopped at the currently applied value (generator output is injected as the generator input).

Disable ramp-function generator:
1 = Ramp-function generator setting 1 becomes valid and "0" is applied to the input (ramp-function generator output decreases to 0)

Set ramp-function generator:
1 = Ramp-function generator output is set to setting value

Enable ramp-function generator:
0 = Ramp-function generator disabled, generator output is set to 0
1 = Ramp-function generator enabled

Starting integrator operation ON: See parameter list H366
Note: If the "Starting integrator operation ON" signal is switched to 1 when the ramp generator is enabled, then ramp generator setting 3 becomes valid immediately

Ramp-function generator settings 2 and 3: See parameter list H370 and H371
RFG setting 1 is valid if neither setting 2 nor setting 3 is selected. If RFG settings 2 and 3 are selected simultaneously, alarm A104 (RFG setting ambiguous) is activated. During this period, the last unambiguous setting is effective.

Limitation in ramp-function generator, ramp-function generator tracking

H369 = 0: The limitation in the ramp-function generator is ineffective. The limitation of the output signal (K100), but not of the internal integrator in the ramp generator (K096), is effected by means of the downstream limiter stage (H390...H394).
H369 = 1: The limitation in the ramp-function generator is effective. When the limitations defined via H385...H387 (L+, L-) are reached, the ramp-function generator (K096) follows the limitation via the effective ramp-generator setting.

Limitation at ramp-function generator output

This limiter stage can be used completely independently of the ramp-function generator because the input signal can be freely selected. A special feature of this limitation function is that the lower limitation can also be set to positive values and the upper limitation to negative values (see H391 and H393). A limit set in this way is then applied as the lower limit (minimum value) for the output signal of the ramp-function generator in the opposite sign direction. Please observe the warning given in Chapter 3.11!

Example: H392.01-04 = 2 (= 200%)
H391 = 100.00 (%)
H393 = 10.00 (%)
H394.01-04 = 2 (= -200%)
results in a limitation of the value range of K100 to +10.00% to +100.00%

Velocity signal dy/dt (K095)

This signal specifies the variation in the ramp-function generator output K096 during the period set in H367.

Restriction in SW version 1.0:
In SW version 1.0, the signal dy/dt is generated correctly only if the comfort ramp-function generator is active. If the change at the RFG output is generated, for example, by a ramp at the RFG input with a lower rate of rise than the run-up/run-down ramp, then the dy/dt signal is "0" because the RFG ramp time has always expired in this case. The same also applies when a ramp-up/ramp-down time of "0" is set.

3.14 Motorized potentiometer

See also sheet 23 of the block diagram and parameter list (Chapter 4, parameters H400 to H411)

Modes of operation

It is possible to switch over between operating modes either by a parameter setting (H400) or by means of a control binector (selected via H408).

Automatic mode / Ramp-function generator mode:
The ramp-function generator follows the automatic-mode setpoint. The Raise/Lower commands are ignored.

Manual mode / Motorized potentiometer mode:
The ramp-function generator is operated according to Raise/Lower commands. The automatic-mode setpoint is ignored.

The following settings can be made in manual mode / motorized potentiometer mode:

Operating range 0% to ±100%, Clockwise / Counter-clockwise:
When "Raise setpoint" is selected, a setpoint of +100% is applied to the ramp-generator input (for Clockwise selection) or a setpoint of -100% (for Counter-clockwise selection). When "Lower setpoint" is selected, setpoint 0 is applied to the generator input.

Operating range -100% to +100%
When "Raise setpoint" is selected, +100% is applied as a setpoint to the ramp-generator input and -100% for "Lower setpoint". The Clockwise/Counter-clockwise switchover is not operative in this mode.

The operating range is selected by means of parameter setting (H400). Clockwise / counter-clockwise switchover and Raise/Lower inputs are selected by means of control binectors.

Ramp-function generator

Ramp-up time:
is the time required by the ramp-function generator to pass through the 100% at the ramp-generator output with a step change in the input quantity from 0 to 100%, or from 0 to -100%. With less abrupt changes at the input, the rate of rise at the output is constant.

Ramp-down time:
is the time required by the ramp-generator to pass through 100% at the ramp-generator output with a step change in the input quantity of 100% to 0 or of -100% to 0. With less abrupt changes at the input, the rate of rise at the output is constant.

Set motorized potentiometer:
The ramp-function generator is set to the setting value when binector = 1.

Other settings via parameter H400:
- Selection of non-volatile storage of ramp-generator status on disconnection of power supply
- Bypass of ramp-generator in automatic mode (as for ramp-up/ramp-down time = 0)

Velocity signal dy/dt (K160)

This signal specifies the variation in the ramp-function generator output K158 during the period set in H412 and H404.

Restriction in SW version 1.0:
In SW version 1.0, the signal dy/dt is generated correctly only if the ramp-function generator is active. If the change at the RFG output is generated, for example, by a ramp at the RFG input with a lower rate of rise than the run-up/run-down ramp, then the dy/dt signal is "0" because the RFG ramp time has always expired in this case. The same also applies when a ramp-up/ramp-down time of "0" is set.

3.15 Wobble generator

See also sheet 24 of block diagram and parameter list (Chapter 4, parameters H408 to H426)

Note: Prerequisites for operation of the wobble generator:

In order to run up the wobble generator from the factory setting, you must:
- Set the wobble amplitude to H421 > 0
- Issue the wobble enable command (e.g. with H420 = 1)
- Input an "unmodulated setpoint" with a value other than zero, e.g. with H418 = 1

Synchronizing signal:
If H423 ≠ 360 is set, then the wobble generator operates in synchronism with a "master wobble generator", e.g. installed on another T100:

- Every positive edge of the wobble synchronizing input signal results in termination of the current period of the wobble triangle generator on completion of the phase shift parameterized in H423 and to the start of a new period ("retriggering").
- If the frequency of the wobble synchronizing signal does not tally with the parameterized frequency (H422), then "re-triggering" takes place if the wobble synchronizing signal frequency is higher - as described above.

When the wobble synchronizing signal frequency is lower, there is a pause at the end of every period of the triangle generator during which the wobble generator output remains at zero.

Parameterization

- The values of parameters H420, H421, H422, H424, H425 and H426 are transferred only after one full period of the wobble triangle generator and on commencement of a new period. They then remain valid for the whole of the next period even if the value of one parameter changes in the meantime.

4 Parameter Handling and Parameter List

The T100 has its own EEPROM parameter memory. The technology parameters must therefore be input again (see Chapter 7) when a new board is installed.

Note: The technology parameters are set to the factory values via H970 (not in P052, P970 or H052)!

4.1 Parameterization inputs on PMU and OP1 parameterizing units

T100 parameters are identified by the initial letters "d" and "H". "d" parameters are display parameters. They can be read but not altered. "H" parameters are the setting parameters. The "d" parameters are positioned before the "H" parameters and after the "r" and "P" parameters of the basic unit. The order in which parameters are called on the parameterizing units is thus as follows:

- "r" and "P" parameters of basic unit
- "d" parameters (display parameters of T100, appear after P999)
- "H" parameters of T100

Important note

When parameter numbers are scrolled through on the display of the parameterizing unit, no distinction is made initially beween "d" and "H" parameters. The appropriate letter "d" or "H" is output next to the parameter value only after the Raise or Lower key has been released.
The reason for this is that the Raise/Lower key of the parameterizing unit is processed in the basic unit without any continuous communication taking place with the T100 so that the basic unit does not know initially whether the parameter is of the "d" or "H" type.

Important regarding OP1 unit

Technology parameters can be entered directly on the OP1 if they are preceded by "1" (e.g. type in "1025" in order to address d025).

4.2 Access to technology parameters via a serial interface

Number notation of parameter numbers and values on the serial interfaces

The numbers of the technology parameters (H and d parameters) are preceded by a "1" to distinguish them from the numbers of the basic unit parameters (r and P parameters) i.e. they differ by an offset of 1000d (example: "d041 is addressed on the serial interface with the number 1041d and "H343" with the number 1343d).

The number notation of a parameter value depends on the parameter "type" specified in each case in the parameter list. The various parameter types are explained at the beginning of the list. The parameters are always transferred in the form in which they are specified in the "value range" column of the parameter list, but with the decimal point (if any) omitted. (Example: Display value 123.45 --> the number 12345d = 3039h is transmitted via the interface).

The parameter numbers are thus represented as follows:

Parameter number on PMU and OP1	Parameter number on the serial interface
P000 - P999	000 - 999 dec = 0000 - 03E7 hex
r000 - r999	000 - 999 dec = 0000 - 03E7 hex
d000 - d999	1000 - 1999 dec = 03E8 - 07CF hex
H000 - H999	1000 - 1999 dec = 03E8 - 07CF hex

Parameter values are transferred as follows on the serial interface (negative values in two's complement):

Parameter type	Value range in parameter list and on PMU / OP1	Value range on serial interface
I2	-32768 ... 32767 -3276.8 ... 3276.7 -327.68 ... 327.67 -32.768 ... 32.767	-32768 ... 32767 dec = 8000 ... 7FFF hex
O2	0 ... 65535 0 ... 6553.5 0 ... 655.35 0 ... 65.535	0 ... 65535 dec = 0000 ... FFFF hex
V2	 on PMU 0000 0000 00000000 ... 11111111 1111 1111 on OP1 + SIMOVIS	0000 ... FFFF hex = 0 ... 65535 dec
L2	0000 ... FFFF	0000 ... FFFF hex = 0 ... 65535 dec

Note: Technology parameters changed in the RAM are transferred to the EEPROM by means of H971 and not via P971 (applies only to parameter changes via a serial interface with parameter job "Change in RAM").

Note: H and P parameters can be changed via the serial interfaces only if the particular interface has been enabled for parameterization via P053, e.g.:

- P053=n+16 ⇒ Parameter settings can be changed via the USS interface of the T100
- P053=n+8 ⇒ Parameter settings can be changed via the SCBx communications board (e.g. SCB2)
- P053=n+1 ⇒ Parameter settings can be changed via the CBx communications board (e.g. CB1)

Parameters can be read via any of the serial interface regardless of how P053 is set.

Note: The factory setting of the H parameters is restored via parameter H970 (see Chapter 3.9).

4.3 Parameter list

Overview of parameter list

Parameter number range	Function
d000 - d002	Board identification
d010 - d049	Display parameters
H050	Language selection
H051	Code parameter
d052 - d099	Display parameters
H100 - H146	Analog inputs (F10 to F50)
H150 - H165	Analog outputs (F1690, F1700)
H170 - H185	Binary inputs (F60 to F130)
H190 - H204	Binary outputs (F1710 to F1750)
H210 - H224	Fixed setpoints (B160, F210 to F340)
H230 - H235	Fixed control bits (F350 to F400)
H240 - H245	Connector displays (B60 to B105)
H250 - H253	Binector displays (B110 to B140)
H260 - H263	Fault-message trigger signals (F1590 to F1620)
H264 - H267	Alarm-message trigger signals (B10 to B40)
H270 - H284	Process data exchange with basic unit (F170, F1660, F180, F1670, B150)
H290 - H297	Data exchange via USS interface (F160, F1770)
H300 - H305	Data exchange via peer-to-peer connection (F150, F1760)
H310 - H312	Process data exchange with COM BOARD (CBx or SCBx) (F190, F1680)
H320	Connector/binector converters (F410 to F430)
H324 - H326	Binector/connector converters (F1630 to F1650)
H330 - H359	Technology controller (F1240)
H360 - H394	Comfort ramp-function generator (F1010)
H400 - H414	Motorized potentiometer (F670)
H418 - H426	Wobble generator (F1020)
H430 - H444	Adders (F590, F680, F950, F1030, F1370)
H445 - H450	Subtracters (F720, F1070, F1310)
H451 - H455	Sign inverters (F580, F840, F1550, F920)
H456 - H461	Dividers (F730, F960, F1380)
H462 - H469	Multipliers (F650, F750, F1080, F1460)
H470 - H480	High-resolution multipliers/dividers (F740, F910, F1150)
H482 - H493	Absolute-value generators with filter (F440, F1320, F1530, F1580)
H494 - H501	Limiters (F1190, F1470)
H502 - H513	Limit-value monitors with filter (F830, F1540)
H514 - H519	Maximum/minimum selection (F1390, F1400)
H520 - H529	Tracking/storage elements (F450, F460)
H530 - H533	Analog signal memories (F470, F480)
H534 - H563	Analog signal switches (F490, F550, F640, F780, F810, F860, F1060, F1130, F1160, F1220)
H570 - H575	Simple ramp-function generator (F900)
H576 - H577	Dead zone (F570)
H580 - H588	Characteristic blocks (F760, F930, F1330)
H590 - H630	Logic functions
H631 - H644	RS flipflops (F880, F940, F1120, F1270, F1300, F1430, F1440)
H645 - H652	D flipflops (F820, F1280)
H660 - H674	Timers (F530, F1110, F1170, F1200, F1290)
H675 - H686	Binary signal switches (F560, F630, F1000, F1140)
H690 - H694	Velocity/speed calculators (B50, F1230)
H700 - H703	Parameter set switchover (F200)
H750 - H752	Task sequence selection
H917 - d998	System parameters

Overview of abbreviations used in parameter list

Example:

PNU *: Ack. par.	OP1 parameter name Description	Value range [unit] Selection text	No. indices Factory setting	Read Write (Access / State)
H190 * **1)**	**BA87SourceBinect** **8)** Selection of binector to be applied to the terminal 0 = Fixed value 0 1 = Fixed value 1 2 = Fixed value 0 3 = Binector B003 4 = Binector B004 etc. PNU=4A6 Hex; Type=O2; **2)** Normalization: 1==1; **3)** Block diag.: [7.1] **4)**	0 to 200	Ind: None FS=0	**5)** **6)** 1/UHABR 1/UHAB **7)**

1) An * under the parameter number indicates that this is an acknowledgement parameter, i.e. the changed value is not activated until the P key (shift key) has been pressed. If the P key (on PMU) is not pressed within about 10 s of the last value change, then the change to the value is discarded and the previous value displayed again.

2) Specification of parameter type

O2 Unsigned 16-bit value (range 0 to 65535)

I2 Signed 16-bit value (range -32768 to +32767), negative numbers in two's complement

V2 Bit-coded quantity (2-bytes bit array)
Every one of the 16 bits is significant in its own right. The individual bits of a parameter of type V2 are represented on the 7-segment display in the following way (the decimal point in the centre of the display always lights up to indicate an active function):

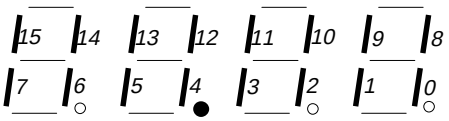

L2 Nibble-coded quantity (2 bytes consisting of 4 mutually independent nibbles)
The nibble values A Hex to F Hex are displayed as hexadecimal numbers.
The limitation of an L2-type parameter is also "nibble-oriented", i.e. each nibble is limited to the values specified in the column headed "Value range".
Example: Parameter H400 has a value range of 0001 to 1112
i.e.. Nibble 0 (units position): Lower limitation = 1, upper limitation = 2
Nibble 1 (tens position): Lower limitation = 0, upper limitation = 1 etc.

3) Specification of normalization for transmission of parameter value via a serial interface

4) Specification of block diagram [sheet.column] in which parameter can be found

5) Access level (H051) from which a parameter can be altered or displayed

0	d and H parameters can be read, but not changed
1	Standard mode
2	Expert mode
3	Logbook mode

6) Specification of operational states in which the parameter can be displayed (see chapter "Parameter List" in the operating instructions of the basic unit)

7) Specification of operational states in which the parameter setting can be changed

6) 7) Operational states

U	MLFB (machine-readable product designation) input	o000
H	Hardware configuration	o002, o004
A	Drive setting	o005
B	Ready (incl.: Fault)	o007, o008, o009, o010, o011, o012, o021
R	Run	o014, o015, o018

8) Abbreviated parameter designation on OP1 and in the SIMOVIS service program. This can be read out of the Master Drive units via the serial interface (see e.g. /3/).

PNU *: Ack. par.	OP1 parameter name Description	Value range [unit] Selection text	No. of indices Factory setting	Read Write (Access / State)

Board identification

d000	**HWBoardCodeSlot2** PNU=3E8 Hex; Type=O2; Normalization: 131==TECH BOARD T100	131	Ind: None	1/UHABR
d001	**TechSoftwareType** (software module type) 0.xx = "Multi-Purpose Drive" software module PNU=3E9 Hex; Type=O2; Normalization: 1==0.01	0.00 to 99.99	Ind: None	1/UHABR
d002	**TechSoftwareVers** (software version) PNU=3EA Hex; Type=O2; Normalization: 1==0.1	0.0 to 25.5	Ind: None	1/UHABR

Display parameters

d010	**AE50_InputSignal** **(for F10)** **Analog input terminal 50:** Display of normalized and filtered input voltage PNU=3F2 Hex; Type=I2; Normalization: 1==0,1 %; Block diag.: [2.8]	-200.0 to 199.9 [%]	Ind: None	1/UHABR
d011	**AE52_InputSignal** **(for F20)** **Analog input terminal 52:** As for d010 PNU=3F3 Hex; Type=I2; Normalization: 1==0,1 %; Block diag.: [2.8]	-200.0 to 199.9 [%]	Ind: None	1/UHABR
d012	**AE54_InputSignal** **(for F30)** **Analog input terminal 54:** As for d010 PNU=3F4 Hex; Type=I2; Normalization: 1==0,1 %; Block diag.: [3.8]	-200.0 to 199.9 [%]	Ind: None	1/UHABR
d013	**AE56_InputSignal** **(for F40)** **Analog input terminal 56:** As for d010 PNU=3F5 Hex; Type=I2; Normalization: 1==0,1 %; Block diag.: [3.8]	-200.0 to 199.9 [%]	Ind: None	1/UHABR
d014	**AE58_InputSignal** **(for F50)** **Analog input terminal 58:** As for d010 PNU=3F6 Hex; Type=I2; Normalization: 1==0,1 %; Block diag.: [3.8]	-200.0 to 199.9 [%]	Ind: None	1/UHABR
d015	**AA61_Outp.Signal** **(for F1690)** **Analog output terminal 61:** Display of value selected for the analog output. The signal injection mode and the filter time are also taken into account. PNU=3F7 Hex; Type=I2; Normalization: 1==0,1 %; Block diag.: [4.3]	-200.0 to 199.9 [%]	Ind: None	1/UHABR
d016	**AA63_Outp.Signal** **(for F1700)** **Analog output terminal 63:** As for d015 PNU=3F8 Hex; Type=I2; Normalization: 1==0,1 %; Block diag.: [4.3]	-200.0 to 199.9 [%]	Ind: None	1/UHABR
d017	**Bin.Input 77-84** **(for F60 to F130)** **Binary inputs terminals 77 to 84:** indicates the states of the terminals by means of illuminated bars on the 7-segment display 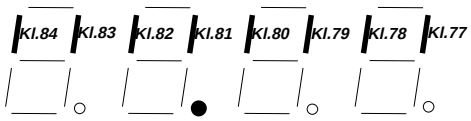 PNU=3F9 Hex; Type=V2; Normalization: 1==1 Hex; Block diag.: [5.5]		Ind: None	1/UHABR
d018	**Bin.Output 87-91** **(for F1710 to F1750)** **Binary outputs terminals 87 to 91:** indicates the states of the terminals by means of illuminated bars on the 7-segment display 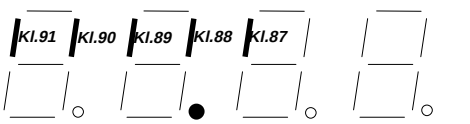 PNU=3FA Hex; Type=V2; Normalization: 1==1 Hex; Block diag.: [7.4]		Ind: None	1/UHABR

PNU *: Ack. par.	OP1 parameter name Description	Value range [unit] Selection text	No. of indices Factory setting	Read Write (Access / State)
d019	**Bin.OutputOverId** **(for F1720 to F1760)** **Binary outputs terminals 87 to 91:** indicates on the illuminated bars of the 7-segment display whether the short-circuit monitor or the internal P24 supply monitor has responded for a binary output 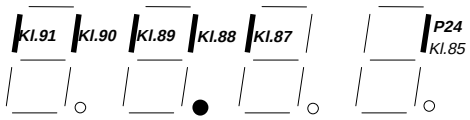 PNU=3FB Hex; Type=V2; Normalization: 1==1 Hex; Block diag.: [7.4]		Ind: None	1/UHABR
d020	**ConnDisp (H240)** **(for B60)** **Connector display 1:** Display of connector selected in H240 PNU=3FC Hex; Type=I2; Normalization: 1==0,1 %; Block diag.: [8.5]	-200.0 to 199.9 [%]	Ind: None	1/UHABR
d021	**ConnDisp (H241)** **(for B70)** **Connector display 2:** Display of connector selected in H241 PNU=3FD Hex; Type=I2; Normalization: 1==0,1 %; Block diag.: [8.5]	-200.0 to 199.9 [%]	Ind: None	1/UHABR
d022	**ConnDisp (H242)** **(for B80)** **Connector display 3:** Display of connector selected in H242 PNU=3FE Hex; Type=I2; Normalization: 1==0,1 %; Block diag.: [8.5]	-200.0 to 199.9 [%]	Ind: None	1/UHABR
d023	**ConnDisp (H243)** **(for B90)** **Connector display 4:** Display of connector selected in H243 PNU=3FF Hex; Type=I2; Normalization: 1==0.1 %; Block diag.: [8.5]	-200.0 to 199.9 [%]	Ind: None	1/UHABR
d024	**ConnDisp (H244)** **(for B100)** **Connector display 5:** Display of connector selected in H244 PNU=400 Hex; Type=I2; Normalization: 1==0.1 %; Block diag.: [8.5]	-200.0 to 199.9 [%]	Ind: None	1/UHABR
d025	**ConnDisp (H245)** **(for B105)** **High-resolution connector display:** Display of connector selected in H245 PNU=401 Hex; Type=I2; Normalization: 1==0.01 %; Block diag.: [8.6]	-200.00 to 199.99 [%]	Ind: None	1/UHABR
d026	**BinecDisp (H250)** **(for B110)** **Binector display 1:** Display of binector selected in H250 PNU=402 Hex; Type=I2; Normalization: 1==1; Block diag.: [8.6]	0 to 1	Ind: None	1/UHABR
d027	**BinecDisp (H251)** **(for B120)** **Binector display 2:** Display of binector selected in H251 PNU=403 Hex; Type=I2; Normalization: 1==1; Block diag.: [8.6]	0 to 1	Ind: None	1/UHABR
d028	**BinecDisp (H252)** **(for B130)** **Binector display 3:** Display of binector selected in H252 PNU=404 Hex; Type=I2; Normalization: 1==1; Block diag.: [8.6]	0 to 1	Ind: None	1/UHABR
d029	**BinecDisp (H253)** **(for B140)** **Binector display 4:** Display of binector selected in H253 PNU=405 Hex; Type=I2; Normalization: 1==1; Block diag.: [8.6]	0 to 1	Ind: None	1/UHABR

PNU *: Ack. par.	OP1 parameter name Description	Value range [unit] Selection text	No. of indices Factory setting	Read Write (Access / State)
d030	**StatusBits BUnit** **(for F170. F1660)** **Data exchange with basic unit:** Display of control and status words i01: Display of status word 1 i02: Display of status word 2 i03: Display of control word 1 i04: Display of control word 2 indicates states of bits in status or control word by means of illuminated bars on the 7-segment display Display of status/control word 1 (bits 0 to 15): 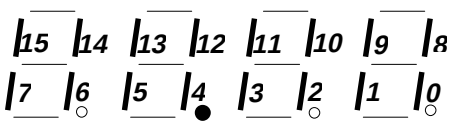 Display of status/control word 2 (bits 16 to 31): 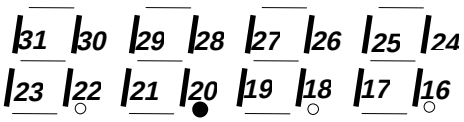 Note: The status bits can be observed only if the appropriate connections in the basic unit have been made (via P694.01=968 and P694.04=553). The functions assigned to the control bits are effective in the basic unit only if the appropriate connections in the unit have been made (via P554 ... 590) PNU=406 Hex; Type=V2; Normalization: 1==1 Hex; Block diag.: [11...14]		Ind: 4	1/UHABR
d031	**ActValuesFromBU** **(= F180)** **Data exchange with basic unit:** Display of actual values from basic unit i01: Display actual value 1 i02: Display actual value 2 **...** i08: Display actual value 8 i09: Display (actual value 1) * 4 i10 Display (actual value 2) * 4 **...** i16 Display (actual value 8) * 4 PNU=407 Hex; Type=I2; Normalization: 1==0.1 %; Block diag.: [10.2.3]	-200.0 to 199.9 [%]	Ind: 16	1/UHABR
d032	**Setpoints To BU** **(for F1670)** **Data exchange with basic unit:** Display of setpoints 1 - 7 to basic unit i01: Display setpoint 1 i02: Display setpoint 2 **...** i07: Display setpoint 7 PNU=408 Hex; Type=I2; Normalization: 1==0.1 %; Block diag.: [10.5]	-200.0 to 199.9 [%]	Ind: 7	1/UHABR
d033	**Setpoint8 To BU** **(for F1670)** **Data exchange with basic unit:** Display setpoint 8 to basic unit PNU=409 Hex; Type=O2; Normalization: 1==0.01; Block diag.: [10.5]	0.00 to 19.99	Ind: None	1/UHABR

PNU *: Ack. par.	OP1 parameter name Description	Value range [unit] Selection text	No. of indices Factory setting	Read Write (Access / State)
d035	**USS ReceiveData** **(= F160)** **Data exchange via USS interface:** Display of data received via the USS interface i01: Display process data word 1 **...** i10: Display process data word 10 i11 Reserved **...** i16 Reserved i17: Display parameter data word 1 **...** i20: Display parameter data word 4 PNU=40B Hex; Type=L2; Normalization: 1==1 Hex; Block diag.: [16.3.4]	0000 to FFFF H	Ind: 20	1/UHABR
d036	**USS TransmitData** **(for F1770)** **Data exchange via USS interface:** Display data transmitted via USS interface i01: Display process data word 1 **...** i10: Display process data word 10 i11 Reserved **...** i16 Reserved i17: Display parameter data word 1 **...** i20: Display parameter data word 4 PNU=40C Hex; Type=L2; Normalization: 1==1 Hex; Block diag.: [16.5.6]	0000 to FFFF H	Ind: 20	1/UHABR
d037	**USS Diagnos.Info** **(for F1770)** Diagnostic information for USS (decoupled counter, overflow at 255) i001: flTC Number of error-free messages i002: Terr Number of errored messages *) i003: Ferr Number of byte-frame errors *) i004: Orun Number of overrun errors i005: Prty Parity error *) i006: STX STX error *) i007: i008: BCC Block check error i009: TLen Incorrect message length i010: Taus Timeout *) If a T100 is operated on the same USS bus as the serial interface SST1 or SST2 of a converter, these counters may be incremented if the baud rate is 38.4 kBd. This is due to the poor tolerances of the baud rate. Data exchange is not affected, however. This behaviour can therefore be ignored. PNU=40D Hex; Type=O2; Normalization: 1==1; Block diag.: [16.1]		Ind: 10	1/UHABR
d040	**Peer ReceiveData** **(= F150)** **Data exchange via the peer-to-peer connection:** Display of data received via the peer-to-peer connection i01: Display word 1 i02: Display word 2 **...** i05: Display word 5 PNU=410 Hex; Type=L2; Normalization: 1==1 Hex; Block diag.: [17.3]	0000 to FFFF H	Ind: 5	1/UHABR

PNU *: Ack. par.	OP1 parameter name Description	Value range [unit] Selection text	No. of indices Factory setting	Read Write (Access / State)
d041	**PeerTransmitData** **(for F1760)** **Data exchange via the peer-to-peer connection:** Display of data transmitted via the peer-to-peer connection i01: Display word 1 i02: Display word 2 **...** i05: Display word 5 PNU=411 Hex; Type=L2; Normalization: 1==1 Hex; Block diag.: [17.5]	0000 to FFFF H	Ind: 5	1/UHABR
d042	**Peer Diagnosis** **(for F1760)** Diagnostic information for peer-to-peer connection (decoupled counter, overflow at 255) i001: flTC Number of error-free messages i002: Terr Number of errored messages i003: Ferr Number of byte-frame errors i004: Orun Number of overrun errors i005: Prty Parity error i006: STX STX error i007: i008: BCC Block check error i009: Lerr Incorrect message length i010: Taus Timeout PNU=412 Hex; Type=O2; Normalization: 1==1; Block diag.: [17.1]		Ind: 10	1/UHABR
d045	**CB/SCB RecvData** **(= F190)** **Process data exchange with the COM BOARD (CBx or SCBx):** Display of data received via the COM BOARD i01: Display word 1 i02: Display word 2 **...** i10: Display word 10 PNU=415 Hex; Type=L2; Normalization: 1==1 Hex; Block diag.: [18.3]	0000 to FFFF H	Ind: 10	1/UHABR
d046	**CB/SCB TrnsmData** **(for F1680)** **Process data exchange with the COM BOARD (CBx or SCBx):** Display of data transmitted via the COM BOARD i01: Display word 1 i02: Display word 2 **...** i10: Display word 10 PNU=416 Hex; Type=L2; Normalization: 1==1 Hex; Block diag.: [18.6]	0000 to FFFF H	Ind: 10	1/UHABR
d048	**dynParTransDiagn** **(for B150)** Diagnostic information for dynamic parameter transfer -1: No error on transfer of parameter 0: Illegal parameter number selected (via H282). Selected parameter does not exist 1: Parameter value cannot be changed (viewing parameter) 2: Lower or upper value limit exceeded 3: Incorrect index selected via H283 4: Not an array parameter (H283 must be 0!) 11: No parameterizing enable signal (P953 must contain value "16"!) 12: Password missing (P051 is not appropriately set!) 17: Parameter cannot be changed in current operational state of converter 101: Parameter is currently deactivated (P051 is not appropriately set!) 104: Parameter value is illegal 105: Array parameter (H283 may not be 0 !) PNU=418 Hex; Type=I2; Normalization: 1==1; Block diag.: [15.4]	-1 to 255	Ind: None	1/UHABR

PNU *: Ack. par.	OP1 parameter name Description	Value range [unit] Selection text	No. of indices Factory setting	Read Write (Access / State)
H050	**Language** Language of plaintext display on optional operator panel OP1 and in the PC service program SIMOVIS 0: German 1: English 2: Spanish 3: French 4: Italian In the software version 1.0 only the language "German" is available PNU=41A Hex; Type=O2; Normalization: 1==1	0 to 4 Deutsch English Español Français Italiano	Ind: None FS=0	1/UHABR 1/UHABR
H051	**AccessLevel HPar** **Code parameter** 0 = d and H parameters can be read only 1 = **Standard mode** for technology parameters: All technology parameters can be changed and read; however, the binector and connector selection switches can only be changed in the "Not running" state (basic unit status bit = 2) 2 = **Expert mode** for technology parameters: As for setting 1, but binector and connector selection switches can be changed in all operational states 3 = **Logbook mode:** Only the d parameters and those H parameters which are not set to the factory value can be read; no parameter settings can be changed PNU=41B Hex; Type=O2; Normalization: 1==1	0 to 3 Read param. Standard Expert Logbook	Ind: None FS=1	
d053	**Bin>ConBitField1** **(for F1630)** **Binector/connector converter 1:** Display of bit field 4 (first converted binector set) indicates states of bits in bit field by means of illuminated bars on the 7-segment display 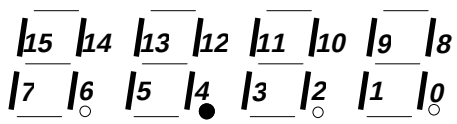 PNU=41D Hex; Type=V2; Normalization: 1==1 Hex; Block diag.: [20.4]		Ind: None	1/UHABR
d054	**Bin>ConBitField2** **(for F1640)** **Binector/connector converter 2:** Display of bit field 5 (second converted binector set) as for d053 PNU=41E Hex; Type=V2; Normalization: 1==1 Hex; Block diag.: [20.8]		Ind: None	1/UHABR
d055	**Bin>ConBitField3** **(for F1650)** **Binector/connector converter 3:** Display of bit field 6 (third converted binector set) as for d053 PNU=41F Hex; Type=V2; Normalization: 1==1 Hex; Block diag.: [20.4]		Ind: None	1/UHABR

PNU *: Ack. par.	OP1 parameter name Description	Value range [unit] Selection text	No. of indices Factory setting	Read Write (Access / State)
d056	**Con>BinBitField1** **(for F410)** **Connector/binector converter 1:** Display bit field 1 (first converted connector) indicates states of bits in bit field by means of illuminated bars on the 7-segment display 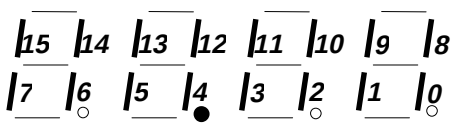 PNU=420 Hex; Type=V2; Normalization: 1==1 Hex; Block diag.: [19.8]		Ind: None	1/UHABR
d057	**Con>BinBitField2** **(for F420)** **Connector/binector converter 2:** Display of bit field 2 (second converted connector) as for d056 PNU=421 Hex; Type=V2; Normalization: 1==1 Hex; Block diag.: [19.8]		Ind: None	1/UHABR
d058	**Con>BinBitField3** **(for F430)** **Connector/binector converter 3:** Display of bit field 3 (third converted connector) as for d056 PNU=422 Hex; Type=V2; Normalization: 1==1 Hex; Block diag.: [19.4]		Ind: None	1/UHABR
d060	**TeCntr ActValue** **(for F1240)** **Technology controller:** Display of actual value (summation value) selected in H330 PNU=424 Hex; Type=I2; Normalization: 1==0.1 %; Block diag.: [21.2]	-200.0 to 199.9 [%]	Ind: None	1/UHABR
d061	**TeCntr Setpoint** **(for F1240)** **Technology controller:** Display of setpoint (summation value) selected in H334 PNU=425 Hex; Type=I2; Normalization: 1==0.1 %; Block diag.: [21.2]	-200.0 to 199.9 [%]	Ind: None	1/UHABR
d062	**TeCntr P-GainFac** **(for F1240)** **Technology controller:** Display of effective P-gain factor PNU=426 Hex; Type=O2; Normalization: 1==0.01; Block diag.: [21.3]	0.00 to 30.00	Ind: None	1/UHABR
d063	**TeCntr Output** **(for F1240)** **Technology controller:** Display of technology controller output PNU=427 Hex; Type=I2; Normalization: 1==0.1 %; Block diag.: [21.8]	-200.0 to 199.9 [%]	Ind: None	1/UHABR
d065	**ComfRFG Input** **(for F1010)** **Comfort ramp-function generator:** Display of ramp-function generator input PNU=429 Hex; Type=I2; Normalization: 1==0.1 %; Block diag.: [22.3]	-200.0 to 199.9 [%]	Ind: None	1/UHABR
d066	**ComfRFG Output** **(for F1010)** **Comfort ramp-function generator:** Display of ramp-function generator output PNU=42A Hex; Type=I2; Normalization: 1==0.1 %; Block diag.: [22.5]	-200.0 to 199.9 [%]	Ind: None	1/UHABR
d067	**MotorPot. Output** **(for F670)** **Motorized potentiometer:** Display of motorized potentiometer setpoint PNU=42B Hex; Type=I2; Normalization: 1==0.1 %; Block diag.: [23.8]	-200.0 to 199.9 [%]	Ind: None	1/UHABR
d068	**WobbleGen. Outpt** **(for F1020)** **Wobble generator:** Display of wobbler signal PNU=42C Hex; Type=I2; Normalization: 1==0.1 %; Block diag.: [24.7]	-200.0 to 199.9 [%]	Ind: None	1/UHABR
d070	**MULDIV1 Output** **(for F740)** **High-resolution multiplier/divider 1:** Display of result PNU=42E Hex; Type=I2; Normalization: 1==0.1 %; Block diag.: [26.5]	-200.0 to 199.9 [%]	Ind: None	1/UHABR
d071	**MULDIV2 Output** **(for F910)** **High-resolution multiplier/divider 2:** Display of result PNU=42F Hex; Type=I2; Normalization: 1==0.1 %; Block diag.: [26.7]	-200.0 to 199.9 [%]	Ind: None	1/UHABR

PNU *: Ack. par.	OP1 parameter name Description	Value range [unit] Selection text	No. of indices Factory setting	Read Write (Access / State)
d072	**MULDIV3 Output** **(for F1150)** **High-resolution multiplier/divider 3:** Display of result PNU=430 Hex; Type=I2; Normalization: 1==0.1 %; Block diag.: [26.5]	-200.0 to 199.9 [%]	Ind: None	1/UHABR
d075	**n>v_Calc Input** **(for B50)** **Speed/velocity calculator:** Display of actual speed selected in H690 PNU=433 Hex; Type=I2; Norm.: 1==0.1% of n_rated Block diag.: [31.3]	-100.0 to 100.0 [%]	Ind: None	1/UHABR
d076	**n>v_Calc Output** **(for B50)** **Speed/velocity calculator:** Display of actual velocity PNU=434 Hex; Type=I2; Normalization: 1==0.001 m/s; Block diag.: [31.7]	-32.768 to 32.767 [m/s]	Ind: None	1/UHABR
d077	**v>n_Calc Input** **(for F1230)** **Velocity/speed calculator:** Display of setpoint velocity selected in H691 PNU=435 Hex; Type=I2; Normalization: 1==0.001 m/s; Block diag.: [31.3]	-32.768 to 32.767 [m/s]	Ind: None	1/UHABR
d078	**v>n_Calc Output** **(for F1230)** **Velocity/speed calculator:** Display of setpoint speed PNU=436 Hex; Type=I2; Norm.: 1==0.1% of n_rated Block diag.: [31.7]	-200.0 to 199.9 [%]	Ind: None	1/UHABR
d080	**ActiveParSet** **(for F200)** **Parameter set switchover:** Display of currently active parameter set PNU=438 Hex; Type=O2; Normalization: 1==1; Block diag.: [36.1]	1 to 4	Ind: None	1/UHABR
d096	**Int.Fact.Disp6** PNU=448 Hex; Type=O2; Normalization: 1==1	0 to 65535	Ind: None	1/UHABR
d097	**Int.Fact.Disp7** PNU=449 Hex; Type=L2		Ind: 16	1/UHABR
d098	**Int.Fact.Disp8** PNU=44A Hex; Type=O2; Normalization: 1==1%	0 to 100 [%]	Ind: 3	1/UHABR
d099	**Int.Fact.Disp9** PNU=44B Hex; Type=L2		Ind: 28	1/UHABR

Analog Inputs (F10 to F50) See also Chapter 3.3

Analog input terminal 50 (terminal 50, 51)				**F10**
H100 *****	**AE50 SignalType** Selection of analog input mode (signal type) 0 = Voltage input 0 to ±10 V 1 = Current input 0 to 20 mA 2 = Current input 4 to 20 mA PNU=44C Hex; Type=O2; Normalization: 1==1; Block diag.: [2.2]	0 to 2 +/- 10V 0 .. 20 mA 4 .. 20 mA	Ind: None FS=0	1/UHABR 1/UHAB
H101	**AE50 Normaliz._%** Specification of %-value which is to represent an input voltage of 10 V or an input current of 20 mA at the analog input The following generally applies: For voltage input: H101[%] = 10V * Y / X X .... Input voltage in volts Y .... %-value which represents the input voltage X For current input: H101[%] = 20mA * Y / X X .... Input current in mA Y .... %-value which represents the input current X PNU=44D Hex; Type=I2; Normalization: 1==1 %; Block diag.: [2.4]	-1000 to 1000 [%]	Ind: None FS=100	1/UHABR 1/UHABR
H102	**AE50 Offset_%** Additive value for analog input PNU=44E Hex; Type=I2; Normalization: 1==0.01 %; Block diag.: [2.4]	-200.00 to 199.99 [%]	Ind: None FS=0.00	1/UHABR 1/UHABR

PNU *: Ack. par.	OP1 parameter name Description	Value range [unit] Selection text	No. of indices Factory setting	Read Write (Access / State)
H103 *	**AE50 Sign/Abs** Selection of signal injection mode at analog input 0 = Signal injection according to sign 1 = Injection of absolute value of signal 2 = Signed signal injection, inverted 3 = Injection of absolute value of signal, inverted PNU=44F Hex; Type=O2; Normalization: 1==1; Block diag.: [2.5]	0 to 3 y= Signal y= |Signal| y= -Signal y=-|Signal|	Ind: None FS=0	1/UHABR 1/UHAB
H104 *	**AE50 B_SignRev** Selection of control bit for sign reversal at analog input 0 = No sign reversal 1 = Sign reversal 2 = No sign reversal 3 = Sign reversal controlled by B003 (”1” = sign reversal) 4 = Sign reversal controlled by B004 (”1” = sign reversal) etc. PNU=450 Hex; Type=O2; Normalization: 1==1; Block diag.: [2.6]	0 to 200	Ind: None FS=0	1/UHABR 1/UHAB
H105	**AE50 FiltTime_ms** Filter time for analog input (a hardware filtering operation of approx. 1 ms must be added) PNU=451 Hex; Type=O2. Normalization: 1==1 ms; Block diag.: [2.7]	0 to 10000 [ms]	Ind: None FS=0	1/UHABR 1/UHABR
H106 *	**AE50 B_Enabling** Enabling of analog input 0 = Input not enabled 1 = Input enabled at all times 2 = Input not enabled 3 = Enabling of input controlled by B003 (”1” = enabled) 4 = Enabling of input controlled by B004 (”1” = enabled) etc. PNU=452 Hex; Type=O2; Normalization: 1==1; Block diag.: [2.7]	0 to 200	Ind: None FS=1	1/UHABR 1/UHAB

Analog input terminal 52 (terminal 52, 53)				**F20**
H110 *	**AE52 SignalType** as for H100 PNU=456 Hex; Type=O2; Normalization: 1==1; Block diag.: [2.2]	0 to 2	Ind: None FS=0	1/UHABR 1/UHAB
H111	**AE52 Normaliz._%** as for H101 PNU=457 Hex; Type=I2; Normalization: 1==1 %; Block diag.: [2.4]	-1000 to 1000 [%]	Ind: None FS=100	1/UHABR 1/UHABR
H112	**AE52 Offset_%** as for H102 PNU=458 Hex; Type=I2; Normalization: 1==0.01 %; Block diag.: [2.4]	-200.00 to 199.99 [%]	Ind: None FS=0.00	1/UHABR 1/UHABR
H113 *	**AE52 Sign/Abs** as for H103 PNU=459 Hex; Type=O2; Normalization: 1==1; Block diag.: [2.5]	0 to 3	Ind: None FS=0	1/UHABR 1/UHAB
H114 *	**AE52 B_SignRev** as for H104 PNU=45A Hex; Type=O2; Normalization: 1==1; Block diag.: [2.6]	0 to 200	Ind: None FS=0	1/UHABR 1/UHAB
H115	**AE52 FiltTime_ms** as for H105 PNU=45B Hex; Type=O2. Normalization: 1==1 ms; Block diag.: [2.7]	0 to 10000 [ms]	Ind: None FS=0	1/UHABR 1/UHABR
H116 *	**AE52 B_Enabling** as for H106 PNU=45C Hex; Type=O2; Normalization: 1==1; Block diag.: [2.7]	0 to 200	Ind: None FS=1	1/UHABR 1/UHAB

Analog input 54 (terminal 54, 55)				**F30**
H120 *	**AE54 SignalType** as for H100 PNU=460 Hex; Type=O2; Normalization: 1==1; Block diag.: [3.2]	0 to 2	Ind: None FS=0	1/UHABR 1/UHAB
H121	**AE54 Normaliz._%** as for H101 PNU=461 Hex; Type=I2; Normalization: 1==1 %; Block diag.: [3.4]	-1000 to 1000 [%]	Ind: None FS=100	1/UHABR 1/UHABR
H122	**AE54 Offset_%** as for H102 PNU=462 Hex; Type=I2; Normalization: 1==0.01 %; Block diag.: [3.4]	-200.00 to 199.99 [%]	Ind: None FS=0.00	1/UHABR 1/UHABR

PNU *: Ack. par.	OP1 parameter name Description	Value range [unit] Selection text	No. of indices Factory setting	Read Write (Access / State)
H123 *	**AE54 Sign/Abs** as for H103 PNU=463 Hex; Type=O2; Normalization: 1==1; Block diag.: [3.5]	0 to 3	Ind: None FS=0	1/UHABR 1/UHAB
H124 *	**AE54 B_SignRev** as for H104 PNU=464 Hex; Type=O2; Normalization: 1==1; Block diag.: [3.6]	0 to 200	Ind: None FS=0	1/UHABR 1/UHAB
H125	**AE54 FiltTime_ms** as for H105 PNU=465 Hex; Type=O2. Normalization: 1==1 ms; Block diag.: [3.7]	0 to 10000 [ms]	Ind: None FS=0	1/UHABR 1/UHABR
H126 *	**AE54 B_Enabling** as for H106 PNU=466 Hex; Type=O2; Normalization: 1==1; Block diag.: [3.7]	0 to 200	Ind: None FS=1	1/UHABR 1/UHAB

Analog input terminal 56 (terminal 56, 57)				**F40**
H130 *	**AE56 SignalType** as for H100 PNU=46A Hex; Type=O2; Normalization: 1==1; Block diag.: [3.2]	0 to 2	Ind: None FS=0	1/UHABR 1/UHAB
H131	**AE56 Normaliz._%** as for H101 PNU=46B Hex; Type=I2; Normalization: 1==1 %; Block diag.: [3.4]	-1000 to 1000 [%]	Ind: None FS=100	1/UHABR 1/UHABR
H132	**AE56 Offset_%** as for H102 PNU=46C Hex; Type=I2; Normalization: 1==0.01 %; Block diag.: [3.4]	-200.00 to 199.99 [%]	Ind: None FS=0.00	1/UHABR 1/UHABR
H133 *	**AE56 Sign/Abs** as for H103 PNU=46D Hex; Type=O2; Normalization: 1==1; Block diag.: [3.5]	0 to 3	Ind: None FS=0	1/UHABR 1/UHAB
H134 *	**AE56 B_SignRev** as for H104 PNU=46E Hex; Type=O2; Normalization: 1==1; Block diag.: [3.6]	0 to 200	Ind: None FS=0	1/UHABR 1/UHAB
H135	**AE56 FiltTime_ms** as for H105 PNU=46F Hex; Type=O2. Normalization: 1==1 ms; Block diag.: [3.7]	0 to 10000 [ms]	Ind: None FS=0	1/UHABR 1/UHABR
H136 *	**AE56 B_Enabling** as for H106 PNU=470 Hex; Type=O2; Normalization: 1==1; Block diag.: [3.7]	0 to 200	Ind: None FS=1	1/UHABR 1/UHAB

Analog input terminal 58 (terminal 58, 59)				**F50**
H140 *	**AE58 SignalType** as for H100 PNU=474 Hex; Type=O2; Normalization: 1==1; Block diag.: [3.2]	0 to 2	Ind: None FS=0	1/UHABR 1/UHAB
H141	**AE58 Normaliz._%** as for H101 PNU=475 Hex; Type=I2; Normalization: 1==1 %; Block diag.: [3.4]	-1000 to 1000 [%]	Ind: None FS=100	1/UHABR 1/UHABR
H142	**AE58 Offset_%** as for H102 PNU=476 Hex; Type=I2; Normalization: 1==0.01 %; Block diag.: [3.4]	-200.00 to 199.99 [%]	Ind: None FS=0.00	1/UHABR 1/UHABR
H143 *	**AE58 Sign/Abs** as for H103 PNU=477 Hex; Type=O2; Normalization: 1==1; Block diag.: [3.5]	0 to 3	Ind: None FS=0	1/UHABR 1/UHAB
H144 *	**AE58 B_SignRev** as for H104 PNU=478 Hex; Type=O2; Normalization: 1==1; Block diag.: [3.6]	0 to 200	Ind: None FS=0	1/UHABR 1/UHAB
H145	**AE58 FiltTime_ms** as for H105 PNU=479 Hex; Type=O2. Normalization: 1==1 ms; Block diag.: [3.7]	0 to 10000 [ms]	Ind: None FS=0	1/UHABR 1/UHABR
H146 *	**AE58 B_Enabling** as for H106 PNU=47A Hex; Type=O2; Normalization: 1==1; Block diag.: [3.7]	0 to 200	Ind: None FS=1	1/UHABR 1/UHAB

Analog outputs (F1690, F1700) See also Chapter 3.4

Analog output terminal 61 (terminal 61, 62)				**F1690**
H150 *	**AA61 C_OutpValue** Selection of connector value to be output at the analog output 0 = Fixed value 0 1 = Fixed value 100 % 2 = Fixed value 0 3 = Connector K003 4 = Connector K004 etc. PNU=47E Hex; Type=O2; Normalization: 1==1; Block diag.: [4.1]	0 to 180	Ind: None FS=0	1/UHABR 1/UHAB

PNU *: Ack. par.	OP1 parameter name Description	Value range [unit] Selection text	No. of indices Factory setting	Read Write (Access / State)
H151 *	**AA61 Sign/Abs** Selection of signal injection mode at analog output 0 = Signal injection according to sign 1 = Injection of absolute value of signal 2 = Signed signal injection, inverted 3 = Injection of absolute value of signal, inverted PNU=47F Hex; Type=O2; Normalization: 1==1; Block diag.: [4.2]	0 to 3 y= Signal y= |Signal| y= -Signal y=-|Signal|	Ind: None FS=0	1/UHABR 1/UHAB
H152	**AA61 FiltTime_ms** Filter time for the analog output PNU=480 Hex; Type=O2. Normalization: 1==1 ms; Block diag.: [4.3]	0 to 10000 [ms]	Ind: None FS=0	1/UHABR 1/UHABR
H153	**AA61 Normaliz._V** Normalization of analog output y[V] = x * H153 / 100% x = Normalization input (corresponds to filter output) y = Normalization output (corresponds to output voltage at analog output with an offset of 0 and circuit as voltage output) PNU=481 Hex; Type=I2; Normalization: 1==0.01 V; Block diag.: [4.4]	-200.00 to 200.00 [V]	Ind: None FS=10.00	1/UHABR 1/UHABR
H154	**AA61 Offset _V** Additive value for analog output PNU=482 Hex; Type=I2; Normalization: 1==0.01 V; Block diag.: [4.5]	-10.00 to 10.00 [V]	Ind: None FS=0.00	1/UHABR 1/UHABR
H155 *	**AA61 SignalType** Selection of analog output mode (signal type) 0 = Voltage output 0 to ±10 V 1 = Current output 0 to 20 mA 2 = Current output 4 to 20 mA PNU=483 Hex; Type=O2; Normalization: 1==1; Block diag.: [4.5]	0 to 2	Ind: None FS=0	1/UHABR 1/UHAB

Analog output terminal 63 (terminal 63, 64)				**F1700**
H160 *	**AA63 C_OutpValue** as for H150 PNU=488 Hex; Type=O2; Normalization: 1==1; Block diag.: [4.1]	0 to 180	Ind: None FS=0	1/UHABR 1/UHAB
H161 *	**AA63 Sign/Abs** as for H151 PNU=489 Hex; Type=O2; Normalization: 1==1; Block diag.: [4.2]	0 to 3	Ind: None FS=0	1/UHABR 1/UHAB
H162	**AA63 FiltTime_ms** as for H152 PNU=48A Hex; Type=O2. Normalization: 1==1 ms; Block diag.: [4.3]	0 to 10000 [ms]	Ind: None FS=0	1/UHABR 1/UHABR
H163	**AA63 Normaliz._V** as for H153 PNU=48B Hex; Type=I2; Normalization: 1==0.01 V; Block diag.: [4.4]	-200.00 to 200.00 [V]	Ind: None FS=10.00	1/UHABR 1/UHABR
H164	**AA63 Offset _V** as for H154 PNU=48C Hex; Type=I2; Normalization: 1==0.01 V; Block diag.: [4.5]	-10.00 to 10.00 [V]	Ind: None FS=0.00	1/UHABR 1/UHABR
H165 *	**AA63 SignalType** as for H155 PNU=48D Hex; Type=O2; Normalization: 1==1; Block diag.: [4.5]	0 to 2	Ind: None FS=0	1/UHABR 1/UHAB

PNU *: Ack. par.	OP1 parameter name Description	Value range [unit] Selection text	No. of indices Factory setting	Read Write (Access / State)

Binary inputs (F60 to F130)

Binary input terminal 77				F60
Function: Depending on the state of terminal 77, either the signal determined by H170 or the value from H171 is applied to connector K010.				
H170 *	**BE77=1 C_SetVal.** Selection of signal to be applied to connector when terminal state = 1 0 = Fixed value 0 1 = Fixed value 100 % 2 = Fixed value 0 3 = Connector K003 4 = Connector K004 etc. PNU=492 Hex; Type=O2; Normalization: 1==1; Block diag.: [5.5]	0 to 180	Ind: None FS=0	1/UHABR 1/UHAB
H171 *	**BE77=0 SetVal** Value which is applied to connector when terminal state = 0 PNU=493 Hex; Type=I2; Normalization: 1==0.01%; Block diag.: [5.6]	-200.00 to 199.99 [%]	Ind: None FS=0.00	1/UHABR 1/UHAB

Binary input terminal 78				F70
Function: Depending on the state of terminal 78, either the signal determined by H172 or the value from H173 is applied to connector K011.				
H172 *	**BE78=1 C_SetVal.** as for H170 PNU=494 Hex; Type=O2; Normalization: 1==1; Block diag.: [5.5]	0 to 180	Ind: None FS=0	1/UHABR 1/UHAB
H173 *	**BE78=0 SetVal** as for H171 PNU=495 Hex; Type=I2; Normalization: 1==0.01%; Block diag.: [5.6]	-200.00 to 199.99 [%]	Ind: None FS=0.00	1/UHABR 1/UHAB

Binary input terminal 79				F80
Function: Depending on the state of terminal 79, either the signal determined by H174 or the value from H175 is applied to connector K012.				
H174 *	**BE79=1 C_SetVal.** as for H170 PNU=496 Hex; Type=O2; Normalization: 1==1; Block diag.: [5.5]	0 to 180	Ind: None FS=0	1/UHABR 1/UHAB
H175 *	**BE79=0 SetVal.** as for H171 PNU=497 Hex; Type=I2; Normalization: 1==0.01%; Block diag.: [5.6]	-200.00 to 199.99 [%]	Ind: None FS=0.00	1/UHABR 1/UHAB

Binary input terminal 80				F90
Function: Depending on the state of terminal 80, either the signal determined by H176 or the value from H177 is applied to connector K013.				
H176 *	**BE80=1 C_SetVal.** as for H170 PNU=498 Hex; Type=O2; Normalization: 1==1; Block diag.: [5.5]	0 to 180	Ind: None FS=0	1/UHABR 1/UHAB
H177 *	**BE80=0 SetVal.** as for H171 PNU=499 Hex; Type=I2; Normalization: 1==0.01%; Block diag.: [5.6]	-200.00 to 199.99 [%]	Ind: None FS=0.00	1/UHABR 1/UHAB

Binary input terminal 81				F100
Function: Depending on the state of terminal 81, either the signal determined by H178 or the value from H179 is applied to connector K014.				
H178 *	**BE81=1 C_SetVal.** as for H170 PNU=49A Hex; Type=O2; Normalization: 1==1; Block diag.: [6.5]	0 to 180	Ind: None FS=0	1/UHABR 1/UHAB
H179 *	**BE81=0 SetVal.** as for H171 PNU=49B Hex; Type=I2; Normalization: 1==0.01%; Block diag.: [6.6]	-200.00 to 199.99 [%]	Ind: None FS=0.00	1/UHABR 1/UHAB

Binary input terminal 82				F110
Function: Depending on the state of terminal 82, either the signal determined by H180 or the value from H181 is applied to connector K015.				
H180 *	**BE82=1 C_SetVal.** as for H170 PNU=49C Hex; Type=O2; Normalization: 1==1; Block diag.: [6.5]	0 to 180	Ind: None FS=0	1/UHABR 1/UHAB

PNU *: Ack. par.	OP1 parameter name Description	Value range [unit] Selection text	No. of indices Factory setting	Read Write (Access / State)
H181 *	**BE82=0 SetVal.** as for H171 PNU=49D Hex; Type=I2; Normalization: 1==0.01%; Block diag.: [6.6]	-200.00 to 199.99 [%]	Ind: None FS=0.00	1/UHABR 1/UHAB

Binary input terminal 83				**F120**
Function: Depending on the state of terminal 83, either the signal determined by H182 or the value from H183 is applied to connector K016.				
H182 *	**BE83=1 C_SetVal.** as for H170 PNU=49E Hex; Type=O2; Normalization: 1==1; Block diag.: [6.5]	0 to 180	Ind: None FS=0	1/UHABR 1/UHAB
H183 *	**BE83=0 SetVal.** as for H171 PNU=49F Hex; Type=I2; Normalization: 1==0.01%; Block diag.: [6.6]	-200.00 to 199.99 [%]	Ind: None FS=0.00	1/UHABR 1/UHAB

Binary input terminal 84				**F130**
Function: Depending on the state of terminal 84, either the signal determined by H184 or the value from H185 is applied to connector K017.				
H184 *	**BE84=1 C_SetVal.** as for H170 PNU=4A0 Hex; Type=O2; Normalization: 1==1; Block diag.: [6.5]	0 to 180	Ind: None FS=0	1/UHABR 1/UHAB
H185 *	**BE84=0 SetVal.** as for H171 PNU=4A1 Hex; Type=I2; Normalization: 1==0.01%; Block diag.: [6.6]	-200.00 to 199.99 [%]	Ind: None FS=0.00	1/UHABR 1/UHAB

Binary outputs (F1710 to F1750)

Binary output terminal 87				**F1710**
H190 *	**BA87SourceBinect** Selection of binector to be applied to the terminal 0 = Fixed value 0 1 = Fixed value 1 2 = Fixed value 0 3 = Binector B003 4 = Binector B004 etc. PNU=4A6 Hex; Type=O2; Normalization: 1==1; Block diag.: [7.1]	0 to 200	Ind: None FS=0	1/UHABR 1/UHAB
H191 *	**BA87 ONDelay_s** (ON delay) Delay in signal applied to terminal on transition from log. "0" to log. "1" (transition from log. "1" to log. "0" is instantaneous) Owing to the ON delay, a positive edge is switched through only if the signal level has remained continuously at "1" for the period of time parameterized in H191. If a negative input edge occurs during this period, the ON delay timer is restarted (re-triggered). PNU=4A7 Hex; Type= O2; Normalization: 1==0.01s; Block diag.: [7.2]	0.00 to 300.00 [s]	Ind: None FS=0.00	1/UHABR 1/UHAB
H192	**BA87 Inversion** (inversion) 0 = No inversion of binary output 1 = Inversion of binary output PNU=4A8 Hex; Type=O2; Normalization: 1==1; Block diag.: [7.3]	0 to 1 y= Q y= /Q	Ind: None FS=0	1/UHABR 1/UHABR

Binary output terminal 88				**F1720**
H193 *	**BA88SourceBinect** as for H190 PNU=4A9 Hex; Type=O2; Normalization: 1==1; Block diag.: [7.1]	0 to 200	Ind: None FS=0	1/UHABR 1/UHAB
H194 *	**BA88 ONDelay_s** as for H191 PNU=4AA Hex; Type= O2; Normalization: 1==0.01s; Block diag.: [7.2]	0.00 to 300.00 [s]	Ind: None FS=0.00	1/UHABR 1/UHAB
H195	**BA88 Inversion** as for H192 PNU=4AB Hex; Type=O2; Normalization: 1==1; Block diag.: [7.3]	0 to 1	Ind: None FS=0	1/UHABR 1/UHABR

Binary output terminal 89				**F1730**
H196 *	**BA89SourceBinect** as for H190 PNU=4AC Hex; Type=O2; Normalization: 1==1; Block diag.: [7.1]	0 to 200	Ind: None FS=0	1/UHABR 1/UHAB

PNU *: Ack. par.	OP1 parameter name Description	Value range [unit] Selection text	No. of indices Factory setting	Read Write (Access / State)
H197 *	**BA89 ONDelay_s** as for H191 PNU=4AD Hex; Type= O2; Normalization: 1==0.01s; Block diag.: [7.2]	0.00 to 300.00 [s]	Ind: None FS=0.00	1/UHABR 1/UHAB
H198	**BA89 Inversion** as for H192 PNU=4AE Hex; Type=O2; Normalization: 1==1; Block diag.: [7.3]	0 to 1	Ind: None FS=0	1/UHABR 1/UHABR

Binary output terminal 90				**F1740**
H199 *	**BA90SourceBinect** as for H190 PNU=4AF Hex; Type=O2; Normalization: 1==1; Block diag.: [7.1]	0 to 200	Ind: None FS=0	1/UHABR 1/UHAB
H200 *	**BA90 ONDelay_s** as for H191 PNU=4B0 Hex; Type= O2; Normalization: 1==0.01s; Block diag.: [7.2]	0.00 to 300.00 [s]	Ind: None FS=0.00	1/UHABR 1/UHAB
H201	**BA90 Inversion** as for H192 PNU=4B1 Hex; Type=O2; Normalization: 1==1; Block diag.: [7.3]	0 to 1	Ind: None FS=0	1/UHABR 1/UHABR

Binary output terminal 91				**F1750**
H202 *	**BA91SourceBinect** as for H190 PNU=4B2 Hex; Type=O2; Normalization: 1==1; Block diag.: [7.1]	0 to 200	Ind: None FS=0	1/UHABR 1/UHAB
H203 *	**BA91 ONDelay_s** as for H191 PNU=4B3 Hex; Type= O2; Normalization: 1==0.01s; Block diag.: [7.2]	0.00 to 300.00 [s]	Ind: None FS=0.00	1/UHABR 1/UHAB
H204	**BA91 Inversion** as for H192 PNU=4B4 Hex; Type=O2; Normalization: 1==1; Block diag.: [7.3]	0 to 1	Ind: None FS=0	1/UHABR 1/UHABR

Fixed setpoints (B160, F210 to F340)

Function: The value set in the parameter is applied to the specified connector.
Four different datasets for these parameters can be selected by means of the parameter set switchover function.

Note: In software version 1.0 the parameters H210 to H223 were acknowledgement parameters.

H210	**K020 FixedSetpnt** **(F210)** is applied to K020 PNU=4BA Hex; Type=I2; Normalization: 1==0.01 %; Block diag.: [8.1]	-200.00 to 199.99 [%]	Ind: 4 FS=0.00	1/UHABR 1/UHABR
H211	**K021 FixedSetpnt** **(F220)** is applied to K021 PNU=4BB Hex; Type=I2; Normalization: 1==0.01 %; Block diag.: [8.1]	-200.00 to 199.99 [%]	Ind: 4 FS=0.00	1/UHABR 1/UHABR
H212	**K022 FixedSetpnt** **(F230)** is applied to K022 PNU=4BC Hex; Type=I2; Normalization: 1==0.01 %; Block diag.: [8.1]	-200.00 to 199.99 [%]	Ind: 4 FS=0.00	1/UHABR 1/UHABR
H213	**K023 FixedSetpnt** **(F240)** is applied to K023 PNU=4BD Hex; Type=I2; Normalization: 1==0.01 %; Block diag.: [8.1]	-200.00 to 199.99 [%]	Ind: 4 FS=0.00	1/UHABR 1/UHABR
H214	**K024 FixedSetpnt** **(F250)** is applied to K024 PNU=4BE Hex; Type=I2; Normalization: 1==0.01 %; Block diag.: [8.1]	-200.00 to 199.99 [%]	Ind: 4 FS=0.00	1/UHABR 1/UHABR
H215	**K025 FixedSetpnt** **(F260)** is applied to K025 PNU=4BF Hex; Type=I2; Normalization: 1==0.01 %; Block diag.: [8.1]	-200.00 to 199.99 [%]	Ind: 4 FS=0.00	1/UHABR 1/UHABR
H216	**K026 FixedSetpnt** **(F270)** is applied to K026 PNU=4C0 Hex; Type=I2; Normalization: 1==0.01 %; Block diag.: [8.1]	-200.00 to 199.99 [%]	Ind: 4 FS=0.00	1/UHABR 1/UHABR
H217	**K027 FixedSetpnt** **(F280)** is applied to K027 PNU=4C1 Hex; Type=I2; Normalization: 1==0.01 %; Block diag.: [8.1]	-200.00 to 199.99 [%]	Ind: 4 FS=0.00	1/UHABR 1/UHABR
H218	**K028 FixedSetpnt** **(F290)** is applied to K028 PNU=4C2 Hex; Type=I2; Normalization: 1==0.01 %; Block diag.: [8.1]	-200.00 to 199.99 [%]	Ind: 4 FS=0.00	1/UHABR 1/UHABR

PNU *: Ack. par.	OP1 parameter name Description	Value range [unit] Selection text	No. of indices Factory setting	Read Write (Access / State)
H219	**K029 FixedSetpnt** **(F300)** is applied to K029 PNU=4C3 Hex; Type=I2; Normalization: 1==0.01 %; Block diag.: [8.1]	-200.00 to 199.99 [%]	Ind: 4 FS=0.00	1/UHABR 1/UHABR
H220	**K030 FixedSetpnt** **(F310)** is applied to K030 PNU=4C4 Hex; Type=I2; Normalization: 1==0.01 %; Block diag.: [8.1]	-200.00 to 199.99 [%]	Ind: 4 FS=0.00	1/UHABR 1/UHABR
H221	**K031 FixedSetpnt** **(F320)** is applied to K031 PNU=4C5 Hex; Type=I2; Normalization: 1==0.01 %; Block diag.: [8.1]	-200.00 to 199.99 [%]	Ind: 4 FS=0.00	1/UHABR 1/UHABR
H222	**K032 FixedSetpnt** **(F330)** is applied to K032 PNU=4C6 Hex; Type=I2; Normalization: 1==0.01 %; Block diag.: [8.1]	-200.00 to 199.99 [%]	Ind: 4 FS=0.00	1/UHABR 1/UHABR
H223	**K033 FixedSetpnt** **(F340)** is applied to K033 PNU=4C7 Hex; Type=I2; Normalization: 1==0.01 %; Block diag.: [8.1]	-200.00 to 199.99 [%]	Ind: 4 FS=0.00	1/UHABR 1/UHABR
H224	**K177 FixedSetpnt** (starting with software version 1.1) **(B160)** is applied to K177 PNU=4C8 Hex; Typ=I2; Normalization: 1==1; Block diag.: [8.3]	-32768 bis +32767	Ind: 4 FS=0	1/UHABR 1/UHABR

Fixed control bits (F350 to F400)

Function: The value set in the parameter is applied to the specified binector.
Four different datasets for these parameters can be selected by means of the parameter set switchover function

H230	**B024 Fixed Bit** **(F350)** is applied to B024 PNU=4CE Hex; Type=O2; Normalization: 1==1 Hex; Block diag.: [8.2]	0 to 1	Ind: 4 FS=0	1/UHABR 1/UHABR
H231	**B025 Fixed Bit** **(F360)** is applied to B025 PNU=4CF Hex; Type=O2; Normalization: 1==1 Hex; Block diag.: [8.2]	0 to 1	Ind: 4 FS=0	1/UHABR 1/UHABR
H232	**B026 Fixed Bit** **(F370)** is applied to B026 PNU=4D0 Hex; Type=O2; Normalization: 1==1 Hex; Block diag.: [8.2]	0 to 1	Ind: 4 FS=0	1/UHABR 1/UHABR
H233	**B027 Fixed Bit** **(F380)** is applied to B027 PNU=4D1 Hex; Type=O2; Normalization: 1==1 Hex; Block diag.: [8.2]	0 to 1	Ind: 4 FS=0	1/UHABR 1/UHABR
H234	**B028 Fixed Bit** **(F390)** is applied to B028 PNU=4D2 Hex; Type=O2; Normalization: 1==1 Hex; Block diag.: [8.2]	0 to 1	Ind: 4 FS=0	1/UHABR 1/UHABR
H235	**B029 Fixed Bit** **(F400)** is applied to B029 PNU=4D3 Hex; Type=O2; Normalization: 1==1 Hex; Block diag.: [8.2]	0 to 1	Ind: 4 FS=0	1/UHABR 1/UHABR

Connector displays (B60 to B105)

Note: In software version 1.2 and earlier, H240 to H245 are "offline parameters", i.e. they cannot be changed in the "R" state.

Connector display 1 **B60**

Function: The connector selected in the parameter is output in display parameter d020.

H240 *	**d020 C_Display** Selection of connector to be output in display parameter 0 = Fixed value 0 1 = Fixed value 100 % 2 = Fixed value 0 3 = Connector K003 4 = Connector K004 etc. PNU=4D8 Hex; Type=O2; Normalization: 1==1; Block diag.: [8.4]	0 to 180	Ind: None FS=0	1/UHABR 1/UHAB

PNU *: Ack. par.	OP1 parameter name Description	Value range [unit] Selection text	No. of indices Factory setting	Read Write (Access / State)
Connector display 2				**B70**
Function: The connector selected in the parameter is output in display parameter d021.				
H241 *	**d021 C_Display** as for H240 PNU=4D9 Hex; Type=O2; Normalization: 1==1; Block diag.: [8.4]	0 to 180	Ind: None FS=0	1/UHABR 1/UHAB

Connector display 3				**B80**
Function: The connector selected in the parameter is output in display parameter d022.				
H242 *	**d022 C_Display** as for H240 PNU=4DA Hex; Type=O2; Normalization: 1==1; Block diag.: [8.4]	0 to 180	Ind: None FS=0	1/UHABR 1/UHAB

Connector display 4				**B90**
Function: The connector selected in the parameter is output in display parameter d023.				
H243 *	**d023 C_Display** as for H240 PNU=4DB Hex; Type=O2; Normalization: 1==1; Block diag.: [8.4]	0 to 180	Ind: None FS=0	1/UHABR 1/UHAB

Connector display 5				**B100**
Function: The connector selected in the parameter is output in display parameter d024.				
H244 *	**d024 C_Display** as for H240 PNU=4DC Hex; Type=O2; Normalization: 1==1; Block diag.: [8.4]	0 to 180	Ind: None FS=0	1/UHABR 1/UHAB

High-resolution connector display				**B105**
Function: The connector selected in the parameter is filtered with $\tau \approx 300$ms and output in display parameter d025.				
H245 *	**d025 C_Display** as for H240 PNU=4DE Hex; Type=O2; Normalization: 1==1; Block diag.: [8.4]	0 to 180	Ind: None FS=0	1/UHABR 1/UHAB

Binector displays (B110 to B140)

Note: In software version 1.2 and earlier, H250 to H253 are "offline parameters", i.e. they cannot be changed in the "R" state.

Binector display 1				**B110**
Function: The binector selected in the parameter is output in display parameter d026.				
H250 *	**d026 B_Display** Selection of binector to be output in display parameter 0 = Fixed value 0 1 = Fixed value 1 2 = Fixed value 0 3 = Binector B003 4 = Binector B004 etc. PNU=4E2 Hex; Type=O2; Normalization: 1==1; Block diag.: [8.5]	0 to 200	Ind: None FS=0	1/UHABR 1/UHAB

Binector display 2				**B120**
Function: The binector selected in the parameter is output in display parameter d027.				
H251 *	**d027 B_Display** as for H250 PNU=4E3 Hex; Type=O2; Normalization: 1==1; Block diag.: [8.5]	0 to 200	Ind: None FS=0	1/UHABR 1/UHAB

Binector display 3				**B130**
Function: The binector selected in the parameter is output in display parameter d028.				
H252 *	**d028 B_Display** as for H250 PNU=4E4 Hex; Type=O2; Normalization: 1==1; Block diag.: [8.5]	0 to 200	Ind: None FS=0	1/UHABR 1/UHAB

Binector display 4				**B140**
Function: The binector selected in the parameter is output in display parameter d029.				
H253 *	**d029 B_Display** as for H250 PNU=4E5 Hex; Type=O2; Normalization: 1==1; Block diag.: [8.5]	0 to 200	Ind: None FS=0	1/UHABR 1/UHAB

PNU *: Ack. par.	OP1 parameter name Description	Value range [unit] Selection text	No. of indices Factory setting	Read Write (Access / State)

Triggering of fault messages (F1590 to F1620)

Function:	When the binector selected in the parameter assumes the log. "1" state, it triggers the specified fault message in the basic unit. The drive is automatically shut down (function as for "OFF1 = electrical OFF") and the fault bit (bit 3) in basic unit status word is set. The drive cannot restart after a fault message has been triggered unless 1. the fault has been eliminated (binector word=0) 2. the fault has been acknowledged and 3. a 0 → 1 edge transition of the OFF1 command from the basic unit has been detected.			
H260 *	**F120 B_FaultTrig** **(F1590)** Selection of binector which triggers fault message in log. "1" state 0 = 0 (no fault message) 1 = 1 (continuous fault message) 2 = 0 (no fault message) 3 = Binector B003 4 = Binector B004 etc. PNU=4EC Hex; Type=O2; Normalization: 1==1; Block diag.: [8.7]	0 to 200	Ind: None FS=0	1/UHABR 1/UHAB
H261 *	**F121 B_FaultTrig** as for H260 **(F1600)** PNU=4ED Hex; Type=O2; Normalization: 1==1; Block diag.: [8.7]	0 to 200	Ind: None FS=0	1/UHABR 1/UHAB
H262 *	**F122 B_FaultTrig** as for H260 **(F1610)** PNU=4EE Hex; Type=O2; Normalization: 1==1; Block diag.: [8.7]	0 to 200	Ind: None FS=0	1/UHABR 1/UHAB
H263 *	**F123 B_FaultTrig** as for H260 **(F1620)** PNU=4EF Hex; Type=O2; Normalization: 1==1; Block diag.: [8.7]	0 to 200	Ind: None FS=0	1/UHABR 1/UHAB

Triggering of alarm messages (B10 to B40)

Function:	When the binector selected in the parameter assumes the log. "1" state, it triggers the specified alarm in the basic unit. The drive is not shut down automatically, but an alarm message (e.g. "A100") is output on the basic unit and the alarm bit (bit 7) in basic unit status word is set. The alarm is reset automatically if the parameterized binector assumes the log. "0" state again.			
H264 *	**A100 B_AlarmTrig** **(B10)** Selection of binector which triggers an alarm in log. "1" state 0 = 0 (no alarm message) 1 = 1 (continuous alarm message) 2 = 0 (no alarm message) 3 = Binector B003 4 = Binector B004 etc. PNU=4F0 Hex; Type=O2; Normalization: 1==1; Block diag.: [9.2]	0 to 200	Ind: None FS=0	1/UHABR 1/UHAB
H265 *	**A101 B_AlarmTrig** as for H264 **(B20)** PNU=4F1 Hex; Type=O2; Normalization: 1==1; Block diag.: [9.2]	0 to 200	Ind: None FS=0	1/UHABR 1/UHAB
H266 *	**A102 B_AlarmTrig** as for H264 **(B30)** PNU=4F2 Hex; Type=O2; Normalization: 1==1; Block diag.: [9.2]	0 to 200	Ind: None FS=0	1/UHABR 1/UHAB
H267 *	**A103 B_AlarmTrig** as for H264 **(B40)** PNU=4F3 Hex; Type=O2; Normalization: 1==1; Block diag.: [9.2]	0 to 200	Ind: None FS=0	1/UHABR 1/UHAB

PNU *: Ack. par.	OP1 parameter name Description	Value range [unit] Selection text	No. of indices Factory setting	Read Write (Access / State)

Process data exchange with the basic unit (F170, F1660, F180, F1670, B150)

See also Chapter 3.8

(F180 is the display of actual values from the basic unit - see display parameters)

Status bits from basic unit (status words 1 and 2)				**F170**
Control bits to basic unit (control words 1 and 2)				**F1660**
H270 *****	**BU C_CntrWord1** Selection of connector to be applied to **control word 1** to the basic unit (word 1 in CB / TB dual port RAM) 0 = Fixed value 0 1 = Fixed value 100 % 2 = Bit-serial input via H272 3 = Connector K003 4 = Connector K004 etc. PNU=4F6 Hex; Type=O2; Normalization: 1==1; Block diag.: [11.3]	0 to 180	Ind: None FS=2	1/UHABR 1/UHAB
H271 *****	**BU C_CntrWord2** Selection of connector to be applied to **control word 2** to the basic unit (word 1 in CB / TB dual port RAM) 0 = Fixed value 0 1 = Fixed value 100 % 2 = Bit-serial input via H272 3 = Connector K003 4 = Connector K004 etc. PNU=4F7 Hex; Type=O2; Normalization: 1==1; Block diag.: [12.3]	0 to 180	Ind: None FS=2	1/UHABR 1/UHAB
H272 *****	**BU B_CntrWords** Selection of binectors for bit-serial input of **control words 1 and 2** to basic unit (effective only when H270 / H271 = 2) i01: Selection of binector for bit 0 of control word 1 i02: Selection of binector for bit 1 of control word 1 **...** i16: Selection of binector for bit 15 of control word 1 i17: Selection of binector for bit 16 of control word 2 i18: Selection of binector for bit 17 of control word 2 **...** i32: Selection of binector for bit 31 of control word 2 Settings: 0 = Fixed value 0 1 = Fixed value 1 2 = Fixed value 0 3 = Binector B003 4 = Binector B004 etc. PNU=4F8 Hex; Type=O2; Normalization: 1==1; Block diag.: [11.3.12.3]	0 to 200	Ind: 32 FS=0	1/UHABR 1/UHAB

PNU *: Ack. par.	OP1 parameter name Description	Value range [unit] Selection text	No. of indices Factory setting	Read Write (Access / State)
Setpoints to basic unit				**F1670**
Function:	The connectors to be used as setpoints are selected in H275 (setpoints 1 to 8) and output in display parameter d032 (setpoints 1 to 7). Setpoint 8 is a P-gain adaptation factor for the speed controller. The characteristic can be set by means of H276 and H279. Setpoint 8 is output in display parameter d033.			
H275 *****	**BU C_Setpoints** Selection of connector which must be injected as the appropriate setpoint i01: Select setpoint 1 (CB / TB word 2) i02: Select setpoint 2 (CB / TB word 3) i03: Select setpoint 3 (CB / TB word 5) **...** i08: Select setpoint 8 (CB / TB word 10) Settings: 0 = Fixed value 0 1 = Fixed value 100 % 2 = Fixed value 0 3 = Connector K003 4 = Connector K004 etc. PNU=4FB Hex; Type=O2; Normalization: 1==1; Block diag.: [10.4]	0 to 180	Ind: 8 FS=0	1/UHABR 1/UHAB
H276	**BU PGainAdapt_x1** P-gain adaptation characteristic for speed controller, threshold 1 PNU=4FC Hex; Type=O2; Normalization: 1==0.01 %; Block diag.: [10.4]	0.00 to 200.00 [%]	Ind: None FS=0.00	1/UHABR 1/UHABR
H277	**BU PGainAdapt_x2** P-gain adaptation characteristic for speed controller, threshold 2 PNU=4FD Hex; Type=O2; Normalization: 1==0.01 %; Block diag.: [10.5]	0.00 to 200.00 [%]	Ind: None FS=100.00	1/UHABR 1/UHABR
H278	**BU PGainAdapt_y1** P-gain adaptation characteristic for speed controller Minimum value of y (P-gain factor) when x ≤ x1 PNU=4FE Hex; Type=O2; Normalization: 1==0.01; Block diag.: [10.4]	0.00 to 19.99	Ind: None FS=1.00	1/UHABR 1/UHABR
H279	**BU PGainAdapt_y2** P-gain adaptation characteristic for speed controller Maximum value of y (P-gain factor) when x ≥ x2 PNU=4FF Hex; Type=O2; Normalization: 1==0.01; Block diag.: [10.4]	0.00 to 19.99	Ind: None FS=1.00	1/UHABR 1/UHABR

Dynamic reading and writing of basic unit parameters				**B150**
Notes:	Only the HIGH word is evaluated in double-word parameters Parameters in the basic unit are altered only in the RAM, but not in the EEPROM (refresh time approx. 250 ms) The dynamic parameter transfer function can be deactivated by setting H282 = 0			
H282 *****	**BU Param. No** Selection of number of parameter in basic unit to be read or written PNU=502 Hex; Type=O2; Normalization: 1==1; Block diag.: [15.3]	0 to 999	Ind: None FS=0	1/UHABR 1/UHAB
H283 *****	**BU Param. Index** Selection of index of parameter selected in H282 PNU=503 Hex; Type=O2; Normalization: 1==1; Block diag.: [15.4]	0 to 116	Ind: None FS=0	1/UHABR 1/UHAB

PNU *: Ack. par.	OP1 parameter name Description	Value range [unit] Selection text	No. of indices Factory setting	Read Write (Access / State)
H284 *	**BU C_Param.Write** Selection of connector value to be written to parameter selected in H282 and H283 Switchover between read and write 0 = Fixed value 0 1 = Fixed value 100 % 2 = Read selected parameter 3 = Connector K003 4 = Connector K004 etc. PNU=504 Hex; Type=O2; Normalization: 1==1; Block diag.: [15.2]	0 to 180	Ind: None FS=0	1/UHABR 1/UHAB

Data exchange via the USS interface (F160, F1770) See also Chapter 3.5

(F160 is the display of the data received via the USS interface - see display parameters)

Parameters for the USS interface				
H290 *	**Switch On USS** 0 = USS interface OFF 1 = USS interface ON PNU=50A Hex; Type=O2; Normalization: 1==1; Block diag.: [16.1]	0 to 1 USS OFF USS ON	Ind: None FS=0	1/UHABR 1/UHAB
H291 *	**USS MonitTime_s** (message monitoring time) 0.000 = No time monitoring of messages In the event of failure of the USS interface, the drive continues to operate with the old setpoints and control commands 0.001 ... 65.000 = Time which may elapse between the receipt of two error-free messages addressed to the unit before the time monitor responds. When the time monitor responds, binector B197 is set to the log. "1" state. A log. "1" pulse, which is 1s long, is triggered on binector B198. <u>Triggering of fault messages:</u> The circuit suggestion on sheet 16 of the block diagram shows the monitoring function connected such that it activates fault F117 in the basic unit. With a setting of H297=197 (= factory setting), binector B197 - and thus continuous log. "1" in the event of a fault - is applied to the fault trigger in the basic unit (F117). With a setting of H297=198, binector B198 is connected to the fault trigger in the basic unit (F117). When the monitor responds, therefore, the fault-trigger signal is set to "1" for only 1 s. This setting ensures that the basic unit can continue operation in "manual mode" after appropriate acknowledgement of the fault even if the fault message remains active continuously. Note: The message monitoring function is active - from receipt of the first error-free message after connection of the electronics power - from receipt of the first error-free message after the message monitor has responded (owing to timeout) PNU=50B Hex; Type=O2; Normalization: 1==0.001s; Block diag.: [16.1]	0.000 to 65.000 [s]	Ind: None FS=0.000	1/UHABR 1/UHAB
H292 *	**USS SlaveAddress** Address via which the board can be addressed in USS bus mode. PNU=50C Hex; Type=O2; Normalization: 1==1; Block diag.: [16.1]	0 to 31	Ind: None FS=0	1/UHABR 1/UHAB

PNU *: Ack. par.	OP1 parameter name Description	Value range [unit] Selection text	No. of indices Factory setting	Read Write (Access / State)
H293 *	**USS Baud Rate** 1 = 300 baud 2 = 600 baud 3 = 1200 baud 4 = 2400 baud 5 = 4800 baud 6 = 9600 baud 7 = 19200 baud 8 = 38400 baud 9 = 57600 baud 10 = 76800 baud 11 = 93750 baud 12 = 115200 baud 13 = 187500 baud PNU=50D Hex; Type=O2; Normalization: 1==1; Block diag.: [16.1]	1 to 13	Ind: None FS=6	1/UHABR 1/UHAB
H294 *	**USS ProcDataDisp** 0 = No process data are expected or transmitted in the USS protocol 1 to 10 = Number of process data words in USS protocol (receive and transmit data words are equal in length) PNU=50E Hex; Type=O2; Normalization: 1==1; Block diag.: [16.1]	0 to 10 0 Proc.Dat. 1 Proc.Dat. **...** 10 ProcDat.	Ind: None FS=2	1/UHABR 1/UHAB
H295 *	**USS ParamDatDisp** Number of words (16 bits) of PKW section in message net data block. 0 = No PKW share in message 3. 4 = PKW share is 3 (PKE, ind, PWE), 4 words long 127 = Variable PKW length for transmission of parameter description and texts. PNU=50F Hex; Type=O2; Normalization: 1==1; Block diag.: [16.1]	0 to 127	Ind: None FS=127	1/UHABR 1/UHAB

Transmit data				**F1770**
H296 *	**USS C_TransmData** Selection of connectors to be transferred as transmit data via the USS interface to the USS master i01: Selection for word 1 i02: Selection for word 2 **...** i10: Selection for word 10 Settings: 0 = Fixed value 0 1 = Fixed value 100 % 2 = Fixed value 0 3 = Connector K003 4 = Connector K004 etc. PNU=510 Hex; Type=O2; Normalization: 1==1; Block diag.: [16.5]	0 to 180	Ind: 10 FS=0	1/UHABR 1/UHAB

PNU *: Ack. par.	OP1 parameter name Description	Value range [unit] Selection text	No. of indices Factory setting	Read Write (Access / State)
H297 *	**F117 B_FaultTrig** Selection of binector which triggers the fault message in log. "1" state 0 = 0 (no fault message) 1 = 1 (continuous fault message) 2 = 0 (no fault message) 3 = Binector B003 4 = Binector B004 etc. See also description for parameter H291 (fault-message triggering) PNU=511 Hex; Type=O2; Normalization: 1==1; Block diag.: [16.5]	0 to 200	Ind: None FS=197	1/UHABR 1/UHAB

Data exchange via the peer-to-peer connection (F150, F1760) See also Chapter 3.6

(F150 = Display of data received via the peer-to-peer connection - see display parameters)

Parameters for COM BOARD				
H300	**Switch On Peer** 0 = Peer OFF 1 = Peer ON 2 = For factory test purposes PNU=514 Hex; Type=O2; Normalization: 1==1; Block diag.: [17.1]	0 to 2 Peer OFF Peer ON Factory	Ind: None FS=0	1/UHABR 1/UHABR
H301 *	**Peer MonitTime_s** (message monitoring time) 0.000 = No time monitoring of messages 0.001 ... 65.000 = Time which may elapse between the receipt of two error-free messages addressed to the unit before the time monitor responds. When the time monitor responds, binector B199 is set to the log. "1" state. A log. "1" pulse, which is 1s longer, is triggered on binector B200. <u>Triggering of fault messages:</u> The circuit suggestion on sheet 17 of the block diagram shows the monitoring function connected such that it activates fault F118 in the basic unit. With a setting of H305 = 199 (= factory setting), binector B199 - and thus continuous log. "1" in the event of a fault - is applied to the fault trigger in the basic unit (F118). With a setting of H305=200, binector B200 is connected to the fault trigger in the basic unit (F118). When the monitor responds, therefore, the fault-trigger signal is set to "1" for only 1 s. This setting ensures that the basic unit can continue operation in "manual mode" after appropriate acknowledgement of the fault even if the fault message remains active continuously. Note: The message monitoring function is active - from receipt of the first error-free message after connection of the electronics power - from receipt of the first error-free message after the message monitor has responded (owing to timeout) PNU=515 Hex; Type=O2; Normalization: 1==0.001s; Block diag.: [17.1]	0.000 to 65.000 [s]	Ind: None FS=0.000	1/UHABR 1/UHAB

PNU *: Ack. par.	OP1 parameter name Description	Value range [unit] Selection text	No. of indices Factory setting	Read Write (Access / State)
H302 *	**Peer Baud Rate** 1 = 300 baud 2 = 600 baud 3 = 1200 baud 4 = 2400 baud 5 = 4800 baud 6 = 9600 baud 7 = 19200 baud 8 = 38400 baud 9 = 57600 baud 10 = 76800 baud 11 = 93750 baud 12 = 115200 baud 13 = 187500 baud PNU=516 Hex; Type=O2; Normalization: 1==1; Block diag.: [17.1]	1 to 13	Ind: None FS=13	1/UHABR 1/UHAB
H303 *	**Peer MessLength** Selection of message length PNU=517 Hex; Type=O2; Normalization: 1==1; Block diag.: [17.1]	1 to 5	Ind: None FS=1 (1/UHABR)	1/UHABR 1/UHAB

Transmit data				**F1760**
H304 *	**Peer C_TransmData** Selection of connectors to be transferred as transmit data via the peer-to-peer connection i01: Selection for word 1 i02: Selection for word 2 **...** i05: Selection for word 5 Settings: 0 = Fixed value 0 1 = Fixed value 100 % 2 = Fixed value 0 3 = Connector K003 4 = Connector K004 etc. PNU=518 Hex; Type=O2; Normalization: 1==1; Block diag.: [17.5]	0 to 180	Ind: 5 FS=0	1/UHABR 1/UHAB

H305 *	**F118 B_FaultTrig** Selection of binector which triggers the fault message in log. "1" state 0 = 0 (no fault message) 1 = 1 (continuous fault message) 2 = 0 (no fault message) 3 = Binector B003 4 = Binector B004 etc. See also description for parameter H301 (fault-message triggering) PNU=519 Hex; Type=O2; Normalization: 1==1; Block diag.: [17.5]	0 to 200	Ind: None FS=199	1/UHABR 1/UHAB

PNU *: Ack. par.	OP1 parameter name Description	Value range [unit] Selection text	No. of indices Factory setting	Read Write (Access / State)

Process data exchange with the COM BOARD (CBx or SCBx) (F190, F1680)

See also Chapter 3.7

(F190 = Display of data received via the COM BOARD - see display parameters)

Parameters for COM BOARD Other settings: COM BOARD configuration in P696 to P705 Slave address P918				
H310 *****	**CB/SCB MonTime_s** (message monitoring time) 0.000 = No time monitoring of messages 0.001 ... 65.000 = Time which may elapse between the receipt of two error-free messages addressed to the unit before the time monitor responds. When the time monitor responds, binector B195 is set to the log. "1" state. A log. "1" pulse, which is 1s longer, is triggered on binector B196. <u>Triggering of fault messages:</u> The circuit suggestion on sheet 18 of the block diagram shows the monitoring function connected such that it activates fault F116 in the basic unit. With a setting of H312=195 (= factory setting), binector B195 - and thus continuous log. "1" in the event of a fault - is applied to the fault trigger in the basic unit (F116). With a setting of H312=196, binector B196 is connected to the fault trigger in the basic unit (F116). When the monitor responds, therefore, the fault-trigger signal is set to "1" for only 1 s. This setting ensures that the basic unit can continue operation in "manual mode" after appropriate acknowledgement of the fault even if the fault message remains active continuously. Note: The message monitoring function is active - from receipt of the first error-free message after connection of the electronics power - from receipt of the first error-free message after the message monitor has responded (owing to timeout) PNU=51E Hex; Type=O2; Normalization: 1==0.001s; Block diag.: [18.1]	0.000 to 65.000 [s]	Ind: None FS=0.000	1/UHABR 1/UHAB

Transmit data				**F1680**
H311 *****	**CB/SCB C_TrnsDat** Selection of connectors to be transferred as transmit data via the COM BOARD i01: Selection for word 1 i02: Selection for word 2 **...** i10: Selection for word 10 Settings: 0 = Fixed value 0 1 = Fixed value 100 % 2 = Fixed value 0 3 = Connector K003 4 = Connector K004 etc. PNU=51F Hex; Type=O2; Normalization: 1==1; Block diag.: [18.5]	0 to 180	Ind: 10 FS=0	1/UHABR 1/UHAB

PNU *: Ack. par.	OP1 parameter name Description	Value range [unit] Selection text	No. of indices Factory setting	Read Write (Access / State)
H312 *	**F116 B_FaultTrig** Selection of binector which triggers the fault message in log. "1" state 0 = 0 (no fault message) 1 = 1 (continuous fault message) 2 = 0 (no fault message) 3 = Binector B003 4 = Binector B004 etc. See also description for parameter H310 (fault-message triggering) PNU=520 Hex; Type=O2; Normalization: 1==1; Block diag.: [18.5]	0 to 200	Ind: None FS=195	1/UHABR 1/UHAB

Connector/binector converters (F410 to F430)

H320 *	**Con>Bin C_Select** Selection of connectors to be converted to binectors i01: 1st connector is applied to B064 (bit 0) to B079 (bit15) i02: 2nd connector is applied to B080 (bit 0) to B095 (bit15) i03: 3rd connector is applied to B096 (bit 0) to B111 (bit15) Settings: 0 = Fixed value 0 1 = Fixed value 100 % 2 = Fixed value 0 3 = Connector K003 4 = Connector K004 etc. PNU=528 Hex; Type=O2; Normalization: 1==1; Block diag.: [19.1]	0 to 180	Ind: 3 FS=0	1/UHABR 1/UHAB

Binector/connector converters (F1630 to F1650)

Binector/connector converter 1				**F1630**
Function: The binectors selected via the control word (indices 1 to 16) are applied to connector **K072**				
H324 *	**Bin>Con1 B-Selec** Selection of binectors to be converted to a connector i01: 1st binector is applied to the connector as bit 0 i02: 2nd binector is applied to the connector as bit 1 **...** i16: 16th binector is applied to the connector as bit 15 Settings: 0 = Fixed value 0 1 = Fixed value 1 2 = Fixed value 0 3 = Binector B003 4 = Binector B004 etc. PNU=52C Hex; Type=O2; Normalization: 1==1; Block diag.: [20.1]	0 to 200	Ind: 16 FS=0	1/UHABR 1/UHAB

Binector/connector converter 2				**F1640**
Function: The binectors selected via the control word (indices 1 to 16) are applied to connector **K073**				
H325 *	**Bin>Con2 B-Selec** as for H324 PNU=52D Hex; Type=O2; Normalization: 1==1; Block diag.: [20.5]	0 to 200	Ind: 16 FS=0	1/UHABR 1/UHAB

PNU *: Ack. par.	OP1 parameter name Description	Value range [unit] Selection text	No. of indices Factory setting	Read Write (Access / State)
Binector/connector converter 3				**F1650**
Function: The binectors selected via the control word (indices 1 to 16) are applied to connector **K074**				
H326 *****	**Bin>Con3 B-Selec** as for H324 PNU=52E Hex; Type=O2; Normalization: 1==1; Block diag.: [20.1]	0 to 200	Ind: 16 FS=0	1/UHABR 1/UHAB

Technology controller (F1240) See also Chapter 3.12

Actual value				
Note: Four different datasets for parameters H331 to H333 can be selected by means of the parameter set switchover function				
H330 *****	**TeCntr C_ActVal** Selection of connectors to be injected as additive actual values 0 = Fixed value 0 1 = Fixed value 100% 2 = Fixed value 0 3 = Connector K003 4 = Connector K004 etc. PNU=532 Hex; Type=02; Normalization: 1==1; Block diag.: [21.1]	0 to 180	Ind: 4 FS=0	1/UHABR 1/UHAB
H331	**TeCntr ActFilt_s** Setting of filter time for technology controller actual value PNU=533 Hex; Type=02; Normalization: 1==0.01 s; Block diag.: [21.2]	0.00 to 600.00 [s]	Ind: 4 FS=0.00	1/UHABR 1/UHABR
H332 *****	**TeCntr R-Time_s** Setting of rate time for technology controller actual value (D component) 0.000 = D component inactive PNU=534 Hex; Type=02; Normalization: 1==0.001s; Block diag.: [21.4]	0.000 to 30.000 [s]	Ind: 4 FS=0.000	1/UHABR 1/UHAB
H333	**TeCntr R-T*1000** Selection of rate time factor 0 Parameter H332 is multiplied by a factor of 1 1 Parameter H332 is multiplied by a factor of 1000 PNU=535 Hex; Type= O2; Normalization: 1==1; Block diag.: [21.4]	0 to 1 Value∗1 Value∗1000	Ind: 4 FS=0	1/UHABR 1/UHABR

Setpoint				
Note: Four different datasets for parameters H335 to H337 can be selected by means of the parameter set switchover function				
H334 *****	**TeCntr C_Setpnt** Selection of connectors to be injected as additive setpoints 0 = Fixed value 0 1 = Fixed value 100% 2 = Fixed value 0 3 = Connector K003 4 = Connector K004 etc. PNU=536 Hex; Type=02; Normalization: 1==1; Block diag.: [21.1]	0 to 180	Ind: 4 FS=0	1/UHABR 1/UHAB
H335 *****	**TeCntr C SuppSet** Setting of supplementary setpoint for technology controller to be applied via a binector PNU=537 Hex; Type=I2; Normalization: 1==0.01 %; Block diag.: [21.1]	-200.00 to 199.99 [%]	Ind: 4 FS=0.00	1/UHABR 1/UHAB

PNU *: Ack. par.	OP1 parameter name Description	Value range [unit] Selection text	No. of indices Factory setting	Read Write (Access / State)
H336 *	**TeCntr B_SuppSet** Selection of binector to control application of supplementary setpoint 0 = Fixed value 0 (supplementary setpoint not applied) 1 = Fixed value 1 (supplementary setpoint continuously applied) 2 = Fixed value 0 (supplementary setpoint not applied) 3 = Binector B003 4 = Binector B004 etc. PNU=538 Hex; Type=02; Normalization: 1==1; Block diag.: [21.1]	0 to 200	Ind: None FS=0	1/UHABR 1/UHAB
H337	**TeCntr SetFilt_s** Setting of filter time for technology controller setpoint PNU=539 Hex; Type=02; Normalization: 1==0.01 s; Block diag.: [21.2]	0.00 to 600.00 [s]	Ind: 4 FS=0.00	1/UHABR 1/UHABR

Control parameters Note: Four different datasets for parameters H338 and H340 to H345 can be selected by means of the parameter set switchover function				
H338	**TeCntr PGain** Setting of P-gain of technology controller PNU=53A Hex; Type=02; Normalization: 1==0.01; Block diag.: [21.5]	0.10 to 200.00	Ind: 4 FS=3.00	1/UHABR 1/UHABR
H339 *	**TeCntr C_PGnAdpt** Selection of connector to be applied as the input quantity (P-gain factor) for the purpose of P-gain adaptation 0 = Fixed value 0 1 = Fixed value 100 % 2 = Fixed value 0 3 = Connector K003 4 = Connector K004 etc. PNU=53B Hex; Type=O2; Normalization: 1==1; Block diag.: [21.1]	0 to 180	Ind: None FS=0	1/UHABR 1/UHAB
H340	**TeCntr PGadpt_x1** P-gain adaptation characteristic for technology controller - threshold 1 PNU=53C Hex; Type=O2; Normalization: 1==0.01 %; Block diag.: [21.2]	0.00 to 200.00 [%]	Ind: 4 FS=0.00	1/UHABR 1/UHABR
H341	**TeCntr PGadpt_x2** P-gain adaptation characteristic for technology controller - threshold 2 PNU=53D Hex; Type=O2; Normalization: 1==0.01 %; Block diag.: [21.2]	0.00 to 200.00 [%]	Ind: 4 FS=100.00	1/UHABR 1/UHABR
H342	**TeCntr PGadpt_y1** P-gain adaptation characteristic for technology controller Minimum value of y (P-gain factor) when x ≤ x1 PNU=53E Hex; Type=O2; Normalization: 1==0.01; Block diag.: [21.1]	0.10 to 30.00	Ind: 4 FS=1.00	1/UHABR 1/UHABR
H343	**TeCntr PGadpt_y2** P-gain adaptation characteristic for technology controller Maximum value of y (P-gain factor) when x ≥ x2 PNU=53F Hex; Type=O2; Normalization: 1==0.01; Block diag.: [21.1]	0.10 to 30.00	Ind: 4 FS=1.00	1/UHABR 1/UHABR
H344	**TeCntr ResetTime** Setting of reset time for technology controller The integral component of the technology controller can be deactivated with H351xxx0 PNU=540 Hex; Type=02; Normalization: 1==0.001s; Block diag.: [21.6]	0 to 60.000 [s]	Ind: 4 FS=3.000	1/UHABR 1/UHABR
H345	**TeCntr R-T∗1000** Selection of factor for reset time 0 Parameter H344 is multiplied by a factor of 1 1 Parameter H344 is multiplied by a factor of 1000 PNU=541 Hex; Type= O2; Normalization: 1==1; Block diag.: [21.6]	0 to 1 Value ∗1 Value ∗1000	Ind: 4 FS=0	1/UHABR 1/UHABR

PNU *: Ack. par.	OP1 parameter name Description	Value range [unit] Selection text	No. of indices Factory setting	Read Write (Access / State)
Droop				
Function:	A parameterizable feedback (acts on summation point of setpoint and actual value) is switched in parallel to the I and P components of the technology controller. This feedback can be enabled and disabled via control word H346 (can also be disabled by H347 = 0).			
Note:	Four different datasets for parameters H347 to H349 can be selected by means of the parameter set switchover function			
H346 *****	**TeCntr B_Droop** Selection of binector to control injection of droop 0 = Fixed value 0 (droop not effective) 1 = Fixed value 1 (droop continuously effective) 2 = Fixed value 0 (droop not effective) 3 = Binector B003 4 = Binector B004 etc. PNU=542 Hex; Type=O2; Normalization: 1==1; Block diag.: [21.4]	0 to 200	Ind: None FS=0	1/UHABR 1/UHAB
H347	**TeCntr Droop_%** Setting of droop for technology controller A 10% droop setting results in a 10% decrease in the setpoint with 100% at the controller output ("softening" of control) PNU=543 Hex; Type=02; Normalization: 1==0.1 %; Block diag.: [21.5]	0.0 to 60.0 [%]	Ind: 4 FS=0.0	1/UHABR 1/UHABR
H348	**TeCntr Droop L+** Positive limit for technology controller droop PNU=544 Hex; Type=O2; Normalization: 1==0.01 %; Block diag.: [21.5]	0.00 to 199.99 [%]	Ind: 4 FS=100.00	1/UHABR 1/UHABR
H349	**TeCntr Droop L-** Negative limit for technology controller droop PNU=545 Hex; Type=I2; Normalization: 1==0.01 %; Block diag.: [21.5]	-199.99 to 0.00 [%]	Ind: 4 FS=-100.00	1/UHABR 1/UHABR

Control bits				
Note:	Four different datasets for parameter H351 can be selected by means of the parameter set switchover function			
H350 *****	**TeCntr B_Enable** Selection of binector which is to control enabling of the technology controller 0 = Fixed value 0 (controller not enabled) 1 = Fixed value 1 (controller enabled) 2 = Fixed value 0 (controller not enabled) 3 = Binector B003 4 = Binector B004 etc. PNU=546 Hex; Type=O2; Normalization: 1==1; Block diag.: [21.4]	0 to 200	Ind: None FS=0	1/UHABR 1/UHAB
H351 *****	**TeCntr CntrTyp** Control word for technology controller xxx0 = Set controller I component to zero (i.e. pure P-action controller) xxx1 = I component of controller active xx0x = Set controller P component to zero (i.e. pure I-action controller) xx1x = P component of controller active x0xx = PI controller (D component effective only in actual value channel) x1xx = PID controller (D component effective for control deviation) 0xxx = Actual value is injected according to sign 1xxx = Actual value is injected in inverted form PNU=547 Hex; Type=L2; Normalization: 1==1 Hex; Block diag.: [21.6]	0000 to 1111	Ind: 4 FS=0011	1/UHABR 1/UHAB

PNU *: Ack. par.	OP1 parameter name Description	Value range [unit] Selection text	No. of indices Factory setting	Read Write (Access / State)
Set I component Function: When the state of the binector selected in H353 switches from log. "0" to log. "1", the I component of the technology controller is set to the value of the connector selected in H352. This function allows, for example, controller enabling and setting of the I component to be controlled by the same signal (binector).				
H352 *****	**TeCntr C_I-CSett** Selection of connector to be injected as the setting value for the controller I component 0 = Fixed value 0 1 = Fixed value 100 % 2 = Fixed value 0 3 = Connector K003 4 = Connector K004 etc. PNU=548 Hex; Type=O2; Normalization: 1==1; Block diag.: [21.4]	0 to 180	Ind: None FS=0	1/UHABR 1/UHAB
H353 *****	**TeCntr B_I-CSett** Selection of binector to control setting of I component 0 = Fixed value 0 (I component is not set) 1 = Fixed value 1 (I component is set) 2 = Fixed value 0 (I component is not set) 3 = Binector B003 4 = Binector B004 etc. PNU=549 Hex; Type=O2; Normalization: 1==1; Block diag.: [21.4]	0 to 200	Ind: None FS=0	1/UHABR 1/UHAB

Output, limitation Note: Four different datasets for parameter H355, H357 and H359 can be selected by means of the parameter set switchover function				
H354 *****	**TeCntr C_Outp L+** Number of connector which is taken to the **variable positive limit** for the technology controller after multiplication with parameter H355 0 = Fixed value 0 1 = Fixed value 100 % 2 = Fixed value 100 % 3 = Connector K003 4 = Connector K004 etc. **Note:** If the selected connector contains a negative value, the value at the output of this limitation stage will be a negative maximum value. PNU=54A Hex; Type=O2; Normalization: 1==1; Block diag.: [21.7]	0 to 180	Ind: None FS=1	1/UHABR 1/UHAB
H355	**TeCntr Output L+** Positive limit for the technology controller output PNU=54B Hex; Type=O2; Normalization: 1==0.1 %; Block diag.: [21.7]	0.0 to 199.9 [%]	Ind: 4 FS=100.0	1/UHABR 1/UHABR

PNU *: Ack. par.	OP1 parameter name Description	Value range [unit] Selection text	No. of indices Factory setting	Read Write (Access / State)
H356 *	**TeCntr C_Outp L-** Number of connector which is taken to the **variable negative limit** for the technology controller output after multiplication with parameter H357 0 = Fixed value 0 1 = Fixed value -100 % 2 = Fixed value 0 3 = Connector K003 4 = Connector K004 etc. **Note:** If the selected connector contains a positive value, the value at the output of this limitation stage will be a positive minimum value. **Note:** Connector K086 contains the positive limitation value with inverted sign produced by H354 and H355. It is therefore possible to set the negative limitation symmetrically to the positive limitation by setting H356=86 and H357=100.0. PNU=54C Hex; Type=O2; Normalization: 1==1; Block diag.: [21.7]	0 to 180	Ind: None FS=86	1/UHABR 1/UHAB
H357	**TeCntr Output L-** Negative limit for the output of the technology controller PNU=54D Hex; Type=02; Normalization: 1==0.1 %; Block diag.: [21.7]	0.0 to 199.9 [%]	Ind: 4 FS=100.0	1/UHABR 1/UHABR
H358 *	**TeCntr C_OutpScl** Number of connector which weights the output of the technology controller after multiplication with parameter H359 0 = Fixed value 0 1 = Fixed value 100 % 2 = Fixed value 100 % 3 = Connector K003 4 = Connector K004 etc. PNU=54E Hex; Type=O2; Normalization: 1==1; Block diag.: [21.8]	0 to 180	Ind: None FS=1	1/UHABR 1/UHAB
H359	**TeCntr OutptScal** Weighting factor for the technology controller output PNU=54F Hex; Type=I2; Normalization: 1==0.1 %; Block diag.: [21.8]	-100.0 to 100.0 [%]	Ind: 4 FS=100.0	1/UHABR 1/UHABR

Comfort ramp-function generator (F1010) See also Chapter 3.13

Input				
H360 *	**CORFG C_Input** Selection of connector to be injected as the **input quantity** for the ramp-function generator 0 = Fixed value 0 1 = Fixed value 100 % 2 = Fixed value 0 3 = Connector K003 4 = Connector K004 etc. PNU=550 Hex; Type= O2; Normalization: 1==1; Block diag.: [22.1]	0 to 180	Ind: None FS=0	1/UHABR 1/UHAB
H361 *	**CORFG B_Stop** Selection of binector to control "**Stop ramp-function generator**" 0 = Fixed value 0 1 = Fixed value 1 (ramp-function generator stopped) 2 = Fixed value 0 3 = Binector B003 4 = Binector B004 etc. PNU=551 Hex; Type=O2; Normalization: 1==1; Block diag.: [22.1]	0 to 200	Ind: None FS=0	1/UHABR 1/UHAB

PNU *: Ack. par.	OP1 parameter name Description	Value range [unit] Selection text	No. of indices Factory setting	Read Write (Access / State)
H362 *	**CORFG B_Disable** Selection of binector which is control the "**Disable**" function (application of 0 at ramp-generator input and switchover to RFG setting 1) 0 = Fixed value 0 (no disabling) 1 = Fixed value 1 (disable) 2 = Fixed value 0 (no disabling) 3 = Binector B003 4 = Binector B004 etc. PNU=552 Hex; Type=O2; Normalization: 1==1; Block diag.: [22.1]	0 to 200	Ind: None FS=1	1/UHABR 1/UHAB

Set ramp-function generator Function: When the binector selected in H365 switches to the log. "1" state, the ramp-function generator output is set to the value of the connector selected in H364..				
H364 *	**CORFG C_SetVal.** Selection of connector to be injected as the **ramp-function generator setting value** 0 = Fixed value 0 1 = Fixed value 100 % 2 = Fixed value 0 3 = Connector K003 4 = Connector K004 etc. PNU=554 Hex; Type= O2; Normalization: 1==1; Block diag.: [22.1]	0 to 180	Ind: None FS=0	1/UHABR 1/UHAB
H365 *	**CORFG B_Set** Selection of binector which is to control "**Set ramp-function generator**" 0 = Fixed value 0 1 = Fixed value 1 (set ramp-function generator) 2 = Fixed value 0 3 = Binector B003 4 = Binector B004 etc. PNU=555 Hex; Type=O2; Normalization: 1==1; Block diag.: [22.1]	0 to 200	Ind: None FS=0	1/UHABR 1/UHAB

PNU *: Ack. par.	OP1 parameter name Description	Value range [unit] Selection text	No. of indices Factory setting	Read Write (Access / State)
Starting integrator				
The starting integrator can operate in two different modes: 1. "Starting integrator operation ON" = 0: The comfort ramp-function generator operates as a "normal" generator. The 3 generator settings are specified only via the binectors selected in H370 and H371. 2. "Starting integrator operation ON" = 1: In this mode, only generator settings 1 and 3 are active. A status controller determines which of the two settings is active. Ramp-function generator setting 1 (H372 - H375) is initially active after a "Ramp-function generator enable" command. As soon as the generator reaches the required setpoint for the first time, setting 3 (H381 to H384) is automatically activated. Note: If the "Starting integrator operation ON" signal is switched to "1" when the generator is enabled, then generator setting 3 is activated immediately. Application example:: A drive group of a production line must be accelerated from standstill up to the current line velocity via a ramp. The drive group concerned must then follow the line velocity without any delay, i.e. the ramp-function generator must bypass itself after it has ramped the drive up to the correct speed (H381, H382 = 0).			
H366 *	**CORFG B_StartInt** Selection of which binector is to control "**Starting integrator operation ON**" 0 = Fixed value 0 1 = Fixed value 1 2 = Fixed value 0 3 = Binector B003 4 = Binector B004 etc. PNU=556 Hex; Type=O2; Normalization: 1==1; Block diag.: [22.1]	0 to 200	Ind: None FS=0	1/UHABR 1/UHAB

Output dy/dt				
H367	**CORFG dydt Tdif** Setting of dt for the output of dy/dt at connector, i.e. the change in the output quantity (K096) within the time set in H367 is output at K095 Example: - The ramp-function generator is ramping up with a ramp time of H381=5s, i.e. a ramp-up operation of y=0% to y=100% takes 5s. - A time difference dt of 2 s is set in H367. - ⇒ A dy/dt of 40% appears at connector K093 because the dy within the set dt of 2s equals (2s/5s)*100%. PNU=557 Hex; Type=O2; Normalization: 1==0.01 s; Block diag.: [22.5]	0.01 to 300.00 [s]	Ind: None FS=0.01	1/UHABR 1/UHABR

Control bits				
H368 *	**CORFG B_Enable** Selection of binector which is to control "**Enable ramp-function generator**" 0 = Fixed value 0 1 = Fixed value 1 (ramp generator enabled) 2 = Fixed value 0 3 = Binector B003 4 = Binector B004 etc. PNU=558 Hex; Type=O2; Normalization: 1==1; Block diag.: [22.1]	0 to 200	Ind: None FS=0	1/UHABR 1/UHAB
H369	**CORFG 1=Tracking** 0 = No ramp-function generator tracking 1 = Ramp-function generator tracking active PNU=559 Hex; Type=O2; Normalization: 1==1; Block diag.: [22.4]	0 to 1	Ind: None FS=0	1/UHABR 1/UHABR

PNU *: Ack. par.	OP1 parameter name Description	Value range [unit] Selection text	No. of indices Factory setting	Read Write (Access / State)
H370 *	**CORFG B_Sttng_2** Selection of binector which is to control switchover to "**Ramp-function generator setting 2**". In the log. "1" state, ramp-function generator parameter set 2 (H377 - H380) is selected. This function has priority over the "Starting integrator" function (H366). 0 = Fixed value 0 1 = Fixed value 1 (setting 2 active) 2 = Fixed value 0 3 = Binector B003 4 = Binector B004 etc. PNU=55A Hex; Type=O2; Normalization: 1==1; Block diag.: [22.1]	0 to 200	Ind: None FS=0	1/UHABR 1/UHAB
H371 *	**CORFG B_Sttng_3** Selection of binector which is to control switchover to "**Ramp-function generator setting 3**". In the log. "1" state, ramp-function generator parameter set 3 (H381 - H384) is selected. This function has priority over the "Starting integrator" function (H366). 0 = Fixed value 0 1 = Fixed value 1 (setting 3 active) 2 = Fixed value 0 3 = Binector B003 4 = Binector B004 etc. PNU=55B Hex; Type=O2; Normalization: 1==1; Block diag.: [22.1]	0 to 200	Ind: None FS=0	1/UHABR 1/UHAB

Ramp-function generator parameter set 1				
H372	**CORFG RU-Time_1** (ramp-up time) PNU=55C Hex; Type=O2; Normalization: 1==0.01 s; Block diag.: [22.2]	0.00 to 650.00 [s]	Ind: None FS=0.00	1/UHABR 1/UHABR
H373	**CORFG RD-Time_1** (ramp-down time) PNU=55D Hex; Type=O2; Normalization: 1==0.01 s; Block diag.: [22.3]	0.00 to 650.00 [s]	Ind: None FS=0.00	1/UHABR 1/UHABR
H374	**CORFG LT-Round_1** (lower transition rounding) PNU=55E Hex; Type=O2; Normalization: 1==0.01 s; Block diag.: [22.4]	0.00 to 10.00 [s]	Ind: None FS=0.00	1/UHABR 1/UHABR
H375	**CORFG UT-Round_1** (upper transition rounding) PNU=55F Hex; Type=O2; Normalization: 1==0.01 s; Block diag.: [22.5]	0.00 to 10.00 [s]	Ind: None FS=0.00	1/UHABR 1/UHABR
H376 *	**CORFG C_TRreduc** Selection of connector which must be injected as the **reduction signal** for the **generator ramping times** i01 acts on the ramp-up and ramp-down times (H372, H373) i02 acts on lower and upper transition rounding (H374, H375) 0 = Fixed value 0 1 = Fixed value 100 % 2 = Fixed value 100 % 3 = Connector K003 4 = Connector K004 etc. PNU=560 Hex; Type= O2; Normalization: 1==1; Block diag.: [22.1]	0 to 180	Ind: 2 FS=1	1/UHABR 1/UHAB

Ramp-function generator parameter set 2				
H377	**CORFG RU-Time_2** (ramp-up time) PNU=561 Hex; Type=O2; Normalization: 1==0.01 s; Block diag.: [22.3]	0.00 to 650.00 [s]	Ind: None FS=0.00	1/UHABR 1/UHABR
H378	**CORFG RD-Time_2** (ramp-down time) PNU=562 Hex; Type=O2; Normalization: 1==0.01 s; Block diag.: [22.3]	0.00 to 650.00 [s]	Ind: None FS=0.00	1/UHABR 1/UHABR
H379	**CORFG LT-Round_2** (lower transition rounding) PNU=563 Hex; Type=O2; Normalization: 1==0.01 s; Block diag.: [22.5]	0.00 to 10.00 [s]	Ind: None FS=0.00	1/UHABR 1/UHABR

PNU *: Ack. par.	OP1 parameter name Description	Value range [unit] Selection text	No. of indices Factory setting	Read Write (Access / State)
H380	**CORFG UT-Round_2** (upper transition rounding) PNU=564 Hex; Type=O2; Normalization: 1==0.01 s; Block diag.: [22.5]	0.00 to 10.00 [s]	Ind: None FS=0.00	1/UHABR 1/UHABR

Ramp-function generator parameter set 3				
H381	**CORFG RU-Time_3** (ramp-up time) PNU=565 Hex; Type=O2; Normalization: 1==0.01 s; Block diag.: [22.3]	0.00 to 650.00 [s]	Ind: None FS=0.00	1/UHABR 1/UHABR
H382	**CORFG RD-Time_3** (ramp-down time) PNU=566 Hex; Type=O2; Normalization: 1==0.01 s; Block diag.: [22.3]	0.00 to 650.00 [s]	Ind: None FS=0.00	1/UHABR 1/UHABR
H383	**CORFG LT-Round_3** (lower transition rounding) PNU=567 Hex; Type=O2; Normalization: 1==0.01 s; Block diag.: [22.5]	0.00 to 10.00 [s]	Ind: None FS=0.00	1/UHABR 1/UHABR
H384	**CORFG UT-Round_3** (upper transition rounding) PNU=568 Hex; Type=O2; Normalization: 1==0.01 s; Block diag.: [22.5]	0.00 to 10.00 [s]	Ind: None FS=0.00	1/UHABR 1/UHABR

Limitation in ramp-function generator, output Note: The limitation value set in H385 is available at connector K101. By setting H386 = 101, this value can be applied as a positive limitation value in the ramp-function generator. The positive limitation value selected in H386 is available with inverted sign at connector K102. By setting H387 = 102, this value can be applied as a negative limitation value in the ramp-function generator (symmetrically to the positive limitation).				
H385	**CORFG IntLimit** (fixed limitation value) PNU=569 Hex; Type=O2; Normalization: 1==0.01 %; Block diag.: [22.7]	0.00 to 100.00 [%]	Ind: None FS=100.00	1/UHABR 1/UHABR
H386 *****	**CORFG C_Int L+** Selection of connector which must be injected as the **positive limitation value in the ramp-function generator** 0 = Fixed value 0 1 = Fixed value 100 % 2 = Fixed value 0 3 = Connector K003 4 = Connector K004 etc. PNU=56A Hex; Type= O2; Normalization: 1==1; Block diag.: [22.8]	0 to 180	Ind: None FS=101	1/UHABR 1/UHAB
H387 *****	**CORFG C_Int L-** Selection of connector which must be injected as the **negative limitation value in the ramp-function generator** 0 = Fixed value 0 1 = Fixed value -100 % 2 = Fixed value 0 3 = Connector K003 4 = Connector K004 etc. PNU=56B Hex; Type= O2; Normalization: 1==1; Block diag.: [22.8]	0 to 180	Ind: None FS=102	1/UHABR 1/UHAB

PNU *: Ack. par.	OP1 parameter name Description	Value range [unit] Selection text	No. of indices Factory setting	Read Write (Access / State)
Limitation after ramp-function generator output (setpoint limitation)				
Note:	The limitation values for both the positive and the negative setpoint limit can have a positive or negative sign. It is therefore possible, for example, to set the negative setpoint limit to a positive value or the positive setpoint limit to a negative value. Example: H391 = -10.00 / H392 = 2 (=200.00%) / H393 = -100.00 / H394 = 2 (=-200.00%) results in a limitation of the output value to values between -100.00 and -10.00 %			
H390 *****	**LimtRFG C_Input** Selection of connector which must be injected as the input for the **limitation after the ramp-function generator output** (setpoint limitation) i01: 0 = Fixed value 0 1 = Fixed value 100 % 2 = Ramp-function generator output 3 = Connector K003 4 = Connector K004 etc. i02 - i04: 0 = Fixed value 0 1 = Fixed value 100 % 2 = Fixed value 0 3 = Connector K003 4 = Connector K004 etc. PNU=56E Hex; Type= O2; Normalization: 1==1; Block diag.: [22.6]	0 to 180	Ind: 4 FS=2	1/UHABR 1/UHAB
H391	**LimtRFG LimitL+** **Positive** limitation after the ramp-function generator (positive setpoint limit) Note: If this parameter is set to a negative value, a negative maximum value will appear at the limitation stage output. Effective limitation = minimum of H391 and the value selected in H392. PNU=56F Hex; Type=I2; Normalization: 1==0.01 %; Block diag.: [22.7]	-200.00 to 199.99 [%]	Ind: None FS=100.00	1/UHABR 1/UHABR
H392 *****	**LimtRFG C_LmtL+** Selection of connector which must be applied to the **variable positive limitation after the ramp-function generator** (setpoint limitation). Note: If the selected connector has a negative value, a negative minimum value will appear at the limitation stage output. 0 = Fixed value 0 1 = Fixed value 100 % 2 = Fixed value 200 % 3 = Connector K003 4 = Connector K004 etc. PNU=570 Hex; Type= O2; Normalization: 1==1; Block diag.: [22.6]	0 to 180	Ind: 4 FS=2	1/UHABR 1/UHAB
H393	**LimtRFG LimitL-** **Negative** limitation after the ramp-function generator (negative setpoint limit) Note: If this parameter is set to a positive value, a positive minimum value will appear at the limitation stage output. Effective limitation = maximum of H393 and the value selected in H394. PNU=571 Hex; Type=I2; Normalization: 1==0.01 %; Block diag.: [22.7]	-200.00 to 199.99 [%]	Ind: None FS=-100.00	1/UHABR 1/UHABR

PNU *: Ack. par.	OP1 parameter name Description	Value range [unit] Selection text	No. of indices Factory setting	Read Write (Access / State)
H394 *	**LimtRFG C_LmtL-** Selection of connector which must be applied to the **variable negative limitation after the ramp-function generator** (setpoint limitation). Note: If the selected connector has a positive value, a positive minimum value will appear at the limitation stage output. 0 = Fixed value 0 1 = Fixed value –100 % 2 = Value as set in parameter H392 ∗ (–1) 3 = Connector K003 4 = Connector K004 etc. PNU=572 Hex; Type= O2; Normalization: 1==1; Block diag.: [22.6]	0 to 180	Ind: 4 FS=2	1/UHABR 1/UHAB

Motorized potentiometer (F670) See also Chapter 3.14

Note:	Four different datasets for parameters H400, H401, H402, H403, H404, H410, H411, 412, 413. and H414 can be selected by means of the parameter set switchover function			
H400 *	**MOP Op-Mode** Selection of operating mode for the motorized potentiometer xxx1 Motorized potentiometer mode: The ramp-function generator is operated by means of Raise/Lower commands. The automatic-mode setpoint is ignored. xxx2 Ramp-function generator mode: The ramp-function generator follows the automatic-mode setpoint. The Raise/Lower commands are ignored. xx0x No storage of output value: Output is set to 0 if status word 1 bit 2 = 0 (not "Run" mode) and when supply voltage is switched on. xx10 Non-volatile storage of output value: The output value remains stored in all operational states and during disconnection or failure of the power supply. On supply recovery, the last value stored is output again. x0xx The motorized potentiometer ramp-function generator is bypassed in automatic mode (H402 and H403 = 0, i.e. the ramp-function generator output follows the automatic-mode setpoint instantaneously). x1xx Motorized potentiometer ramp-function generator is effective in manual and automatic modes. 0xxx Operating range of motorized potentiometer via RAISE/LOWER = 0 to 100% (control of clockwise/counter-clockwise switchover selected in H407) 1xxx Operating range of motorized potentiometer via RAISE/LOWER = -100% to +100% (clockwise/counter-clockwise switchover is inactive) PNU=578 Hex; Type= L2; Normalization: 1==1 Hex; Block diag.: [23.4]	0001 to 1112	Ind: 4 FS=0101	1/UHABR 1/UHAB
H401 *	**MOP AutoSetpoint** Selection of connector which must be applied to the ramp-function generator as the **automatic-mode setpoint** 0 = Fixed value 0 1 = Fixed value 100 % 2 = Fixed value 0 3 = Connector K003 4 = Connector K004 etc. PNU=579 Hex; Type= O2; Normalization: 1==1; Block diag.: [23.1]	0 to 180	Ind: 4 FS=0	1/UHABR 1/UHAB

PNU *: Ack. par.	OP1 parameter name Description	Value range [unit] Selection text	No. of indices Factory setting	Read Write (Access / State)
H402	**MOP RampUpTime_s** Ramp-up time for the motorized potentiometer Note: Set time acts in [s] when H404=0 or in [min] when H404=1 PNU=57A Hex; Type=O2; Normalization: 1==0.01 s; Block diag.: [23.5]	0.01 to 300.00 [s]	Ind: 4 FS=10.00	1/UHABR 1/UHABR
H403	**MOP RampDown_s** Ramp-down time for the motorized potentiometer Note: Set time acts in [s] when H404=0 or in [min] when H404=1 PNU=57B Hex; Type=O2; Normalization: 1==0.01 s; Block diag.: [23.6]	0.01 to 300.00 [s]	Ind: 4 FS=10.00	1/UHABR 1/UHABR
H404 *	**MOP TUp/Down∗60** Selection of **extension factor** for the motorized potentiometer 0 Parameters H402, H403, H412 are multiplied by a factor of 1 1 Parameters H402, H403, H412 are multiplied by a factor of 60, i.e. the values set there act in [min] instead of in [s] PNU=57C Hex; Type= O2; Normalization: 1==1; Block diag.: [23.8]	0 to 1 Value ∗1 Value ∗60	Ind: 4 FS=0	1/UHABR 1/UHAB
H405 *	**MOP B_RaiseComm** Selection of binector to control "**RAISE setpoint**". 0 = Fixed value 0 1 = Fixed value 1 (RAISE) 2 = Fixed value 0 3 = Binector B003 4 = Binector B004 etc. PNU=57D Hex; Type=O2; Normalization: 1==1; Block diag.: [23.1]	0 to 200	Ind: None FS=0	1/UHABR 1/UHAB
H406 *	**MOP B_LowerComm** Selection of binector to control "**LOWER setpoint**". 0 = Fixed value 0 1 = Fixed value 1 (LOWER) 2 = Fixed value 0 3 = Binector B003 4 = Binector B004 etc. PNU=57E Hex; Type=O2; Normalization: 1==1; Block diag.: [23.2]	0 to 200	Ind: None FS=0	1/UHABR 1/UHAB
H407 *	**MOP B_CW/CCW** Selection of binector to control "**Clockwise/Counter-clockwise switchover**". 0 = Fixed value 0 (clockwise) 1 = Fixed value 1 (counter-clockwise) 2 = Fixed value 0 (clockwise) 3 = Binector B003 4 = Binector B004 etc. PNU=57F Hex; Type=O2; Normalization: 1==1; Block diag.: [23.3]	0 to 200	Ind: None FS=0	1/UHABR 1/UHAB
H408 *	**MOP B_Man/Auto** Selection of binector to control "**Manual/Automatic mode switchover**". 0 = Fixed value 0 (manual) 1 = Fixed value 1 (automatic) 2 = Fixed value 0 (manual) 3 = Binector B003 4 = Binector B004 etc. PNU=580 Hex; Type=O2; Normalization: 1==1; Block diag.: [23.4]	0 to 200	Ind: None FS=0	1/UHABR 1/UHAB

PNU *: Ack. par.	OP1 parameter name Description	Value range [unit] Selection text	No. of indices Factory setting	Read Write (Access / State)
H409 *	**MOP B_Set** Selection of binector to control "**Set motorized potentiometer**". 0 = Fixed value 0 1 = Fixed value 1 (set motorized potentiometer) 2 = Fixed value 0 3 = Binector B003 4 = Binector B004 etc. PNU=581 Hex; Type=O2; Normalization: 1==1; Block diag.: [23.5]	0 to 200	Ind: None FS=0	1/UHABR 1/UHAB
H410 *	**MOP C_SettingVal** Selection of connector which must be injected as the **motorized potentiometer setting value** 0 = Fixed value 0 1 = Fixed value 100 % 2 = Fixed value 0 3 = Connector K003 4 = Connector K004 etc. PNU=582 Hex; Type= O2; Normalization: 1==1; Block diag.: [23.5]	0 to 180	Ind: 4 FS=0	1/UHABR 1/UHAB
H411	**MOP WghtFactor** Setting of weighting factor for motorized potentiometer PNU=583 Hex; Type= I2; Normalization: 1==1 %; Block diag.: [23.7]	-100 to +100 [%]	Ind: 4 FS=100	1/UHABR 1/UHABR
H412	**MOP dydt TimeDif** Setting of dt for the output of dy/dt at connector, i.e. the change in the output quantity (K158) within the time set in H412 and multiplied by the time factor in H404 (set time acts in [s] when H404 =0 or in [min] when H404 =1) is output at K160 Example: - The ramp-function generator is ramping up with a ramp time of H402=5s, i.e. a ramp-up operation of y=0% to y=100% takes 5s. - A time difference dt of 2 s is set in H412. - ⇒ A dy/dt of 40% appears at connector K160 because the dy within the set dt of 2s equals (2s/5s)*100%. PNU=584 Hex; Type=O2; Normalization: 1==0.01 s; Block diag.: [23.7]	0.01 to 300.00 [s]	Ind: 4 FS=10.00	1/UHABR 1/UHABR
H413	**MOP Limit +** (starting with software version 1.1) Positive limit for the motorized potentiometer PNU=585 Hex; Typ=I2; Normalization: 1==0,01 %; Block diag.: [23.6]	-100.00 to +100.00 [%]	Ind: 4 FS=100,00	1/UHABR 1/UHABR
H414	**MOP Limit -** (starting with software version 1.1) Negative limit for the motorized potentiometer PNU=586 Hex; Typ=I2; Normalization: 1==0,01 %; Block diag.: [23.6]	-100.00 to +100.00 [%]	Ind: 4 FS=-100,00	1/UHABR 1/UHABR

Wobble generator (F1020) See also Chapter 3.15

Control				
H418 *	**Wobb C_UnmodSetp** Selection of connector to be injected as the "**Unmodulated setpoint (IN)"** 0 = Fixed value 0 1 = Fixed value 100 % 2 = Fixed value 0 3 = Connector K003 4 = Connector K004 etc. PNU=58A Hex; Type= O2; Normalization: 1==1; Block diag.: [24.1]	0 to 180	Ind: None FS=0	1/UHABR 1/UHAB

PNU *: Ack. par.	OP1 parameter name Description	Value range [unit] Selection text	No. of indices Factory setting	Read Write (Access / State)
H419 *	**Wobb B_SyncInput** Selection of binector to be injected as the "**Synchronizing signal from master**" 0 = Fixed value 0 1 = Fixed value 1 2 = Fixed value 0 3 = Binector B003 4 = Binector B004 etc. PNU=58B Hex; Type=O2; Normalization: 1==1; Block diag.: [24.1]	0 to 200	Ind: None FS=0	1/UHABR 1/UHAB
H420 *	**Wobb B_Enable** Selection of binector to be injected as the **wobbler enabling signal** 0 = Fixed value 0 1 = Fixed value 1 2 = Fixed value 0 3 = Binector B003 4 = Binector B004 etc. "Wobbling" always starts on a positive zero crossing and always ends on the following crossing. PNU=58C Hex; Type=O2; Normalization: 1==1; Block diag.: [24.6]	0 to 200	Ind: None FS=0	1/UHABR 1/UHAB

Definition of wobbler signal Note: The following parameters are included in the switchover parameter set and have four different datasets each which can be selected by means of the parameter set switchover function				
H421	**Wobb Amplitude** (wobbler amplitude) PNU=58D Hex; Type= O2; Normalization: 1==0.01 % of IN (IN: see H418) Block diag.: [24.2]	0 to +20.00 [% of IN]	Ind: 4 FS=0.00	1/UHABR 1/UHABR
H422	**Wobb Frequency** (wobbler frequency) PNU=58E Hex; Type= O2; Normalization: 1==0.1 faults / min Block diag.: [24.2]	0.1 to 120.0 [faults / min]	Ind: 4 FS=60.0	1/UHABR 1/UHABR
H423	**Wobb Phase-Shift** (phase shift) When H423 = 360, the synchronizing signal from the master is ignored (decoupled wobbling) PNU=58F Hex; Type= O2; Normalization: 1==1 °el; Block diag.: [24.3]	0 to 360 [°el]	Ind: 4 FS=360	1/UHABR 1/UHABR
H424	**Wobb PJump neg** (negative P jump) PNU=590 Hex; Type= O2; Normalization: 1==0.01 % of IN (IN: see H418) Block diag.: [24.4]	0.00 to 100.00 [% of H421]	Ind: 4 FS=0.00	1/UHABR 1/UHABR
H425	**Wobb PJump pos** (positive P jump) PNU=591 Hex; Type= O2; Normalization: 1==0.01 % von IN (IN: see H418) Block diag.: [24.5]	0.00 to 100.00 [% of H421]	Ind: 4 FS=0.00	1/UHABR 1/UHABR
H426	**Wobb Pls/PausRat** (pulse/pause ratio) Proportion of rising edge in % of period of wobbler signal, i.e. in % of 1 / H222 **Example:** H422 = 10.0 Hz / H426 = 40 % • The wobbler signal period is 1 / 10.0 Hz = 100 ms • The rising edge (from lowest to highest point) is 40 % of 100 ms = 40 ms long PNU=592 Hex; Type= O2; Normalization: 1==1 % of T_W (T_W = 1 / H422) Block diag.: [24.6]	0 to 100 [% of T_W]	Ind: 4 FS=50	1/UHABR 1/UHABR

PNU *: Ack. par.	OP1 parameter name Description	Value range [unit] Selection text	No. of indices Factory setting	Read Write (Access / State)

Adders (F590, F680, F950, F1030, F1370)

Adder 1				**F590**
Function: The contents of the connectors selected in H430, H431 and H432 are added. The total is limited to the value range -200.00 to 199.99 % and applied to connector K105				
H430 *****	**ADD1 C_Input 1** Selection of 1st connector of which contents are to be added 0 = Fixed value 0 1 = Fixed value 100 % 2 = Fixed value 0 3 = Connector K003 4 = Connector K004 etc. PNU=596 Hex; Type= O2; Normalization: 1==1; Block diag.: [25.1]	0 to 180	Ind: None FS=0	1/UHABR 1/UHAB
H431 *****	**ADD1 C_Input 2** Selection of 2nd connector of which contents are to be added 0 = Fixed value 0 1 = Fixed value 100 % 2 = Fixed value 0 3 = Connector K003 4 = Connector K004 etc. PNU=597 Hex; Type= O2; Normalization: 1==1; Block diag.: [25.1]	0 to 180	Ind: None FS=0	1/UHABR 1/UHAB
H432 *****	**ADD1 C_Input 3** Selection of 3rd connector of which contents are to be added 0 = Fixed value 0 1 = Fixed value 100 % 2 = Fixed value 0 3 = Connector K003 4 = Connector K004 etc. PNU=598 Hex; Type= O2; Normalization: 1==1; Block diag.: [25.1]	0 to 180	Ind: None FS=0	1/UHABR 1/UHAB

Adder 2				**F680**
Function: The contents of the connectors selected in H433, H434 and H435 are added. The total is limited to the value range -200.00 to 199.99 % and applied to connector K106				
H433 *****	**ADD2 C_Input 1** as for H430 PNU=599 Hex; Type= O2; Normalization: 1==1; Block diag.: [25.3]	0 to 180	Ind: None FS=0	1/UHABR 1/UHAB
H434 *****	**ADD2 C_Input 2** as for H431 PNU=59A Hex; Type= O2; Normalization: 1==1; Block diag.: [25.3]	0 to 180	Ind: None FS=0	1/UHABR 1/UHAB
H435 *****	**ADD2 C_Input 3** as for H432 PNU=59B Hex; Type= O2; Normalization: 1==1; Block diag.: [25.3]	0 to 180	Ind: None FS=0	1/UHABR 1/UHAB

Adder 3				**F950**
Function: The contents of the connectors selected in H436, H437 and H438 are added. The total is limited to the value range -200.00 to 199.99 % and applied to connector K107				
H436 *****	**ADD3 C_Input 1** as for H430 PNU=59C Hex; Type= O2; Normalization: 1==1; Block diag.: [25.4]	0 to 180	Ind: None FS=0	1/UHABR 1/UHAB
H437 *****	**ADD3 C_Input 2** as for H431 PNU=59D Hex; Type= O2; Normalization: 1==1; Block diag.: [25.4]	0 to 180	Ind: None FS=0	1/UHABR 1/UHAB
H438 *****	**ADD3 C_Input 3** as for H432 PNU=59E Hex; Type= O2; Normalization: 1==1; Block diag.: [25.4]	0 to 180	Ind: None FS=0	1/UHABR 1/UHAB

PNU *: Ack. par.	OP1 parameter name Description	Value range [unit] Selection text	No. of indices Factory setting	Read Write (Access / State)
Adder 4				**F1030**
Function: The contents of the connectors selected in H439, H440 and H441 are added. The total is limited to the value range -200.00 to 199.99 % and applied to connector K108				
H439 *	**ADD4 C_Input 1** as for H430 PNU=59F Hex; Type= O2; Normalization: 1==1; Block diag.: [25.6]	0 to 180	Ind: None FS=0	1/UHABR 1/UHAB
H440 *	**ADD4 C_Input 2** as for H431 PNU=5A0 Hex; Type= O2; Normalization: 1==1; Block diag.: [25.6]	0 to 180	Ind: None FS=0	1/UHABR 1/UHAB
H441 *	**ADD4 C_Input 3** as for H432 PNU=5A1 Hex; Type= O2; Normalization: 1==1; Block diag.: [25.6]	0 to 180	Ind: None FS=0	1/UHABR 1/UHAB

Adder 5				**F1370**
Function: The contents of the connectors selected in H442, H443 and H444 are added. The total is limited to the value range -200.00 to 199.99 % and applied to connector K109				
H442 *	**ADD5 C_Input 1** as for H430 PNU=5A2 Hex; Type= O2; Normalization: 1==1; Block diag.: [25.7]	0 to 180	Ind: None FS=0	1/UHABR 1/UHAB
H443 *	**ADD5 C_Input 2** as for H431 PNU=5A3 Hex; Type= O2; Normalization: 1==1; Block diag.: [25.7]	0 to 180	Ind: None FS=0	1/UHABR 1/UHAB
H444 *	**ADD5 C_Input 3** as for H432 PNU=5A4 Hex; Type= O2; Normalization: 1==1; Block diag.: [25.7]	0 to 180	Ind: None FS=0	1/UHABR 1/UHAB

Subtracters (F720, F1070, F1310)

Subtracter 1				**F720**
Function: The contents of the connector selected in H446 are subtracted from the contents of the connector selected in H445. The difference is limited to the value range -200.00 to 199.99 % and applied to connector K110.				
H445 *	**SUB1 C_Input 1** Selection of 1st connector for subtraction 0 = Fixed value 0 1 = Fixed value 100 % 2 = Fixed value 0 3 = Connector K003 4 = Connector K004 etc. PNU=5A5 Hex; Type= O2; Normalization: 1==1; Block diag.: [25.1]	0 to 180	Ind: None FS=0	1/UHABR 1/UHAB
H446 *	**SUB1 C_Input 2** Selection of connector to be subtracted from SUB1 C_Input 1 0 = Fixed value 0 1 = Fixed value 100 % 2 = Fixed value 0 3 = Connector K003 4 = Connector K004 etc. PNU=5A6 Hex; Type= O2; Normalization: 1==1; Block diag.: [25.1]	0 to 180	Ind: None FS=0	1/UHABR 1/UHAB

Subtracter 2				**F1070**
Function: The contents of the connector selected in H448 are subtracted from the contents of the connector selected in H447. The difference is limited to the value range -200.00 to 199.99 % and applied to connector K111.				
H447 *	**SUB2 C_Input 1** as for H445 PNU=5A7 Hex; Type= O2; Normalization: 1==1; Block diag.: [25.3]	0 to 180	Ind: None FS=0	1/UHABR 1/UHAB
H448 *	**SUB2 C_Input 2** as for H446 PNU=5A8 Hex; Type= O2; Normalization: 1==1; Block diag.: [25.3]	0 to 180	Ind: None FS=0	1/UHABR 1/UHAB

PNU *: Ack. par.	OP1 parameter name Description	Value range [unit] Selection text	No. of indices Factory setting	Read Write (Access / State)
Subtracter 3				**F1310**
Function: The contents of the connector selected in H450 are subtracted from the contents of the connector selected in H449. The difference is limited to the value range -200.00 to 199.99 % and applied to connector K112.				
H449 *****	**SUB3 C_Input 1** as for H445 PNU=5A9 Hex; Type= O2; Normalization: 1==1; Block diag.: [25.4]	0 to 180	Ind: None FS=0	1/UHABR 1/UHAB
H450 *****	**SUB3 C_Input 2** as for H446 PNU=5AA Hex; Type= O2; Normalization: 1==1; Block diag.: [25.4]	0 to 180	Ind: None FS=0	1/UHABR 1/UHAB

Sign inverters (F580, F840, F1550, F920)

Sign inverter 1				**F580**
Function: The contents of the connector selected in H451 are negated (two's complement). The result is applied to connector K113.				
H451 *****	**SignInv1 C_Input** Selection of connector for the sign inverter 0 = Fixed value 0 1 = Fixed value 100 % 2 = Fixed value 0 3 = Connector K003 4 = Connector K004 etc. PNU=5AB Hex; Type= O2; Normalization: 1==1; Block diag.: [25.1]	0 to 180	Ind: None FS=0	1/UHABR 1/UHAB

Sign inverter 2				**F840**
Function: The contents of the connector selected in H452 are negated (two's complement). The result is applied to connector K114				
H452 *****	**SignInv2 C_Input** as for H451 PNU=5AC Hex; Type= O2; Normalization: 1==1; Block diag.: [25.3]	0 to 180	Ind: None FS=0	1/UHABR 1/UHAB

Sign inverter 3				**F1550**
Function: The contents of the connector selected in H453 are negated (two's complement). The result is applied to connector K115				
H453 *****	**SignInv3 C_Input** as for H451 PNU=5AD Hex; Type= O2; Normalization: 1==1; Block diag.: [25.4]	0 to 180	Ind: None FS=0	1/UHABR 1/UHAB

Switchable sign inverter				**F920**
Function: The contents of the connector selected in H454 are applied to connector K116 either in an unaltered state or negated (two's complement) depending on the binector selected in H455.				
H454 *****	**SignInvSw C_Inp** Selection of connector to be processed for the switchable sign inverter 0 = Fixed value 0 1 = Fixed value 100 % 2 = Fixed value 0 3 = Connector K003 4 = Connector K004 etc. PNU=5AE Hex; Type= O2; Normalization: 1==1; Block diag.: [25.6]	0 to 180	Ind: None FS=0	1/UHABR 1/UHAB
H455 *****	**SignInvSw B_y=-x** Selection of binector for the switchable sign inverter which controls sign reversal 0 = Fixed value 0 (not inverted) 1 = Fixed value 1 (inverted) 2 = Fixed value 0 (not inverted) 3 = Binector B003 4 = Binector B004 etc. PNU=5AF Hex; Type= O2; Normalization: 1==1; Block diag.: [25.6]	0 to 200	Ind: None FS=0	1/UHABR 1/UHAB

PNU *: Ack. par.	OP1 parameter name Description	Value range [unit] Selection text	No. of indices Factory setting	Read Write (Access / State)

Dividers (F730, F960, F1380)

Divider 1 **F730**

Function: The contents of the connector (x1) selected in H456 are divided by the contents of the connector (x2) selected in H457. The quotient (y) is limited to the value range -200.00 to 199.99 % and applied to connector K117.

Formula: $y = \frac{x1 * 100\%}{x2}$

When divided by 0 (x2 = 0):
when x1 > 0: y = +199.99 %
when x1 = 0: y = 0.00 %
when x1 < 0: y = -200.00 %

H456 *	**DIV1 (x1/x2)C_x1** Selection of 1st connector (x1) for the divider 0 = Fixed value 0 1 = Fixed value 100 % 2 = Fixed value 0 3 = Connector K003 4 = Connector K004 etc. PNU=5B0 Hex; Type= O2; Normalization: 1==1; Block diag.: [26.1]	0 to 180	Ind: None FS=0	1/UHABR 1/UHAB
H457 *	**DIV1 (x1/x2)C_x2** Selection of 2nd connector (x2) for the divider 0 = Fixed value 0 1 = Fixed value 100 % 2 = Fixed value 0 3 = Connector K003 4 = Connector K004 etc. PNU=5B1 Hex; Type= O2; Normalization: 1==1; Block diag.: [26.1]	0 to 180	Ind: None FS=1	1/UHABR 1/UHAB

Divider 2 **F960**

Function: The contents of the connector (x1) selected in H458 are divided by the contents of the connector (x2) selected in H459. The quotient (y) is limited to the value range -200.00 to 199.99 % and applied to connector K118.

Formula: $y = \frac{x1 * 100\%}{x2}$

When divided by 0 (x2 = 0):
when x1 > 0: y = +199.99 %
when x1 = 0: y = 0.00 %
when x1 < 0: y = -200.00 %

H458 *	**DIV2 (x1/x2)C_x1** as for H456 PNU=5B2 Hex; Type= O2; Normalization: 1==1; Block diag.: [26.1]	0 to 180	Ind: None FS=0	1/UHABR 1/UHAB
H459 *	**DIV2 (x1/x2)C_x2** as for H457 PNU=5B3 Hex; Type= O2; Normalization: 1==1; Block diag.: [26.1]	0 to 180	Ind: None FS=1	1/UHABR 1/UHAB

Divider 3 **F1380**

Function: The contents of the connector (x1) selected in H460 are divided by the contents of the connector (x2) selected in H461. The quotient (y) is limited to the value range -200.00 to 199.99 % and applied to connector K119.

Formula: $y = \frac{x1 * 100\%}{x2}$

When divided by 0 (x2 = 0):
when x1 > 0: y = +199.99 %
when x1 = 0: y = 0.00 %
when x1 < 0: y = -200.00 %

H460 *	**DIV3 (x1/x2)C_x1** as for H456 PNU=5B4 Hex; Type= O2; Normalization: 1==1; Block diag.: [26.1]	0 to 180	Ind: None FS=0	1/UHABR 1/UHAB
H461 *	**DIV3 (x1/x2)C_x2** as for H457 PNU=5B5 Hex; Type= O2; Normalization: 1==1; Block diag.: [26.1]	0 to 180	Ind: None FS=1	1/UHABR 1/UHAB

PNU *: Ack. par.	OP1 parameter name Description	Value range [unit] Selection text	No. of indices Factory setting	Read Write (Access / State)

Multipliers (F650, F750, F1080, F1460)

Multiplier 1				F650
Function: The contents of the connector (x1) selected in H462 are multiplied by the contents of the connector (x2) selected in H463. The product (y) is limited to the value range -200.00 to 199.99 % and applied to connector K120. Formula: $y = \frac{x1 * x2}{100\%}$				
H462 *	**MUL1 C_x1** Selection of 1st connector (x1) for the multiplier 0 = Fixed value 0 1 = Fixed value 100 % 2 = Fixed value 0 3 = Connector K003 4 = Connector K004 etc. PNU=5B6 Hex; Type= O2; Normalization: 1==1; Block diag.: [26.3]	0 to 180	Ind: None FS=0	1/UHABR 1/UHAB
H463 *	**MUL1 C_x2** Selection of 2nd connector (x2) for the multiplier 0 = Fixed value 0 1 = Fixed value 100 % 2 = Fixed value 0 3 = Connector K003 4 = Connector K004 etc. PNU=5B7 Hex; Type= O2; Normalization: 1==1; Block diag.: [26.3]	0 to 180	Ind: None FS=0	1/UHABR 1/UHAB

Multiplier 2				F750
Function: The contents of the connector (x1) selected in H464 are multiplied by the contents of the connector (x2) selected in H465. The product (y) is limited to the value range -200.00 to 199.99 % and applied to connector K121. Formula: $y = \frac{x1 * x2}{100\%}$				
H464 *	**MUL2 C_x1** as for H462 PNU=5B8 Hex; Type= O2; Normalization: 1==1; Block diag.: [26.4]	0 to 180	Ind: None FS=0	1/UHABR 1/UHAB
H465 *	**MUL2 C_x2** as for H463 PNU=5B9 Hex; Type= O2; Normalization: 1==1; Block diag.: [26.4]	0 to 180	Ind: None FS=0	1/UHABR 1/UHAB

Multiplier 3				F1080
Function: The contents of the connector (x1) selected in H466 are multiplied by the contents of the connector (x2) selected in H467. The product (y) is limited to the value range -200.00 to 199.99 % and applied to connector K122. Formula: $y = \frac{x1 * x2}{100\%}$				
H466 *	**MUL3 C_x1** as for H462 PNU=5BA Hex; Type= O2; Normalization: 1==1; Block diag.: [26.6]	0 to 180	Ind: None FS=0	1/UHABR 1/UHAB
H467 *	**MUL3 C_x2** as for H463 PNU=5BB Hex; Type= O2; Normalization: 1==1; Block diag.: [26.6]	0 to 180	Ind: None FS=0	1/UHABR 1/UHAB

Multiplier 4				F1460
Function: The contents of the connector (x1) selected in H468 are multiplied by the contents of the connector (x2) selected in H469. The product (y) is limited to the value range -200.00 to 199.99 % and applied to connector K123. Formula: $y = \frac{x1 * x2}{100\%}$				
H468 *	**MUL4 C_x1** as for H462 PNU=5BC Hex; Type= O2; Normalization: 1==1; Block diag.: [26.7]	0 to 180	Ind: None FS=0	1/UHABR 1/UHAB

PNU *: Ack. par.	OP1 parameter name Description	Value range [unit] Selection text	No. of indices Factory setting	Read Write (Access / State)
H469 *	**MUL4 C_x2** as for H463 PNU=5BD Hex; Type= O2; Normalization: 1==1; Block diag.: [26.7]	0 to 180	Ind: None FS=0	1/UHABR 1/UHAB

High-resolution multipliers/dividers (F740, F910, F1150)

High-resolution multiplier/divider 1 **F740**

Function: The contents of the connector (x1) selected in H470 are multiplied by the contents of the connector (x2) selected in H471. The product (x4) is divided by the contents of the connector (x3) selected in H472. The quotient (y) is limited to the value range -200.00 to 199.99 % and applied to connector K124. The contents of connector K124 are output in display parameter d070.

Formulae: $x4(32bit) = x1 * x2.\ y = \frac{x4}{x3} = \frac{x1 * x2}{x3}$

When divided by 0 (x3 = 0):
when x4 > 0: y = +199.99 %
when x4 = 0: y = 0.00 %
when x4 < 0: y = -200.00 %

H470 *	**MULDIV1 C_x1** Selection of the 1st connector (x1) for the high-resolution multiplier/divider 0 = Fixed value 0 1 = Fixed value 100 % 2 = Fixed value 0 3 = Connector K003 4 = Connector K004 etc. PNU=5BE Hex; Type= O2; Normalization: 1==1; Block diag.: [26.3]	0 to 180	Ind: None FS=0	1/UHABR 1/UHAB
H471 *	**MULDIV1 C_x2** Selection of the 2nd connector (x2) for the high-resolution multiplier/divider 0 = Fixed value 0 1 = Fixed value 100 % 2 = Fixed value 0 3 = Connector K003 4 = Connector K004 etc. PNU=5BF Hex; Type= O2; Normalization: 1==1; Block diag.: [26.3]	0 to 180	Ind: None FS=0	1/UHABR 1/UHAB
H472 *	**MULDIV1 C_x3** Selection of the 3rd connector (x3) for the high-resolution multiplier/divider 0 = Fixed value 0 1 = Fixed value 100 % 2 = Fixed value 0 3 = Connector K003 4 = Connector K004 etc. PNU=5C0 Hex; Type= O2; Normalization: 1==1; Block diag.: [26.3]	0 to 180	Ind: None FS=1	1/UHABR 1/UHAB

High-resolution multiplier/divider 2 **F910**

Function: The contents of the connector (x1) selected in H474 are multiplied by the contents of the connector (x2) selected in H475. The product (x4) is divided by the contents of the connector (x3) selected in H476. The quotient (y) is limited to the value range -200.00 to 199.99 % and applied to connector K125. The contents of connector K125 are output in display parameter d071.

Formulae: $x4(32bit) = x1 * x2.\ y = \frac{x4}{x3} = \frac{x1 * x2}{x3}$

When divided by 0 (x3 = 0):
when x4 > 0: y = +199.99 %
when x4 = 0: y = 0.00 %
when x4 < 0: y = -200.00 %

H474 *	**MULDIV2 C_x1** as for H470 PNU=5C2 Hex; Type= O2; Normalization: 1==1; Block diag.: [26.6]	0 to 180	Ind: None FS=0	1/UHABR 1/UHAB
H475 *	**MULDIV2 C_x2** as for H471 PNU=5C3 Hex; Type= O2; Normalization: 1==1; Block diag.: [26.6]	0 to 180	Ind: None FS=0	1/UHABR 1/UHAB

PNU *: Ack. par.	OP1 parameter name Description	Value range [unit] Selection text	No. of indices Factory setting	Read Write (Access / State)
H476 *	**MULDIV2 C_x3** as for H472 PNU=5C4 Hex; Type= O2; Normalization: 1==1; Block diag.: [26.6]	0 to 180	Ind: None FS=1	1/UHABR 1/UHAB

High-resolution multiplier/divider 3 **F1150**

Function: The contents of the connector (x1) selected in H478 are multiplied by the contents of the connector (x2) selected in H479. The product (x4) is divided by the contents of the connector (x3) selected in H480. The quotient (y) is limited to the value range -200.00 to 199.99 % and applied to connector K126. The contents of connector K126 are output in display parameter d072.

Formulae: $x4(32bit) = x1 * x2$. $y = \frac{x4}{x3} = \frac{x1 * x2}{x3}$

When divided by 0 (x3 = 0):
when x4 > 0: y = +199.99 %
when x4 = 0: y = 0.00 %
when x4 < 0: y = -200.00 %

H478 *	**MULDIV3 C_x1** as for H470 PNU=5C6 Hex; Type= O2; Normalization: 1==1; Block diag.: [26.3]	0 to 180	Ind: None FS=0	1/UHABR 1/UHAB
H479 *	**MULDIV3 C_x2** as for H471 PNU=5C7 Hex; Type= O2; Normalization: 1==1; Block diag.: [26.3]	0 to 180	Ind: None FS=0	1/UHABR 1/UHAB
H480 *	**MULDIV3 C_x3** as for H472 PNU=5C8 Hex; Type= O2; Normalization: 1==1; Block diag.: [26.3]	0 to 180	Ind: None FS=1	1/UHABR 1/UHAB

Absolute-value generators with filter (F440, F1320, F1530, F1580)

Absolute-value generator with filter 1 **F440**

Function: The contents of the connector selected in H482 are injected according to the mode selected in H483 and filtered according to H484. The output signal is applied to K127.

H482 *	**AbsFilt1 C_Input** Selection of connector to be applied as the input quantity to the absolute-value generator with filter 0 = Fixed value 0 1 = Fixed value 100 % 2 = Fixed value 0 3 = Connector K003 4 = Connector K004 etc. PNU=5CA Hex; Type= O2; Normalization: 1==1; Block diag.: [27.1]	0 to 180	Ind: None FS=0	1/UHABR 1/UHAB
H483 *	**AbsFilt1 Mode** Selection of mode for injecting signals to absolute-value generator with filter 0 = Signal injection according to sign 1 = Injection of signal absolute value 2 = Signed signal injection, inverted 3 = Injection of absolute value of signal, inverted PNU=5CB Hex; Type=O2; Normalization: 1==1; Block diag.: [27.2]	0 to 3 y= Signal y= |Signal| y= -Signal y=-|Signal|	Ind: None FS=0	1/UHABR 1/UHAB
H484	**AbsFilt1 Timems** Filter time for absolute-value generator with filter PNU=5CC Hex; Type=O2. Normalization: 1==1 ms; Block diag.: [27.3]	0 to 10000 [ms]	Ind: None FS=0	1/UHABR 1/UHABR

Absolute-value generator with filter 2 **F1320**

Function: The contents of the connector selected in H485 are injected according to the mode selected in H486 and filtered according to H487. The output signal is applied to K128.

H485 *	**AbsFilt2 C_Input** as for H482 PNU=5CD Hex; Type= O2; Normalization: 1==1; Block diag.: [27.1]	0 to 180	Ind: None FS=0	1/UHABR 1/UHAB
H486 *	**AbsFilt2 Mode** as for H483 PNU=5CE Hex; Type=O2; Normalization: 1==1; Block diag.: [27.2]	0 to 3	Ind: None FS=0	1/UHABR 1/UHAB
H487	**AbsFilt2 Timems** as for H484 PNU=5CF Hex; Type=O2. Normalization: 1==1 ms; Block diag.: [27.3]	0 to 10000 [ms]	Ind: None FS=0	1/UHABR 1/UHABR

PNU *: Ack. par.	OP1 parameter name Description	Value range [unit] Selection text	No. of indices Factory setting	Read Write (Access / State)
Absolute-value generator with filter 3				**F1530**
Function: The contents of the connector selected in H488 are injected according to the mode selected in H489 and filtered according to H490. The output signal is applied to K129.				
H488 *	**AbsFilt3 C_Input** as for H482 PNU=5D0 Hex; Type= O2; Normalization: 1==1; Block diag.: [27.1]	0 to 180	Ind: None FS=0	1/UHABR 1/UHAB
H489 *	**AbsFilt3 Mode** as for H483 PNU=5D1 Hex; Type=O2; Normalization: 1==1; Block diag.: [27.2]	0 to 3	Ind: None FS=0	1/UHABR 1/UHAB
H490	**AbsFilt3 Timems** as for H484 PNU=5D2 Hex; Type=O2. Normalization: 1==1 ms; Block diag.: [27.3]	0 to 10000 [ms]	Ind: None FS=0	1/UHABR 1/UHABR

Absolute-value generator with filter 4				**F1580**
Function: The contents of the connector selected in H491 are injected according to the mode selected in H492 and filtered according to H493. The output signal is applied to K130.				
H491 *	**AbsFilt4 C_Input** as for H482 PNU=5D3 Hex; Type= O2; Normalization: 1==1; Block diag.: [27.1]	0 to 180	Ind: None FS=0	1/UHABR 1/UHAB
H492 *	**AbsFilt4 Mode** as for H483 PNU=5D4 Hex; Type=O2; Normalization: 1==1; Block diag.: [27.2]	0 to 3	Ind: None FS=0	1/UHABR 1/UHAB
H493	**AbsFilt4 Timems** as for H484 PNU=5D5 Hex; Type=O2. Normalization: 1==1 ms; Block diag.: [27.3]	0 to 10000 [ms]	Ind: None FS=0	1/UHABR 1/UHABR

Limiters (F1190, F1470)

Limiter 1				**F1190**
Function: The contents of the input quantity (x) selected in H494 are limited to the values selected in H495 (L+) and H497 (L-). The output signal (y) is applied to K173. Violation of the limit values is signalled via B119 and B120.				
H494 *	**Limitr1 C_Input** Selection of connector which is to be applied as the input quantity (x) to the limiter 0 = Fixed value 0 1 = Fixed value 100 % 2 = Fixed value 0 3 = Connector K003 4 = Connector K004 etc. PNU=5D6 Hex; Type= O2; Normalization: 1==1; Block diag.: [27.1]	0 to 180	Ind: None FS=0	1/UHABR 1/UHAB
H495 *	**Limitr1 C_LmtL+** Selection of connector to be applied to the limiter as the positive limitation value (L+) 0 = Fixed value 0 1 = Fixed value 100 % 2 = Fixed value 0 3 = Connector K003 4 = Connector K004 etc. Note: Parameter H496 is connected to connector K171. By setting H495=171, this value can be injected as a positive limitation value. PNU=5D7 Hex; Type= O2; Normalization: 1==1; Block diag.: [27.2]	0 to 180	Ind: None FS=171	1/UHABR 1/UHAB
H496	**Limitr1 FixLm L+** Limitation value for the limiter PNU=5D8 Hex; Type=I2; Normalization: 1==0.01 %; Block diag.: [27.1]	-200.00 to 199.99 [%]	Ind: None FS=100.00	1/UHABR 1/UHABR

PNU *: Ack. par.	OP1 parameter name Description	Value range [unit] Selection text	No. of indices Factory setting	Read Write (Access / State)
H497 *	**Limitr1 C_LmtL-** Selection of connector to be applied to the limiter as the negative limitation value (L-) 0 = Fixed value 0 1 = Fixed value 100 % 2 = Fixed value 0 3 = Connector K003 4 = Connector K004 etc. Note: The positive limitation value selected in H495 is applied with inverted sign to connector K172. By setting H497 = 172, it is possible to inject this value as a negative limitation. PNU=5D9 Hex; Type= O2; Normalization: 1==1; Block diag.: [27.2]	0 to 180	Ind: None FS=172	1/UHABR 1/UHAB

Limiter 2

Function: The contents of the input quantity (x) selected in H498 are limited to the values selected in H499 (L+) and H501 (L-). The output signal (y) is applied to K176. Violation of the limit values is signalled via B121 and B122.

H498 *	**Limitr2 C_Input** as for H494 PNU=5DA Hex; Type= O2; Normalization: 1==1; Block diag.: [27.5]	0 to 180	Ind: None FS=0	1/UHABR 1/UHAB
H499 *	**Limitr2 C_LmtL+** as for H495 Note: Parameter H500 is connected to connector K174. By setting H499=174, this value can be injected as a positive limitation value. PNU=5DB Hex; Type= O2; Normalization: 1==1; Block diag.: [27.5]	0 to 180	Ind: None FS=174	1/UHABR 1/UHAB
H500	**Limitr2 FixLm L+** as for H496 PNU=5DC Hex; Type=I2; Normalization: 1==0.01 %; Block diag.: [27.5]	-200.00 to 199.99 [%]	Ind: None FS=100.00	1/UHABR 1/UHABR
H501 *	**Limitr2 C_LmtL-** as for H497 **Note:** The positive limitation value selected in H499 is applied with inverted sign to connector K175. By setting H501 = 175, it is possible to inject this value as a negative limitation. PNU=5DD Hex; Type= O2; Normalization: 1==1; Block diag.: [27.5]	0 to 180	Ind: None FS=175	1/UHABR 1/UHAB

Limit-value monitors with filter (F830, F1540)

Limit-value monitor with filter 1				**F830**
H502 *	**LmtVlMon1 C_InpA** Selection of connector to be applied as input quantity (A) to the limit-value monitor with filter 0 = Fixed value 0 1 = Fixed value 100 % 2 = Fixed value 0 3 = Connector K003 4 = Connector K004 etc. PNU=5DE Hex; Type= O2; Normalization: 1==1; Block diag.: [27.4]	0 to 180	Ind: None FS=0	1/UHABR 1/UHAB
H503	**LmtMon1FiltTm_ms** Filter time for input quantity (A) of limit-value monitor with filter PNU=5DF Hex; Type=O2. Normalization: 1==1 ms; Block diag.: [27.5]	0 to 10000 [ms]	Ind: None FS=0	1/UHABR 1/UHABR

PNU *: Ack. par.	OP1 parameter name Description	Value range [unit] Selection text	No. of indices Factory setting	Read Write (Access / State)
H504 *	**LmtVlMon1 C_InpB** Selection of connector to be injected as operating threshold (B) to limit-value monitor with filter 1 0 = Fixed value 0 1 = Fixed value 100 % 2 = Fixed value 0 3 = Connector K003 4 = Connector K004 etc. Note: Parameter H505 is connected to connector K132. By setting H504=132, this value can be injected as the operating threshold. PNU=5E0 Hex; Type= O2; Normalization: 1==1; Block diag.: [27.5]	0 to 180	Ind: None FS=132	1/UHABR 1/UHAB
H505	**LmtVlMon1 FixThr** Adjustable operating threshold for limit-value monitor with filter 1 PNU=5E1 Hex; Type=I2; Normalization: 1==0.01 %; Block diag.: [27.4]	-200.00 to 199.99 [%]	Ind: None FS=0.00	1/UHABR 1/UHABR
H506	**LmtVlMon1 Hyster** Hysteresis for limit-value monitor with filter PNU=5E2 Hex; Type=O2; Normalization: 1==0.01 %; Block diag.: [27.6]	0.00 to 199.99 [%]	Ind: None FS=0.00	1/UHABR 1/UHABR
H507 *	**LmtVlMon1 CompMd** Selection of response mode for limit-value monitor with filter 1 0 = |A| < B supplies log. ”1” at B123 1 = A < B supplies log. ”1” at B123 2 = A = B supplies log. ”1” at B123 PNU=5E3 Hex; Type=O2; Normalization: 1==1; Block diag.: [27.8]	0 to 2 |A| < B A < B A = B	Ind: None FS=0	1/UHABR 1/UHAB

Limit-value monitor with filter 2				**F1540**
H508 *	**LmtVlMon2 C_InpA** as for H502 PNU=5E4 Hex; Type= O2; Normalization: 1==1; Block diag.: [27.4]	0 to 180	Ind: None FS=0	1/UHABR 1/UHAB
H509	**LmtMon2FiltTm_ms** as for H503 PNU=5E5 Hex; Type=O2. Normalization: 1==1 ms; Block diag.: [27.5]	0 to 10000 [ms]	Ind: None FS=0	1/UHABR 1/UHABR
H510 *	**LmtVlMon2 C_InpB** as for H504 Note: Parameter H511 is connected to connector K134. By setting H510=134, this value can be injected as the operating threshold. PNU=5E6 Hex; Type= O2; Normalization: 1==1; Block diag.: [27.5]	0 to 180	Ind: None FS=134	1/UHABR 1/UHAB
H511	**LmtVlMon2 FixThr** as for H505 PNU=5E7 Hex; Type=I2; Normalization: 1==0.01 %; Block diag.: [27.4]	-200.00 to 199.99 [%]	Ind: None FS=0.00	1/UHABR 1/UHABR
H512	**LmtVlMon2 Hyster** as for H506 PNU=5E8 Hex; Type=O2; Normalization: 1==0.01 %; Block diag.: [27.6]	0.00 to 199.99 [%]	Ind: None FS=0.00	1/UHABR 1/UHABR
H513 *	**LmtVlMon2 CompMd** Selection of response mode for limit-value monitor with filter 2 0 = |A| < B supplies log. ”1” at B124 1 = A < B supplies log. ”1” at B124 2 = A = B supplies log. ”1” at B124 PNU=5E9 Hex; Type=O2; Normalization: 1==1; Block diag.: [27.8]	0 to 2 |A| < B A < B A = B	Ind: None FS=0	1/UHABR 1/UHAB

PNU *: Ack. par.	OP1 parameter name Description	Value range [unit] Selection text	No. of indices Factory setting	Read Write (Access / State)

Maximum/minimum selection (F1390, F1400)

Maximum selection				**F1390**
Function: Der highest of the input values selected with H514 (x1), H515 (x2) and H516 (x3) is applied to connector K135.				
H514 *****	**MAXIMUM C_Inp.1** Selection of connector to be applied as input quantity (x1) to the maximum selection 0 = Fixed value 0 1 = Fixed value 100 % 2 = Fixed value 0 3 = Connector K003 4 = Connector K004 etc. PNU=5EA Hex; Type= O2; Normalization: 1==1; Block diag.: [28.1]	0 to 180	Ind: None FS=0	1/UHABR 1/UHAB
H515 *****	**MAXIMUM C_Inp.2** Selection of connector to be applied as input quantity (x2) to the maximum selection 0 = Fixed value 0 1 = Fixed value 100 % 2 = Fixed value 0 3 = Connector K003 4 = Connector K004 etc. PNU=5EB Hex; Type= O2; Normalization: 1==1; Block diag.: [28.1]	0 to 180	Ind: None FS=0	1/UHABR 1/UHAB
H516 *****	**MAXIMUM C_Inp.3** Selection of connector to be applied as input quantity (x3) to the maximum selection 0 = Fixed value 0 1 = Fixed value 100 % 2 = Fixed value 0 3 = Connector K003 4 = Connector K004 etc. PNU=5EC Hex; Type= O2; Normalization: 1==1; Block diag.: [28.1]	0 to 180	Ind: None FS=0	1/UHABR 1/UHAB

Minimum selection				**F1400**
Function: The lowest of the input values selected in H517 (x1), H518 (x2) and H519 (x3) is applied to connector K136				
H517 *****	**MINIMUM C_Inp.1** Selection of connector to be applied as input quantity (x1) to the minimum selection 0 = Fixed value 0 1 = Fixed value 100 % 2 = Fixed value 0 3 = Connector K003 4 = Connector K004 etc. PNU=5ED Hex; Type= O2; Normalization: 1==1; Block diag.: [28.1]	0 to 180	Ind: None FS=0	1/UHABR 1/UHAB

PNU *: Ack. par.	OP1 parameter name Description	Value range [unit] Selection text	No. of indices Factory setting	Read Write (Access / State)
H518 *	**MINIMUM C_Inp.2** Selection of connector to be applied as input quantity (x2) to the minimum selection 0 = Fixed value 0 1 = Fixed value 100 % 2 = Fixed value 0 3 = Connector K003 4 = Connector K004 etc. PNU=5EE Hex; Type= O2; Normalization: 1==1; Block diag.: [28.1]	0 to 180	Ind: None FS=0	1/UHABR 1/UHAB
H519 *	**MINIMUM C_Inp.3** Selection of connector to be applied as input quantity (x3) to the minimum selection 0 = Fixed value 0 1 = Fixed value 100 % 2 = Fixed value 0 3 = Connector K003 4 = Connector K004 etc. PNU=5EF Hex; Type= O2; Normalization: 1==1; Block diag.: [28.1]	0 to 180	Ind: None FS=0	1/UHABR 1/UHAB

Tracking/storage elements (F450, F460)

Tracking/storage element 1 **F450**

Function: Tracking/storage element 1 is a store for the contents of the connector (x) selected in H520. The output (y) is applied to K137.

The transfer of the input quantity is controlled by the functions RESET, TRACK and STORE:

RESET: When the binector selected in H521 assumes the "1" state, the output is set to 0.00 % (y=0)

TRACK: When the binector selected in H522 assumes the "1" state, the output is set to the input value and is made to follow it continuously (y=x). If the TRACK signal switches from 1 to 0, then the last value applied to output y is "frozen".

STORE: When the binector selected in H523 switches from the "0" to the "1" state, then the output is fixed at the input value present at the instant of transition (y=x). This value then remains stored.

Priority: 1. RESET. 2. TRACK. 3. STORE

H520 *	**Trck/Str1 C_Inp.** Selection of connector to be injected as the input quantity (x) 0 = Fixed value 0 1 = Fixed value 100 % 2 = Fixed value 0 3 = Connector K003 4 = Connector K004 etc. PNU=5F0 Hex; Type= O2; Normalization: 1==1; Block diag.: [28.4]	0 to 180	Ind: None FS=0	1/UHABR 1/UHAB
H521 *	**Trck/St1 B_RESET** Selection of binector to control the RESET function 0 = Fixed value 0 1 = Fixed value 1 2 = Fixed value 0 3 = Binector B003 4 = Binector B004 etc. PNU=5F1 Hex; Type= O2; Normalization: 1==1; Block diag.: [28.4]	0 to 200	Ind: None FS=0	1/UHABR 1/UHAB

PNU *: Ack. par.	OP1 parameter name Description	Value range [unit] Selection text	No. of indices Factory setting	Read Write (Access / State)
H522 *	**Trck/St1 B_TRACK** Selection of binector to control the TRACK function 0 = Fixed value 0 1 = Fixed value 1 2 = Fixed value 0 3 = Binector B003 4 = Binector B004 etc. PNU=5F2 Hex; Type= O2; Normalization: 1==1; Block diag.: [28.4]	0 to 200	Ind: None FS=0	1/UHABR 1/UHAB
H523 *	**Trck/St1 B_STORE** Selection of binector to control the STORE function 0 = Fixed value 0 1 = Fixed value 1 2 = Fixed value 0 3 = Binector B003 4 = Binector B004 etc. PNU=5F3 Hex; Type= O2; Normalization: 1==1; Block diag.: [28.4]	0 to 200	Ind: None FS=0	1/UHABR 1/UHAB
H524 *	**Trck/St1 PwrMode** Control word for the **Power On Mode** for the tracking/storage element 0 = No non-volatile storage: Zero at output on power supply recovery 1 = Non-volatile storage: In the event of supply disconnection or failure, the instantaneous output value is stored and output again on supply recovery. PNU=5F4 Hex; Type=O2; Normalization: 1==1; Block diag.: [28.5]	0 to 1 Volatile Non-volat.	Ind: None FS=0	1/UHABR 1/UHAB

Tracking/storage element 2 **F460**

Function: Tracking/storage element 2 is a store for the contents of the connector (x) selected in H525. The output (y) is applied to K138.

The transfer of the input quantity is controlled by the functions RESET, TRACK and STORE:

RESET: When the binector selected in H526 assumes the "1" state, the output is set to 0.00 % (y=0)

TRACK: When the binector selected in H527 assumes the "1" state, the output is set to the input value and is made to follow it continuously (y=x). If the TRACK signal switches from 1 to 0, then the last value applied to output y is "frozen".

STORE: When the binector selected in H528 switches from the "0" to the "1" state, then the output is fixed at the input value present at the instant of transition (y=x). This value then remains stored.

Priority: 1. RESET. 2. TRACK. 3. STORE

H525 *	**Trck/Str2 C_Inp.** as for H520 PNU=5F5 Hex; Type=O2; Normalization: 1==1; Block diag.: [28.6]	0 to 180	Ind: None FS=0	1/UHABR 1/UHAB
H526 *	**Trck/St2 B_RESET** as for H521 PNU=5F6 Hex; Type=O2; Normalization: 1==1; Block diag.: [28.6]	0 to 200	Ind: None FS=0	1/UHABR 1/UHAB
H527 *	**Trck/St2 B_TRACK** as for H522 PNU=5F7 Hex; Type=O2; Normalization: 1==1; Block diag.: [28.6]	0 to 200	Ind: None FS=0	1/UHABR 1/UHAB
H528 *	**Trck/St2 B_STORE** as for H523 PNU=5F8 Hex; Type=02; Normalization: 1==1; Block diag.: [28.6]	0 to 200	Ind: None FS=0	1/UHABR 1/UHAB
H529 *	**Trck/St2 PwrMode** as for H524 PNU=5F9 Hex; Type=O2; Normalization: 1==1; Block diag.: [28.8]	0 to 1	Ind: None FS=0	1/UHABR 1/UHAB

PNU *: Ack. par.	OP1 parameter name Description	Value range [unit] Selection text	No. of indices Factory setting	Read Write (Access / State)

Analog signal memories (F470, F480)

Analog signal memory 1 **F470**

Function: Analog signal memory 1 is a storage element for the contents of the connector (x) selected in H530.
The output (y) is applied to K139.
As long as a log. "1" signal is applied to the SET input, output quantity y continuously follows input quantity x.
If the signal at the SET input changes from log. "1" to log. "0", the instantaneous value of x is stored and output continuously at y.
The output (y) is set to 0 on POWER ON.

H530 *	**AnaStor1 C_Inp.** Selection of connector to be injected as the input quantity (x) 0 = Fixed value 0 1 = Fixed value 100 % 2 = Fixed value 0 3 = Connector K003 4 = Connector K004 etc. PNU=5FA Hex; Type= O2; Normalization: 1==1; Block diag.: [28.4]	0 to 180	Ind: None FS=0	1/UHABR 1/UHAB
H531 *	**AnaStor1 B_SET** Selection of binector to control the SET function 0 = Fixed value 0 1 = Fixed value 1 2 = Fixed value 0 3 = Binector B003 4 = Binector B004 etc. PNU=5FB Hex; Type= O2; Normalization: 1==1; Block diag.: [28.4]	0 to 200	Ind: None FS=0	1/UHABR 1/UHAB

Analog signal memory 2 **F480**

Function: Analog signal memory 2 is a storage element for the contents of the connector (x) selected in H532.
The output (y) is applied to K140.
As long as a log. "1" signal is applied to the SET input, output quantity y continuously follows input quantity x.
If the signal at the SET input changes from log. "1" to log. "0", the instantaneous value of x is stored and output continuously at y.
The output (y) is set to 0 on POWER ON.

H532 *	**AnaStor2 C_Inp.** as for H530 PNU=5FC Hex; Type= O2; Normalization: 1==1; Block diag.: [28.6]	0 to 180	Ind: None FS=0	1/UHABR 1/UHAB
H533 *	**AnaStor2 B_SET** as for H531 PNU=5FD Hex; Type= O2; Normalization: 1==1; Block diag.: [28.6]	0 to 200	Ind: None FS=0	1/UHABR 1/UHAB

Analog signal switches (F490, F550, F640, F780, F810, F860, F1060, F1130, F1160, F1220)

Analog signal switch 1 **F490**

Function: Depending on the state of the binector selected in H534, the connector selected in H535 (with binector state = 0) or in H536 (with binector state = 1) is applied to the input of connector K141

H534 *	**AnSwitch1 B_0/1** Selection of binector to control switchover operation 0 = Fixed value 0 1 = Fixed value 1 2 = Fixed value 0 3 = Binector B003 4 = Binector B004 etc. PNU=5FE Hex; Type= O2; Normalization: 1==1; Block diag.: [29.2]	0 to 200	Ind: None FS=0	1/UHABR 1/UHAB

PNU *: Ack. par.	OP1 parameter name Description	Value range [unit] Selection text	No. of indices Factory setting	Read Write (Access / State)
H535 *	**AnSwitch1 C_Inp0** Selection of connector to be injected as the input quantity with binector state = 0 0 = Fixed value 0 1 = Fixed value 100 % 2 = Fixed value 0 3 = Connector K003 4 = Connector K004 etc. PNU=5FF Hex; Type= O2; Normalization: 1==1; Block diag.: [29.2]	0 to 180	Ind: None FS=0	1/UHABR 1/UHAB
H536 *	**AnSwitch1 C_Inp1** Selection of connector to be injected as the input quantity with binector state = 1 0 = Fixed value 0 1 = Fixed value 100 % 2 = Fixed value 0 3 = Connector K003 4 = Connector K004 etc. PNU=600 Hex; Type= O2; Normalization: 1==1; Block diag.: [29.2]	0 to 180	Ind: None FS=0	1/UHABR 1/UHAB

Analog signal switch 2 **F550** Function: Depending on the state of the binector selected in H537, the connector selected in H538 (with binector state = 0) or in H539 (with binector state = 1) is applied to the input of connector K142				
H537 *	**AnSwitch2 B_0/1** as for H534 PNU=601 Hex; Type= O2; Normalization: 1==1; Block diag.: [29.2]	0 to 200	Ind: None FS=0	1/UHABR 1/UHAB
H538 *	**AnSwitch2 C_Inp0** as for H535 PNU=602 Hex; Type= O2; Normalization: 1==1; Block diag.: [29.2]	0 to 180	Ind: None FS=0	1/UHABR 1/UHAB
H539 *	**AnSwitch2 K_Inp1** as for H536 PNU=603 Hex; Type= O2; Normalization: 1==1; Block diag.: [29.2]	0 to 180	Ind: None FS=0	1/UHABR 1/UHAB

Analog signal switch 3 **F640** Function: Depending on the state of the binector selected in H540, the connector selected in H541 (with binector state = 0) or in H542 (with binector state = 1) is applied to the input of connector K143				
H540 *	**AnSwitch3 B_0/1** as for H534 PNU=604 Hex; Type= O2; Normalization: 1==1; Block diag.: [29.2]	0 to 200	Ind: None FS=0	1/UHABR 1/UHAB
H541 *	**AnSwitch3 C_Inp0** as for H535 PNU=605 Hex; Type= O2; Normalization: 1==1; Block diag.: [29.2]	0 to 180	Ind: None FS=0	1/UHABR 1/UHAB
H542 *	**AnSwitch3 C_Inp1** as for H536 PNU=606 Hex; Type= O2; Normalization: 1==1; Block diag.: [29.2]	0 to 180	Ind: None FS=0	1/UHABR 1/UHAB

Analog signal switch 4 **F780** Function: Depending on the state of the binector selected in H543, the connector selected in H544 (with binector state = 0) or in H542 (with binector state = 1) is applied to the input of connector K144				
H543 *	**AnSwitch4 B_0/1** as for H534 PNU=607 Hex; Type= O2; Normalization: 1==1; Block diag.: [29.2]	0 to 200	Ind: None FS=0	1/UHABR 1/UHAB
H544 *	**AnSwitch4 C_Inp0** as for H535 PNU=608 Hex; Type= O2; Normalization: 1==1; Block diag.: [29.2]	0 to 180	Ind: None FS=0	1/UHABR 1/UHAB
H545 *	**AnSwitch4 C_Inp1** as for H536 PNU=609 Hex; Type= O2; Normalization: 1==1; Block diag.: [29.2]	0 to 180	Ind: None FS=0	1/UHABR 1/UHAB

PNU *: Ack. par.	OP1 parameter name Description	Value range [unit] Selection text	No. of indices Factory setting	Read Write (Access / State)
Analog signal switch 5				**F810**
Function: Depending on the state of the binector selected in H546, the connector selected in H547 (with binector state = 0) or in H548 (with binector state = 1) is applied to the input of connector K145				
H546 *	**AnSwitch5 B_0/1** as for H534 PNU=60A Hex; Type= O2; Normalization: 1==1; Block diag.: [29.4]	0 to 200	Ind: None FS=0	1/UHABR 1/UHAB
H547 *	**AnSwitch5 C_Inp0** as for H535 PNU=60B Hex; Type= O2; Normalization: 1==1; Block diag.: [29.4]	0 to 180	Ind: None FS=0	1/UHABR 1/UHAB
H548 *	**AnSwitch5 C_Inp1** as for H536 PNU=60C Hex; Type= O2; Normalization: 1==1; Block diag.: [29.4]	0 to 180	Ind: None FS=0	1/UHABR 1/UHAB

Analog signal switch 6				**F860**
Function: Depending on the state of the binector selected in H549, the connector selected in H550 (with binector state = 0) or in H551 (with binector state = 1) is applied to the input of connector K146				
H549 *	**AnSwitch6 B_0/1** as for H534 PNU=60D Hex; Type= O2; Normalization: 1==1; Block diag.: [29.4]	0 to 200	Ind: None FS=0	1/UHABR 1/UHAB
H550 *	**AnSwitch6 C_Inp0** as for H535 PNU=60E Hex; Type= O2; Normalization: 1==1; Block diag.: [29.4]	0 to 180	Ind: None FS=0	1/UHABR 1/UHAB
H551 *	**AnSwitch6 C_Inp1** as for H536 PNU=60F Hex; Type= O2; Normalization: 1==1; Block diag.: [29.4]	0 to 180	Ind: None FS=0	1/UHABR 1/UHAB

Analog signal switch 7				**F1060**
Function: Depending on the state of the binector selected in H552, the connector selected in H553 (with binector state = 0) or in H554 (with binector state = 1) is applied to the input of connector K146				
H552 *	**AnSwitch7 B_0/1** as for H534 PNU=610 Hex; Type= O2; Normalization: 1==1; Block diag.: [29.4]	0 to 200	Ind: None FS=0	1/UHABR 1/UHAB
H553 *	**AnSwitch7 C_Inp0** as for H535 PNU=611 Hex; Type= O2; Normalization: 1==1; Block diag.: [29.4]	0 to 180	Ind: None FS=0	1/UHABR 1/UHAB
H554 *	**AnSwitch7 C_Inp1** as for H536 PNU=612 Hex; Type= O2; Normalization: 1==1; Block diag.: [29.4]	0 to 180	Ind: None FS=0	1/UHABR 1/UHAB

Analog signal switch 8				**F1130**
Function: Depending on the state of the binector selected in H555, the connector selected in H556 (with binector state = 0) or in H557 (with binector state = 1) is applied to the input of connector K148				
H555 *	**AnSwitch8 B_0/1** as for H534 PNU=613 Hex; Type= O2; Normalization: 1==1; Block diag.: [29.4]	0 to 200	Ind: None FS=0	1/UHABR 1/UHAB
H556 *	**AnSwitch8 C_Inp0** as for H535 PNU=614 Hex; Type= O2; Normalization: 1==1; Block diag.: [29.4]	0 to 180	Ind: None FS=0	1/UHABR 1/UHAB
H557 *	**AnSwitch8 C_Inp1** as for H536 PNU=615 Hex; Type= O2; Normalization: 1==1; Block diag.: [29.4]	0 to 180	Ind: None FS=0	1/UHABR 1/UHAB

Analog signal switch 9				**F1160**
Function: Depending on the state of the binector selected in H558, the connector selected in H559 (with binector state = 0) or in H560 (with binector state = 1) is applied to the input of connector K149				
H558 *	**AnSwitch9 B_0/1** as for H534 PNU=616 Hex; Type= O2; Normalization: 1==1; Block diag.: [29.6]	0 to 200	Ind: None FS=0	1/UHABR 1/UHAB
H559 *	**AnSwitch9 C_Inp0** as for H535 PNU=617 Hex; Type= O2; Normalization: 1==1; Block diag.: [29.6]	0 to 180	Ind: None FS=0	1/UHABR 1/UHAB
H560 *	**AnSwitch9 C_Inp1** as for H536 PNU=618 Hex; Type= O2; Normalization: 1==1; Block diag.: [29.6]	0 to 180	Ind: None FS=0	1/UHABR 1/UHAB

PNU *: Ack. par.	OP1 parameter name Description	Value range [unit] Selection text	No. of indices Factory setting	Read Write (Access / State)
Analog signal switch 10				**F1220**
Function: Depending on the state of the binector selected in H561, the connector selected in H562 (with binector state = 0) or in H563 (with binector state = 1) is applied to the input of connector K150				
H561 *****	**AnSwitch10 B_0/1** as for H534 PNU=619 Hex; Type= O2; Normalization: 1==1; Block diag.: [29.6]	0 to 200	Ind: None FS=0	1/UHABR 1/UHAB
H562 *****	**AnSwitch10C_Inp0** as for H535 PNU=61A Hex; Type= O2; Normalization: 1==1; Block diag.: [29.6]	0 to 180	Ind: None FS=0	1/UHABR 1/UHAB
H563 *****	**AnSwitch10C_Inp1** as for H536 PNU=61B Hex; Type= O2; Normalization: 1==1; Block diag.: [29.6]	0 to 180	Ind: None FS=0	1/UHABR 1/UHAB

Simple ramp-function generator (F900)

Notes: The output (y) is set to 0 when "Set ramp-generator output to zero" is selected and POWER ON
The output (y) is "frozen" at the current value when "Stop ramp-function generator" is selected
The ramp-up and ramp-down times are set to zero when "Bypass ramp-function generator" is selected
The output is applied to the input of connector K151.

Starting integrator:
The simple ramp-function generator contains a flip-flop. The output of this flip-flop is set to log. "0" (ramp-generator initial start) after "POWER ON" or after the generator has been enabled. When the generator output reaches the value of the input quantity (y=x) for the first time, the flip-flop output switches to log. "1" and remains in this state until the generator is next enabled. This output is linked to the input of binector B194. By setting H575=194, it is possible to connect this binector to the "Bypass ramp-function generator" function and thus to implement a starting integrator.

H570 *****	**SmpRFG C_Inp** Selection of connector to be injected as the **input quantity** (x) for the ramp-function generator 0 = Fixed value 0 1 = Fixed value 100 % 2 = Fixed value 0 3 = Connector K003 4 = Connector K004 etc. PNU=622 Hex; Type= O2; Normalization: 1==1; Block diag.: [30.1]	0 to 180	Ind: None FS=0	1/UHABR 1/UHAB
H571	**SmpRFG RU-Time_s** (ramp-up time) PNU=623 Hex; Type=O2; Normalization: 1==0.01 s; Block diag.: [30.3]	0.00 to 300.00 [s]	Ind: None FS=0.00	1/UHABR 1/UHABR
H572	**SmpRFG RD-Time_s** (ramp-down time) PNU=624 Hex; Type=O2; Normalization: 1==0.01 s; Block diag.: [30.3]	0.00 to 300.00 [s]	Ind: None FS=0.00	1/UHABR 1/UHABR
H573 *****	**SmpRFG B_Enable** Selection of binector to control "**Enable ramp-function generator**" 0 = Fixed value 0 (set generator output to zero) 1 = Fixed value 1 (enable ramp-function generator) 2 = Fixed value 0 (set generator output to zero) 3 = Binector B003 4 = Binector B004 etc. PNU=625 Hex; Type=O2; Normalization: 1==1; Block diag.: [30.1]	0 to 200	Ind: None FS=1	1/UHABR 1/UHAB
H574 *****	**SmpRFG B_Stop** Selection of binector to control "**Stop ramp-function generator**" 0 = Fixed value 0 1 = Fixed value 1 (ramp-generator stopped) 2 = Fixed value 0 3 = Binector B003 4 = Binector B004 etc. PNU=626 Hex; Type=O2; Normalization: 1==1; Block diag.: [30.1]	0 to 200	Ind: None FS=0	1/UHABR 1/UHAB

PNU *: Ack. par.	OP1 parameter name Description	Value range [unit] Selection text	No. of indices Factory setting	Read Write (Access / State)
H575 *	**SmpRFG B_Bypass** Selection of binector to control "**Bypass ramp-function generator**" 0 = Fixed value 0 1 = Fixed value 1 (ramp-generator bypassed) 2 = Fixed value 0 3 = Binector B003 4 = Binector B004 etc. PNU=627 Hex; Type=O2; Normalization: 1==1; Block diag.: [30.1]	0 to 200	Ind: None FS=0	1/UHABR 1/UHAB

Dead zone (F570)

Function:	The part of the input quantity (x) selected in H576 which has an absolute value in excess of the threshold for the dead zone (H577) is applied to the output (y). The output is applied to connector K152.			
H576 *	**DeadZ C_Input** Selection of connector which must be injected as the **input quantity** (x) 0 = Fixed value 0 1 = Fixed value 100 % 2 = Fixed value 0 3 = Connector K003 4 = Connector K004 etc. PNU=628 Hex; Type= O2; Normalization: 1==1; Block diag.: [30.1]	0 to 180	Ind: None FS=0	1/UHABR 1/UHAB
H577	**Dead Zone** PNU=629 Hex; Type=O2; Normalization: 1==0.01 %; Block diag.: [30.2]	0.00 to 100.00 [%]	Ind: None FS=0.00	1/UHABR 1/UHABR

Characteristic blocks (F760, F930, F1330)

Characteristic block 1 **F760**

Function: The shape of the characteristic can be defined in 10 points:
x values: H581.01 to .10
associated y values: H582.01 to .10

When x= -200.00% to x = value acc. to H581.01: y = value acc. to H582.01
When x = value acc. to H581.10 to x = 200.00%: y = value acc. to H582.10

The output (y) is applied to connector K153.

Note: The "distance" between any two adjacent x or y values must not be more than 199.99 % or else the desired characteristic shape will not be obtained.

H580 *	**Charact1 C_Inp.** Selection of connector which must be injected as the **input quantity** (x) 0 = Fixed value 0 1 = Fixed value 100 % 2 = Fixed value 0 3 = Connector K003 4 = Connector K004 etc. PNU=62C Hex; Type= O2; Normalization: 1==1; Block diag.: [30.6]	0 to 180	Ind: None FS=0	1/UHABR 1/UHAB
H581	**Charact1 xValues** (x values) i01: 1st curve point i02: 2nd curve point **...** i10: 10th curve point PNU=62D Hex; Type= I2; Normalization: 1==0.01 %; Block diag.: [30.7]	-200.00 to 199.99 [%]	Ind: 10 FS=0.00	1/UHABR 1/UHABR

PNU *: Ack. par.	OP1 parameter name Description	Value range [unit] Selection text	No. of indices Factory setting	Read Write (Access / State)
H582	**Charact1 yValues** (y values) i01: 1st curve point i02: 2nd curve point **...** i10: 10th curve point PNU=62E Hex; Type= I2; Normalization: 1==0.01 %; Block diag.: [30.7]	-200.00 to 199.99 [%]	Ind: 10 FS=0.00	1/UHABR 1/UHABR

Characteristic block 2 **F930**

Function: The shape of the characteristic can be defined in 10 points:
x values: H584.01 to .10
associated y values: H585.01 to .10

When x= -200.00% to x = value acc. to H584.01: y = value acc. to H585.01
When x = value acc. to H584.10 to x = 200.00%: y = value acc. to H585.10

The output (y) is applied to connector K154.

Note: The "distance" between any two adjacent x or y values must not be more than 199.99 % or else the desired characteristic shape will not be obtained.

H583 *	**Charact2 C_Inp.** as for H580 PNU=62F Hex; Type= O2; Normalization: 1==1; Block diag.: [30.6]	0 to 180	Ind: None FS=0	1/UHABR 1/UHAB
H584	**Charact2 xValues** as for H581 PNU=630 Hex; Type= I2; Normalization: 1==0.01 %; Block diag.: [30.7]	-200.00 to 199.99 [%]	Ind: 10 FS=0.00	1/UHABR 1/UHABR
H585	**Charact2 yValues** as for H582 PNU=631 Hex; Type= I2; Normalization: 1==0.01 %; Block diag.: [30.7]	-200.00 to 199.99 [%]	Ind: 10 FS=0.00	1/UHABR 1/UHABR

Characteristic block 3 **F1330**

Function: The shape of the characteristic can be defined in 10 points:
x values: H587.01 to .10
associated y values: H588.01 to .10

When x= -200.00% to x = value acc. to H587.01: y = value acc. to H588.01
When x = value acc. to H587.10 to x = 200.00%: y = value acc. to H588.10

The output (y) is applied to connector K155.

Note: The "distance" between any two adjacent x or y values must not be more than 199.99 % or else the desired characteristic shape will not be obtained.

H586 *	**Charact3 C_Inp.** as for H580 PNU=632 Hex; Type= O2; Normalization: 1==1; Block diag.: [30.6]	0 to 180	Ind: None FS=0	1/UHABR 1/UHAB
H587	**Charact3 xValues** as for H581 PNU=633 Hex; Type= I2; Normalization: 1==0.01 %; Block diag.: [30.7]	-200.00 to 199.99 [%]	Ind: 10 FS=0.00	1/UHABR 1/UHABR
H588	**Charact3 yValues** as for H582 PNU=634 Hex; Type= I2; Normalization: 1==0.01 %; Block diag.: [30.7]	-200.00 to 199.99 [%]	Ind: 10 FS=0.00	1/UHABR 1/UHABR

PNU *: Ack. par.	OP1 parameter name Description	Value range [unit] Selection text	No. of indices Factory setting	Read Write (Access / State)

Logic functions

AND gate with 3 inputs (1) (output = B125)				F500
H590 *	**AND1 B_Inp 1-3** Selection of binector which must be applied to the appropriate input of the AND gate i01: Selection for AND gate, input 1 i02: Selection for AND gate, input 2 i03: Selection for AND gate, input 3 Settings: 0 = Fixed value 0 1 = Fixed value 1 2 = Fixed value 0 3 = Binector B003 4 = Binector B004 etc. PNU=636 Hex; Type=O2; Normalization: 1==1; Block diag.: [32.1]	0 to 200	Ind: 3 FS=1	1/UHABR 1/UHAB

AND gate with 3 inputs (2) (output = B126)				F600
H591 *	**AND2 B_Inp 1-3** as for H590 PNU=637 Hex; Type=O2; Normalization: 1==1; Block diag.: [32.1]	0 to 200	Ind: 3 FS=1	1/UHABR 1/UHAB

AND gate with 3 inputs (3) (output = B127)				F690
H592 *	**AND3 B_Inp 1-3** as for H590 PNU=638 Hex; Type=O2; Normalization: 1==1; Block diag.: [32.1]	0 to 200	Ind: 3 FS=1	1/UHABR 1/UHAB

AND gate with 3 inputs (4) (output = B128)				F770
H593 *	**AND4 B_Inp 1-3** as for H590 PNU=639 Hex; Type=O2; Normalization: 1==1; Block diag.: [32.1]	0 to 200	Ind: 3 FS=1	1/UHABR 1/UHAB

AND gate with 3 inputs (5) (output = B129)				F850
H594 *	**AND5 B_Inp 1-3** as for H590 PNU=63A Hex; Type=O2; Normalization: 1==1; Block diag.: [32.1]	0 to 200	Ind: 3 FS=1	1/UHABR 1/UHAB

AND gate with 3 inputs (6) (output = B130)				F870
H595 *	**AND6 B_Inp 1-3** as for H590 PNU=63B Hex; Type=O2; Normalization: 1==1; Block diag.: [32.1]	0 to 200	Ind: 3 FS=1	1/UHABR 1/UHAB

AND gate with 3 inputs (7) (output = B131)				F980
H596 *	**AND7 B_Inp 1-3** as for H590 PNU=63C Hex; Type=O2; Normalization: 1==1; Block diag.: [32.1]	0 to 200	Ind: 3 FS=1	1/UHABR 1/UHAB

AND gate with 3 inputs (8) (output = B132)				F1050
H597 *	**AND8 B_Inp 1-3** as for H590 PNU=63D Hex; Type=O2; Normalization: 1==1; Block diag.: [32.1]	0 to 200	Ind: 3 FS=1	1/UHABR 1/UHAB

AND gate with 3 inputs (9) (output = B133)				F1100
H598 *	**AND9 B_Inp 1-3** as for H590 PNU=63E Hex; Type=O2; Normalization: 1==1; Block diag.: [32.3]	0 to 200	Ind: 3 FS=1	1/UHABR 1/UHAB

AND gate with 3 inputs (10) (output = B134)				F1180
H599 *	**AND10 B_Inp 1-3** as for H590 PNU=63F Hex; Type=O2; Normalization: 1==1; Block diag.: [32.3]	0 to 200	Ind: 3 FS=1	1/UHABR 1/UHAB

PNU *: Ack. par.	OP1 parameter name Description	Value range [unit] Selection text	No. of indices Factory setting	Read Write (Access / State)
AND gate with 3 inputs (11) (output = B135)				**F1210**
H600 *****	**AND11 B_Inp 1-3** as for H590 PNU=640 Hex; Type=O2; Normalization: 1==1; Block diag.: [32.3]	0 to 200	Ind: 3 FS=1	1/UHABR 1/UHAB
AND gate with 3 inputs (12) (output = B136)				**F1420**
H601 *****	**AND12 B_Inp 1-3** as for H590 PNU=641 Hex; Type=O2; Normalization: 1==1; Block diag.: [32.3]	0 to 200	Ind: 3 FS=1	1/UHABR 1/UHAB
AND gate with 3 inputs (13) (output = B137)				**F1490**
H602 *****	**AND13 B_Inp 1-3** as for H590 PNU=642 Hex; Type=O2; Normalization: 1==1; Block diag.: [32.3]	0 to 200	Ind: 3 FS=1	1/UHABR 1/UHAB
AND gate with 3 inputs (14) (output = B138)				**F1510**
H603 *****	**AND14 B_Inp 1-3** as for H590 PNU=643 Hex; Type=O2; Normalization: 1==1; Block diag.: [32.3]	0 to 200	Ind: 3 FS=1	1/UHABR 1/UHAB
AND gate with 3 inputs (15) (output = B139)				**F1550**
H604 *****	**AND15 B_Inp 1-3** as for H590 PNU=644 Hex; Type=O2; Normalization: 1==1; Block diag.: [32.3]	0 to 200	Ind: 3 FS=1	1/UHABR 1/UHAB
AND gate with 3 inputs (16) (output = B140)				**F1570**
H605 *****	**AND16 B_Inp 1-3** as for H590 PNU=645 Hex; Type=O2; Normalization: 1==1; Block diag.: [32.3]	0 to 200	Ind: 3 FS=1	1/UHABR 1/UHAB
OR gate with 3 inputs (1) (output = B141)				**F510**
H606 *****	**OR1 B_Inp 1-3** Selection of binector which must be applied to the appropriate input of the OR gate i01: Selection for OR gate, input 1 i02: Selection for OR gate, input 2 i03: Selection for OR gate, input 3 Settings: 0 = Fixed value 0 1 = Fixed value 1 2 = Fixed value 0 3 = Binector B003 4 = Binector B004 etc. PNU=646 Hex; Type=O2; Normalization: 1==1; Block diag.: [32.6]	0 to 200	Ind: 3 FS=0	1/UHABR 1/UHAB
OR gate with 3 inputs (2) (output = B142)				**F610**
H607 *****	**OR2 B_Inp 1-3** as for H606 PNU=647 Hex; Type=O2; Normalization: 1==1; Block diag.: [32.6]	0 to 200	Ind: 3 FS=0	1/UHABR 1/UHAB
OR gate with 3 inputs (3) (output = B143)				**F790**
H608 *****	**OR3 B_Inp 1-3** as for H606 PNU=648 Hex; Type=O2; Normalization: 1==1; Block diag.: [32.6]	0 to 200	Ind: 3 FS=0	1/UHABR 1/UHAB
OR gate with 3 inputs (4) (output = B144)				**F990**
H609 *****	**OR4 B_Inp 1-3** as for H606 PNU=649 Hex; Type=O2; Normalization: 1==1; Block diag.: [32.6]	0 to 200	Ind: 3 FS=0	1/UHABR 1/UHAB

PNU *: Ack. par.	OP1 parameter name Description	Value range [unit] Selection text	No. of indices Factory setting	Read Write (Access / State)
OR gate with 3 inputs (5) (output = B145)				**F1260**
H610 *	**OR5 B_Inp 1-3** as for H606 PNU=64A Hex; Type=O2; Normalization: 1==1; Block diag.: [32.6]	0 to 200	Ind: 3 FS=0	1/UHABR 1/UHAB
OR gate with 3 inputs (6) (output = B146)				**F1340**
H611 *	**OR6 B_Inp 1-3** as for H606 PNU=64B Hex; Type=O2; Normalization: 1==1; Block diag.: [32.6]	0 to 200	Ind: 3 FS=0	1/UHABR 1/UHAB
OR gate with 3 inputs (7) (output = B147)				**F1360**
H612 *	**OR7 B_Inp 1-3** as for H606 PNU=64C Hex; Type=O2; Normalization: 1==1; Block diag.: [32.6]	0 to 200	Ind: 3 FS=0	1/UHABR 1/UHAB
OR gate with 3 inputs (8) (output = B148)				**F1500**
H613 *	**OR8 B_Inp 1-3** as for H606 PNU=64D Hex; Type=O2; Normalization: 1==1; Block diag.: [32.6]	0 to 200	Ind: 3 FS=0	1/UHABR 1/UHAB
Inverter 1 (output = B149)				**F660**
H614 *	**INV1 B_Inp** Selection of binector which must be inverted 0 = Fixed value 0 1 = Fixed value 1 2 = Fixed value 0 3 = Binector B003 4 = Binector B004 etc. PNU=64E Hex; Type=O2; Normalization: 1==1; Block diag.: [33.1]	0 to 200	Ind: None FS=0	1/UHABR 1/UHAB
Inverter 2 (output = B150)				**F700**
H615 *	**INV2 B_Inp** as for H614 PNU=64F Hex; Type=O2; Normalization: 1==1; Block diag.: [33.1]	0 to 200	Ind: None FS=0	1/UHABR 1/UHAB
Inverter 3 (output = B151)				**F710**
H616 *	**INV3 B_Inp** as for H614 PNU=650 Hex; Type=O2; Normalization: 1==1; Block diag.: [33.1]	0 to 200	Ind: None FS=0	1/UHABR 1/UHAB
Inverter 4 (output = B152)				**F890**
H617 *	**INV4 B_Inp** as for H614 PNU=651 Hex; Type=O2; Normalization: 1==1; Block diag.: [33.1]	0 to 200	Ind: None FS=0	1/UHABR 1/UHAB
Inverter 5 (output = B153)				**F970**
H618 *	**INV5 B_Inp** as for H614 PNU=652 Hex; Type=O2; Normalization: 1==1; Block diag.: [33.1]	0 to 200	Ind: None FS=0	1/UHABR 1/UHAB
Inverter 6 (output = B154)				**F1090**
H619 *	**INV6 B_Inp** as for H614 PNU=653 Hex; Type=O2; Normalization: 1==1; Block diag.: [33.1]	0 to 200	Ind: None FS=0	1/UHABR 1/UHAB
Inverter 7 (output = B155)				**F1520**
H620 *	**INV7 B_Inp** as for H614 PNU=654 Hex; Type=O2; Normalization: 1==1; Block diag.: [33.1]	0 to 200	Ind: None FS=0	1/UHABR 1/UHAB
Inverter 8 (output = B156)				**F1560**
H621 *	**INV8 B_Inp** as for H614 PNU=655 Hex; Type=O2; Normalization: 1==1; Block diag.: [33.1]	0 to 200	Ind: None FS=0	1/UHABR 1/UHAB

PNU *: Ack. par.	OP1 parameter name Description	Value range [unit] Selection text	No. of indices Factory setting	Read Write (Access / State)
EXCLUSIVE-OR gate with 2 inputs (1) (output = B157)				**F520**
H622 *****	**EXOR1 B_Inp 1-2** Selection of binector which must be applied to the appropriate input of the EXCLUSIVE-OR gate i01: Selection for EXCLUSIVE-OR gate, input 1 i02: Selection for EXCLUSIVE-OR gate, input 2 Settings: 0 = Fixed value 0 1 = Fixed value 1 2 = Fixed value 0 3 = Binector B003 4 = Binector B004 etc. PNU=656 Hex; Type=O2; Normalization: 1==1; Block diag.: [33.4]	0 to 200	Ind: 2 FS=0	1/UHABR 1/UHAB
EXCLUSIVE-OR gate with 2 inputs (2) (output = B158)				**F620**
H623 *****	**EXOR2 B_Inp 1-2** as for H622 PNU=657 Hex; Type=O2; Normalization: 1==1; Block diag.: [33.4]	0 to 200	Ind: 2 FS=0	1/UHABR 1/UHAB
EXCLUSIVE-OR gate with 2 inputs (3) (output = B159)				**F1410**
H624 *****	**EXOR3 B_Inp 1-2** as for H622 PNU=658 Hex; Type=O2; Normalization: 1==1; Block diag.: [33.4]	0 to 200	Ind: 2 FS=0	1/UHABR 1/UHAB
NAND gate with 3 inputs (1) (output = B160)				**F540**
H625 *****	**NAND1 B_Inp 1-3** Selection of binector which must be applied to the appropriate input of the NAND gate i01: Selection for NAND gate, input 1 i02: Selection for NAND gate, input 2 i03: Selection for NAND gate, input 3 Settings: 0 = Fixed value 0 1 = Fixed value 1 2 = Fixed value 0 3 = Binector B003 4 = Binector B004 etc. PNU=659 Hex; Type=O2; Normalization: 1==1; Block diag.: [33.7]	0 to 200	Ind: 3 FS=1	1/UHABR 1/UHAB
NAND gate with 3 inputs (2) (output = B161)				**F800**
H626 *****	**NAND2 B_Inp 1-3** as for H625 PNU=65A Hex; Type=O2; Normalization: 1==1; Block diag.: [33.7]	0 to 200	Ind: 3 FS=1	1/UHABR 1/UHAB
NAND gate with 3 inputs (3) (output = B162)				**F1040**
H627 *****	**NAND3 B_Inp 1-3** as for H625 PNU=65B Hex; Type=O2; Normalization: 1==1; Block diag.: [33.7]	0 to 200	Ind: 3 FS=1	1/UHABR 1/UHAB
NAND gate with 3 inputs (4) (output = B163)				**F1250**
H628 *****	**NAND4 B_Inp 1-3** as for H625 PNU=65C Hex; Type=O2; Normalization: 1==1; Block diag.: [33.7]	0 to 200	Ind: 3 FS=1	1/UHABR 1/UHAB
NAND gate with 3 inputs (5) (output = B164)				**F1350**
H629 *****	**NAND5 B_Inp 1-3** as for H625 PNU=65D Hex; Type=O2; Normalization: 1==1; Block diag.: [33.7]	0 to 200	Ind: 3 FS=1	1/UHABR 1/UHAB

PNU *: Ack. par.	OP1 parameter name Description	Value range [unit] Selection text	No. of indices Factory setting	Read Write (Access / State)
NAND gate with 3 inputs (6) (output = B165)				**F1480**
H630 *	**NAND6 B_Inp 1-3** as for H625 PNU=65E Hex; Type=O2; Normalization: 1==1; Block diag.: [33.7]	0 to 200	Ind: 3 FS=1	1/UHABR 1/UHAB

RS flipflops (F880, F940, F1120, F1270, F1300, F1430, F1440)

RS flipflop 1				**F880**
Function: RS flipflop with SET (Q=1) and RESET (Q=0) (priority: 1. RESET. 2. SET). RESET state is assumed after POWER ON. Outputs: Q = B166. $\overline{Q}$ = B167				
H631 *	**RS-FlFl1 B_SET** Selection of binector which must be applied to the SET input of the RS flipflop 0 = Fixed value 0 1 = Fixed value 1 2 = Fixed value 0 3 = Binector B003 4 = Binector B004 etc. PNU=65F Hex; Type=O2; Normalization: 1==1; Block diag.: [34.1]	0 to 200	Ind: None FS=0	1/UHABR 1/UHAB
H632 *	**RS-FlFl1 B_RESET** Selection of binector which must be applied to the RESET input of the RS flipflop 0 = Fixed value 0 1 = Fixed value 1 2 = Fixed value 0 3 = Binector B003 4 = Binector B004 etc. PNU=660 Hex; Type=O2; Normalization: 1==1; Block diag.: [34.1]	0 to 200	Ind: None FS=0	1/UHABR 1/UHAB

RS flipflop 2				**F940**
Function: RS flipflop with SET (Q=1) and RESET (Q=0) (priority: 1. RESET. 2. SET). RESET state is assumed after POWER ON. Outputs: Q = B168. $\overline{Q}$ = B169				
H633 *	**RS-FlFl2 B_SET** as for H631 PNU=661 Hex; Type=O2; Normalization: 1==1; Block diag.: [34.1]	0 to 200	Ind: None FS=0	1/UHABR 1/UHAB
H634 *	**RS-FlFl2 B_RESET** as for H632 PNU=662 Hex; Type=O2; Normalization: 1==1; Block diag.: [34.1]	0 to 200	Ind: None FS=0	1/UHABR 1/UHAB

RS flipflop 3				**F1120**
Function: RS flipflop with SET (Q=1) and RESET (Q=0) (priority: 1. RESET. 2. SET). RESET state is assumed after POWER ON. Outputs: Q = B170. $\overline{Q}$ = B171				
H635 *	**RS-FlFl3 B_SET** as for H631 PNU=663 Hex; Type=O2; Normalization: 1==1; Block diag.: [34.1]	0 to 200	Ind: None FS=0	1/UHABR 1/UHAB
H636 *	**RS-FlFl3 B_RESET** as for H632 PNU=664 Hex; Type=O2; Normalization: 1==1; Block diag.: [34.1]	0 to 200	Ind: None FS=0	1/UHABR 1/UHAB

RS flipflop 4				**F1270**
Function: RS flipflop with SET (Q=1) and RESET (Q=0) (priority: 1. RESET. 2. SET). RESET state is assumed after POWER ON. Outputs: Q = B172. $\overline{Q}$ = B173				
H637 *	**RS-FlFl4 B_SET** as for H631 PNU=665 Hex; Type=O2; Normalization: 1==1; Block diag.: [34.3]	0 to 200	Ind: None FS=0	1/UHABR 1/UHAB
H638 *	**RS-FlFl4 B_RESET** as for H632 PNU=666 Hex; Type=O2; Normalization: 1==1; Block diag.: [34.3]	0 to 200	Ind: None FS=0	1/UHABR 1/UHAB

PNU *: Ack. par.	OP1 parameter name Description	Value range [unit] Selection text	No. of indices Factory setting	Read Write (Access / State)
RS flipflop 5				**F1300**
Function: RS flipflop with SET (Q=1) and RESET (Q=0) (priority: 1. RESET. 2. SET). RESET state is assumed after POWER ON. Outputs: Q = B174. $\overline{Q}$ = B175				
H639 *****	**RS-FIFI5 B_SET** as for H631 PNU=667 Hex; Type=O2; Normalization: 1==1; Block diag.: [34.3]	0 to 200	Ind: None FS=0	1/UHABR 1/UHAB
H640 *****	**RS-FIFI5 B_RESET** as for H632 PNU=668 Hex; Type=O2; Normalization: 1==1; Block diag.: [34.3]	0 to 200	Ind: None FS=0	1/UHABR 1/UHAB

RS flipflop 6				**F1430**
Function: RS flipflop with SET (Q=1) and RESET (Q=0) (priority: 1. RESET. 2. SET). RESET state is assumed after POWER ON. Outputs: Q = B176. $\overline{Q}$ = B177				
H641 *****	**RS-FIFI6 B_SET** as for H631 PNU=669 Hex; Type=O2; Normalization: 1==1; Block diag.: [34.3]	0 to 200	Ind: None FS=0	1/UHABR 1/UHAB
H642 *****	**RS-FIFI6 B_RESET** as for H632 PNU=66A Hex; Type=O2; Normalization: 1==1; Block diag.: [34.3]	0 to 200	Ind: None FS=0	1/UHABR 1/UHAB

RS flipflop 7				**F1440**
Function: RS flipflop with SET (Q=1) and RESET (Q=0) (priority: 1. RESET. 2. SET). RESET state is assumed after POWER ON. Outputs: Q = B178. $\overline{Q}$ = B179				
H643 *****	**RS-FIFI7 B_SET** as for H631 PNU=66B Hex; Type=O2; Normalization: 1==1; Block diag.: [34.5]	0 to 200	Ind: None FS=0	1/UHABR 1/UHAB
H644 *****	**RS-FIFI7 B_RESET** as for H632 PNU=66C Hex; Type=O2; Normalization: 1==1; Block diag.: [34.5]	0 to 200	Ind: None FS=0	1/UHABR 1/UHAB

D flipflops (F820, F1280)

D flipflop 1				**F820**
Function: D flipflop with RESET (Q=0), SET (Q=D) and STORE (Q=D on transition from 0 to 1) (priority: 1. RESET. 2. SET. 3. STORE). RESET state is assumed after POWER ON. Outputs: Q = B180. $\overline{Q}$ = B181				
H645 *****	**D-FIFI1 B_DINP** Selection of binector to be applied to input D 0 = Fixed value 0 1 = Fixed value 1 2 = Fixed value 0 3 = Binector B003 4 = Binector B004 etc. PNU=66D Hex; Type= O2; Normalization: 1==1; Block diag.: [34.7]	0 to 200	Ind: None FS=0	1/UHABR 1/UHAB
H646 *****	**D-FIFI1 B_RESET** Selection of binector to control the RESET function 0 = Fixed value 0 1 = Fixed value 1 2 = Fixed value 0 3 = Binector B003 4 = Binector B004 etc. PNU=66E Hex; Type= O2; Normalization: 1==1; Block diag.: [34.7]	0 to 200	Ind: None FS=0	1/UHABR 1/UHAB

PNU *: Ack. par.	OP1 parameter name Description	Value range [unit] Selection text	No. of indices Factory setting	Read Write (Access / State)
H647 *	**D-FIFl1 B_SET** Selection of binector to control the SET function 0 = Fixed value 0 1 = Fixed value 1 2 = Fixed value 0 3 = Binector B003 4 = Binector B004 etc. PNU=66F Hex; Type= O2; Normalization: 1==1; Block diag.: [34.7]	0 to 200	Ind: None FS=0	1/UHABR 1/UHAB
H648 *	**D-FIFl1 B_STORE** Selection of binector to control the STORE function 0 = Fixed value 0 1 = Fixed value 1 2 = Fixed value 0 3 = Binector B003 4 = Binector B004 etc. PNU=670 Hex; Type= O2; Normalization: 1==1; Block diag.: [34.7]	0 to 200	Ind: None FS=0	1/UHABR 1/UHAB

D flipflop 2				**F1280**
Function:	D flipflop with RESET (Q=0). SET (Q=D) and STORE (Q=D on transition from 0 to 1) (priority: 1. RESET. 2. SET. 3. STORE). RESET state is assumed after POWER ON. Outputs: Q = B182. $\overline{Q}$ = B183			
H649 *	**D-FIFl2 B_DINP** as for H645 PNU=671 Hex; Type= O2; Normalization: 1==1; Block diag.: [34.7]	0 to 200	Ind: None FS=0	1/UHABR 1/UHAB
H650 *	**D-FIFl2 B_RESET** as for H646 PNU=672 Hex; Type= O2; Normalization: 1==1; Block diag.: [34.7]	0 to 200	Ind: None FS=0	1/UHABR 1/UHAB
H651 *	**D-FIFl2 B_SET** as for H647 PNU=673 Hex; Type= O2; Normalization: 1==1; Block diag.: [34.7]	0 to 200	Ind: None FS=0	1/UHABR 1/UHAB
H652 *	**D-FIFl2 B_STORE** as for H648 PNU=674 Hex; Type= O2; Normalization: 1==1; Block diag.: [34.7]	0 to 200	Ind: None FS=0	1/UHABR 1/UHAB

Timers (F530, F1110, F1170, F1200, F1290)

Timer 1 (output = B184)				**F530**
H660 *	**Timer1 B_Input** Selection of binector to be applied to the input 0 = Fixed value 0 1 = Fixed value 1 2 = Fixed value 0 3 = Binector B003 4 = Binector B004 etc. PNU=67C Hex; Type= O2; Normalization: 1==1; Block diag.: [35.1]	0 to 200	Ind: None FS=0	1/UHABR 1/UHAB
H661	**Timer1 Time_s** (time) PNU=67D Hex; Type=O2; Normalization: 1==0.01 s; Block diag.: [35.2]	0.00 to 600.00 [s]	Ind: None FS=0.00	1/UHABR 1/UHABR

PNU *: Ack. par.	OP1 parameter name Description	Value range [unit] Selection text	No. of indices Factory setting	Read Write (Access / State)
H662 *	**Timer1 Mode** Selection of mode for timer 0 = ON delay 1 = ON delay, output signal inverted 2 = OFF delay 3 = OFF delay, output signal inverted 4 = ON/OFF delay 5 = ON/OFF delay, output signal inverted 6 = Pulse generator with positive edge triggering 7 = Pulse generator with positive edge triggering, output signal inverted PNU=67E Hex; Type=O2; Normalization: 1==1; Block diag.: [35.2]	0 to 7 ONdly Q ONdly /Q OFFdly Q OFFdly /Q ON/OFFdly Q ON/OFFdl /Q Monofl Q Monofl /Q	Ind: None FS=0	1/UHABR 1/UHAB

Timer 2 (output = B185)				**F1110**
H663 *	**Timer2 B_Input** as for H660 PNU=67F Hex; Type= O2; Normalization: 1==1; Block diag.: [35.3]	0 to 200	Ind: None FS=0	1/UHABR 1/UHAB
H664	**Timer2 Time_s** (time) PNU=680 Hex; Type=O2; Normalization: 1==0.001 s; Block diag.: [35.4]	0.000 to 60.000 [s]	Ind: None FS=0.000	1/UHABR 1/UHABR
H665 *	**Timer2 Mode** as for H662 PNU=681 Hex; Type=O2; Normalization: 1==1; Block diag.: [35.5]	0 to 7	Ind: None FS=0	1/UHABR 1/UHAB

Timer 3 (output = B186)				**F1170**
H666 *	**Timer3 B_Input** as for H660 PNU=682 Hex; Type= O2; Normalization: 1==1; Block diag.: [35.6]	0 to 200	Ind: None FS=0	1/UHABR 1/UHAB
H667	**Timer3 Time_s** (time) PNU=683 Hex; Type=O2; Normalization: 1==0.01 s; Block diag.: [35.7]	0.00 to 600.00 [s]	Ind: None FS=0.00	1/UHABR 1/UHABR
H668 *	**Timer3 Mode** as for H662 PNU=684 Hex; Type=O2; Normalization: 1==1; Block diag.: [35.7]	0 to 7	Ind: None FS=0	1/UHABR 1/UHAB

Timer 4 (output = B187)				**F1200**
H669 *	**Timer4 B_Input** as for H660 PNU=685 Hex; Type= O2; Normalization: 1==1; Block diag.: [35.1]	0 to 200	Ind: None FS=0	1/UHABR 1/UHAB
H670	**Timer4 Time_s** (time) PNU=686 Hex; Type=O2; Normalization: 1==0.01 s; Block diag.: [35.2]	0.00 to 600.00 [s]	Ind: None FS=0.00	1/UHABR 1/UHABR
H671 *	**Timer4 Mode** as for H662 PNU=687 Hex; Type=O2; Normalization: 1==1; Block diag.: [35.2]	0 to 7	Ind: None FS=0	1/UHABR 1/UHAB

Timer 5 (output = B188)				**F1290**
H672 *	**Timer5 B_Input** as for H660 PNU=688 Hex; Type= O2; Normalization: 1==1; Block diag.: [35.3]	0 to 200	Ind: None FS=0	1/UHABR 1/UHAB
H673	**Timer5 Time_s** (time) PNU=689 Hex; Type=O2; Normalization: 1==0.001 s; Block diag.: [35.4]	0.000 to 60.000 [s]	Ind: None FS=0.000	1/UHABR 1/UHABR
H674 *	**Timer5 Mode** as for H662 PNU=68A Hex; Type=O2; Normalization: 1==1; Block diag.: [35.5]	0 to 7	Ind: None FS=0	1/UHABR 1/UHAB

PNU *: Ack. par.	OP1 parameter name Description	Value range [unit] Selection text	No. of indices Factory setting	Read Write (Access / State)

Binary signal switches (F560, F630, F1000, F1140)

Binary signal switch 1				**F560**
Function: Depending on the state of the (switching) binector selected in H675, the binector selected in H676 (with binector state = 0) or in H677 (with binector state = 1) is applied to the output (binector B189)				
H675 *****	**BiSwit1 B_0/1** Selection of binector to control the switchover operation (switching binector). 0 = Fixed value 0 1 = Fixed value 1 2 = Fixed value 0 3 = Binector B003 4 = Binector B004 etc. PNU=68B Hex; Type= O2; Normalization: 1==1; Block diag.: [35.1]	0 to 200	Ind: None FS=0	1/UHABR 1/UHAB
H676 *****	**BiSwit1 B_Inp0** Selection of binector to be injected as the input quantity when switching binector = 0 0 = Fixed value 0 1 = Fixed value 1 2 = Fixed value 0 3 = Binector B003 4 = Binector B004 etc. PNU=68C Hex; Type= O2; Normalization: 1==1; Block diag.: [35.1]	0 to 200	Ind: None FS=0	1/UHABR 1/UHAB
H677 *****	**BiSwit1 B_Inp1** Selection of binector to be injected as the input quantity when switching binector = 1 0 = Fixed value 0 1 = Fixed value 1 2 = Fixed value 0 3 = Binector B003 4 = Binector B004 etc. PNU=68D Hex; Type= O2; Normalization: 1==1; Block diag.: [35.1]	0 to 200	Ind: None FS=0	1/UHABR 1/UHAB

Binary signal switch 2				**F630**
Function: Depending on the state of the (switching) binector selected in H678, the binector selected in H679 (with binector state = 0) or in H680 (with binector state = 1) is applied to the output (binector B190)				
H678 *****	**BiSwit2 B_0/1** as for H675 PNU=68E Hex; Type= O2; Normalization: 1==1; Block diag.: [35.3]	0 to 200	Ind: None FS=0	1/UHABR 1/UHAB
H679 *****	**BiSwit2 B_Inp0** as for H676 PNU=68F Hex; Type= O2; Normalization: 1==1; Block diag.: [35.3]	0 to 200	Ind: None FS=0	1/UHABR 1/UHAB
H680 *****	**BiSwit2 B_Inp1** as for H677 PNU=690 Hex; Type= O2; Normalization: 1==1; Block diag.: [35.3]	0 to 200	Ind: None FS=0	1/UHABR 1/UHAB

Binary signal switch 3				**F1000**
Function: Depending on the state of the (switching) binector selected in H681, the binector selected in H682 (with binector state = 0) or in H683 (with binector state = 1) is applied to the output (binector B191)				
H681 *****	**BiSwit3 B_0/1** as for H675 PNU=691 Hex; Type= O2; Normalization: 1==1; Block diag.: [35.5]	0 to 200	Ind: None FS=0	1/UHABR 1/UHAB
H682 *****	**BiSwit3 B_Inp0** as for H676 PNU=692 Hex; Type= O2; Normalization: 1==1; Block diag.: [35.5]	0 to 200	Ind: None FS=0	1/UHABR 1/UHAB
H683 *****	**BiSwit3 B_Inp1** as for H677 PNU=693 Hex; Type= O2; Normalization: 1==1; Block diag.: [35.5]	0 to 200	Ind: None FS=0	1/UHABR 1/UHAB

PNU *: Ack. par.	OP1 parameter name Description	Value range [unit] Selection text	No. of indices Factory setting	Read Write (Access / State)

Binary signal switch 4				**F1140**
Function: Depending on the state of the (switching) binector selected in H684, the binector selected in H685 (with binector state = 0) or in H686 (with binector state = 1) is applied to the output (binector B192)				
H684 *****	**BiSwit4 B_0/1** as for H675 PNU=694 Hex; Type= O2; Normalization: 1==1; Block diag.: [35.6]	0 to 200	Ind: None FS=0	1/UHABR 1/UHAB
H685 *****	**BiSwit4 B_Inp0** as for H676 PNU=695 Hex; Type= O2; Normalization: 1==1; Block diag.: [35.6]	0 to 200	Ind: None FS=0	1/UHABR 1/UHAB
H686 *****	**BiSwit4 B_Inp1** as for H677 PNU=696 Hex; Type= O2; Normalization: 1==1; Block diag.: [35.6]	0 to 200	Ind: None FS=0	1/UHABR 1/UHAB

Velocity/speed calculators (B50, F1230)

Speed/velocity calculator				**B50**
Function: $v_act = \frac{D * \pi * n_rated}{i} * \frac{n_act}{100\%}$ v_act Actual velocity (→ K156) D Diameter (H693) n_rated Rated speed (H694) i Gear ratio (H692) n_act Actual speed (H690)				
H690 *****	**n>v_Calc C_nact** Selection of connector which must be injected as the **actual speed** (n_act) 0 = Fixed value 0 1 = Fixed value 100 % 2 = Fixed value 0 3 = Connector K003 4 = Connector K004 etc. PNU=69A Hex; Type=O2; Normalization: 1==1; Block diag.: [31.2]	0 to 180	Ind: None FS=0	1/UHABR 1/UHAB

Velocity/speed calculator				**F1230**
Function: $n_set = \frac{v_set * i}{D * \pi * n_rated} * 100\%$ n_set Setpoint speed (→ K157) D Diameter (H693) n_rated Rated speed (H694) i Gear ratio (H692) v_set Setpoint velocity (H691)				
H691 *****	**n>v_Calc C_vset** Selection of connector which must be injected as the **setpoint velocity** (v_set) 0 = Fixed value 0 1 = Fixed value 100 % 2 = Fixed value 0 3 = Connector K003 4 = Connector K004 etc. PNU=69B Hex; Type=O2; Normalization: 1==1; Block diag.: [31.2]	0 to 180	Ind: None FS=0	1/UHABR 1/UHAB

Note: Parameters H692 to H694 are included in the switchover parameter set; they each have four different datasets which can be selected by means of the parameter set switchover function				
H692	**v-n_Calc i g-rat** (gear ratio) PNU=69C Hex; Type=O2; Normalization: 1==0.01; Block diag.: [31.4]	1.00 to 300.00	Ind: 4 FS=1.00	1/UHABR 1/UHABR

PNU *: Ack. par.	OP1 parameter name Description	Value range [unit] Selection text	No. of indices Factory setting	Read Write (Access / State)
H693	**n>v_Calc Diam** (diameter) PNU=69D Hex; Type=O2; Normalization: 1==0.1 mm; Block diag.: [31.5]	10.0 to 3200.0 [mm]	Ind: 4 FS=216.0	1/UHABR 1/UHABR
H694	**n>v_Calc n-rated** (rated speed) If asynchronous motors are used, the synchronous speed *ns* should normally be entered here $n_s = \frac{120 * \text{line frequency_in_[Hz]}}{\text{no. of poles}}$ Example: *ns* = 1500 **[rev/min]** for 50 Hz line frequency and 4-pole machine PNU=69E Hex; Type=O2; Normalization: 1==1 min^{-1}; Block diag.: [31.5]	600 to 4000 [rev/min]	Ind: 4 FS=1450	1/UHABR 1/UHABR

Parameter set switchover (F200)

Function: The index for the switchover parameter set is selected with parameters H700 and H701:

x2	x1	Index
0	0	.01
0	1	.02
1	0	.03
1	1	.04

x1 ... State of binector selected in H700
x2 ... State of binector selected in H701

H700 *	**ParamSwtch B_x1** Selection of binector to be injected as x1 0 = Fixed value 0 1 = Fixed value 1 2 = Fixed value 0 3 = Binector B003 4 = Binector B004 etc. PNU=6A4 Hex; Type= O2; Normalization: 1==1; Block diag.: [36.1]	0 to 200	Ind: None FS=0	1/UHABR 1/UHAB
H701 *	**ParamSwtch B_x2** Selection of binector to be injected as x2 0 = Fixed value 0 1 = Fixed value 1 2 = Fixed value 0 3 = Binector B003 4 = Binector B004 etc. PNU=6A5 Hex; Type= O2; Normalization: 1==1; Block diag.: [36.1]	0 to 200	Ind: None FS=0	1/UHABR 1/UHAB

PNU *: Ack. par.	OP1 parameter name Description	Value range [unit] Selection text	No. of indices Factory setting	Read Write (Access / State)
H703 *	**Copy Parameter** This parameter allows parameter set 1, 2, 3 or 4 to be **copied** to parameter set 1, 2, 3 or 4. Parameter Hxxx i01 is the setting value for parameter set 1 Parameter Hxxx i02 is the setting value for parameter set 2 Parameter Hxxx i03 is the setting value for parameter set 3 Parameter Hxxx i04 is the setting value for parameter set 4 0xy **Do nothing**, automatic reset value at the end of a copy operation 1xy The contents of parameter set x (x = 1. 2. 3 or 4) are **copied** to parameter set y (y = 1. 2. 3 or 4) (parameter set x remains unchanged, the original contents of parameter set y are overwritten). x and y are the parameter set numbers (1. 2. 3 or 4) of the source and destination parameter sets respectively. A copy operation is started by switching H703 into "parameter" mode when H703 = 1xy has been set and the converter is not in the "RUN" operational state. To indicate that a copy operation is in progress, the numbers of the Hxxx parameters currently being processed are output sequentially as hex numbers on the parameter display as the "parameter value" during the copy operation. On completion of the copy operation, H703 is automatically reset to H703 = 0xy. PNU=6A7Hex; Type=L2; Normalization: 1==1Hex; Block diag.: [36.8]	011 to 144	Ind: None FS=012	1/UHABR 1/UHAB

PNU *: Ack. par.	OP1 parameter name Description	Value range [unit] Selection text	No. of indices Factory setting	Read Write (Access / State)

Switchover of task processing sequence

Function: The function blocks F200 to 1650 are processed within the computing cycle in the sequence determined by parameters H751 and H752:

⇓ 1. Function block with task number according to H751 Index.001
⇓ **...**
⇓ 116. Function block with task number according to H751 Index.116
⇓ 117. Function block with task number according to H752 Index.001
⇓ **...**
⇓ 146. Function block with task number according to H752 Index.030

In the factory setting (standard sequence), the task numbers are arranged in ascending order (F200, F210, ...).

Change in processing sequence:
If a new task number is entered (i.e. shifted from another location) in a certain index of H751 or H752, then the new task processing sequence is defined such that the function block previously entered in this index will be processed after the new block to be entered. To close the gap left in the old location of the function block to be shifted, the following task numbers are shifted up one place.

Note: If a non-existent task number is entered in parameter H751 or H752, the number entered is rounded down to the next lower legal number.

Example: Assuming that the standard sequence setting is currently valid, the processing sequence must be altered such that function block F260 (fixed setpoint of parameter H215) will be processed immediately after F210 (fixed setpoint of parameter H210): Task number 260 must be entered in the index in which the task number which has been processed after F210 until now (i.e. H751.003=dzt. 200) is currently entered. The task numbers 220 to 250 are automatically shifted up by one index in parameter H751.

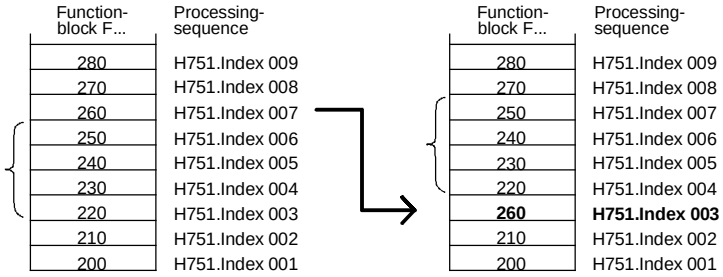

Example: Assuming that the standard sequence setting is currently valid, the processing sequence must be altered such that function block F210 (fixed setpoint H210) will be processed after F240 (fixed setpoint parameter H213): Task number 210 must be entered in the index in which the task number which has been processed after F240 (i.e. H751.006 = dzt. 250) is currently entered. The task numbers in the indices above it are shifted up by one index; the task numbers above the gap which has been created are then automatically shifted one index down.

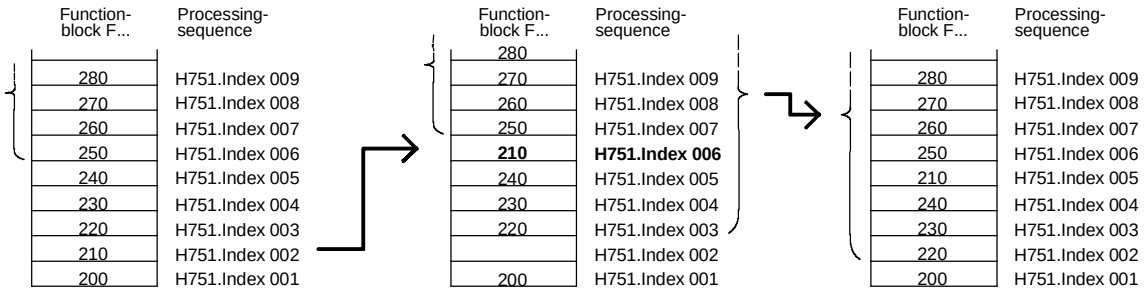

Note: If you wish to insert a function block last in the processing sequence, you need to do so in two steps:

1. Enter the task number of the function block to be shifted in H752.index 030
   After you have pressed the P (shift) key, this number will be inserted in the last but one position (→ in H752. Index 029)
2. Shift task number entered in H752.index 030 to H752.index 029
   After you press the P (shift) key, this task number will be shifted to the last but one place and the task number from H752.Index 029 to the last place (→ in H752. Index 030)

PNU *: Ack. par.	OP1 parameter name Description	Value range [unit] Selection text	No. of indices Factory setting	Read Write (Access / State)
H750 *	**FB Sequence** Select implementation of standard processing sequence or optimum sequence: 0 Return 1 Implement standard processing sequence: Task numbers (F200 to F1650) are entered in ascending order in parameters H751 and H752. The parameter is then automatically reset to 0. 2 Implement optimum sequence: (starting with software version 1.1) Task numbers (F200 to F1650) are entered in the order which results in the shortest possible dead times in parameters H751 and H752. The parameter is then automatically reset to 0. During the optimization run the numbers of the tasks appear one after the other on the parameter display while they are being processed as "Parameter value" (activity display). PNU=6D6 Hex; Type=O2; Normalization: 1==1	0 to 1 Return Standard Optimum	Ind: None FS=0	1/UHABR 1/UHAB
H751 *	**FB Sequence_1** Processing sequence for the foreground tasks F200 to F1650 i001: Select task no. for 1st position in processing sequence i002: Select task no. for 2nd position in processing sequence **...** i116: Select task no. for 116th position in processing sequence PNU=6D7 Hex; Type=O2; Normalization: 1==1	200 to 1650	Ind: 116 WE: Standard sequence	1/UHABR 1/UHAB
H752 *	**FB Sequence_2** Processing sequence for the foreground tasks F200 to F1650 i001: Select task no. for 117th position in processing sequence i002: Select task no. for 118th position in processing sequence **...** i030: Select task no. for 146th position in processing sequence PNU=6D8 Hex; Type=O2; Normalization: 1==1	200 to 1650	Ind: 30 WE: Standard sequence	1/UHABR 1/UHAB

System parameters

H917 *	**Spontaneous messages** (starting with software version 1.1) It is possible to select the interfaces via which active parameters will be output after their settings have been altered: 0 None 1 Output via DPRAM interface (to basic unit) 2 Output via USS interface 4 Output via COM-BOARD Setting information: The sum of the parameter values which are assigned to the desired output interfaces for spontaneous messages is entered in the parameter. PNU=77D Hex; Type=O2; Normalization: 1==1	0 to 7 none to bas.unit to TB USS to CB/SCB	Ind: None FS=0	1/UHABR 1/UHAB

PNU *: Ack. par.	OP1 parameter name Description	Value range [unit] Selection text	No. of indices Factory setting	Read Write (Access / State)
d951	**FaultTextList** List of fault texts. Every fault text is stored under the index corresponding to its fault number. i001 (F116): Fault H312 i002 (F117): Fault H297 i003 (F118): Fault H305 i004 (F119): COM Connint i005 (F120): Fault H260 i006 (F121): Fault H261 i007 (F122): Fault H262 i008 (F123): Fault H263 i009 (F124): F124 i010 (F125): F125 i011 (F126): F126 i012 (F127): F127 i013 (F128): F128 i014 (F129): F129 i015 (F130): F130 i016 (F131): F131 i017 (F132): F132 i018 (F133): F133 i019 (F134): F134 i020 (F135):: F135 i021 (F136): F136 i022 (F137): F137 i023 (F138): F138 i024 (F139): F139 i025 (F140): F140 i026 (F141): F141 i027 (F142): DataSavErr i028 (F143): ADCAdjErr i029 (F144): EEPROM def. i030 (F145): ParamError i031 (F146): Watchdog i032 (F147): Intern.Err PNU=79F Hex; Type= O2 ; Normalization: 1==1		Ind: 32	1/UHABR
d959	**Alarm A97-112** When one of the alarms A97 to A112 occurs, the bar indicated in the diagram below lights up on the 7-segment display 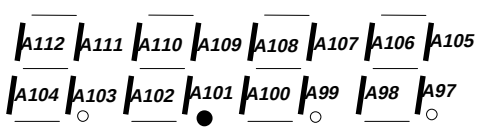 PNU=7A7 Hex; Type=V2; Normalization: 1==1		Ind: None	1/UHABR
d960	**Alarm A113-128** When one of the alarms A113 to A128 occurs, the bar indicated in the diagram below lights up on the 7-segment display 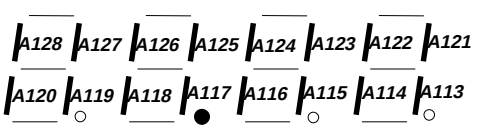 PNU=7A8 Hex; Type=V2; Normalization: 1==1		Ind: None	1/UHABR

PNU *: Ack. par.	OP1 parameter name Description	Value range [unit] Selection text	No. of indices Factory setting	Read Write (Access / State)
H970 *****	**FactorySett H Pr** Parameter reset to factory setting for H parameters (see Chapter 3.9) 0: Parameter reset: All parameters of the technology board (H parameters) are reset to their original values (factory settings). The parameter is then automatically reset to "1". 1: No parameter reset While the parameters are being reset to their factory settings, the numbers 1xxx of the Hxxx parameters currently being reset are output sequentially on the parameter display as the "parameter value" to indicate that the operation is in progress. PNU=7B2Hex; Type=O2; Normalization: 1==1	0 to 1 FactSetting Return	Ind: None FS=1	1/UHABR 1/UHAB
H971 *****	**EEPROM Transfer** (store H parameters in EEPROM) This function is edge-triggered, i.e. only when parameter H971 changes state from 0 to 1 are the values of the technology parameters (H parameters) transferred from the RAM to the non-volatile storage (EEPROM) (if H971 stays in the "1" state, no further store operation is executed). While the parameters are being transferred from the RAM to the EEPROM, the numbers 1xxx of the Hxxx parameters currently being transferred are output sequentially on the parameter display as the "parameter value" to indicate that the operation is in progress. On completion of transfer, H971 is automatically reset to "0". The power supply to the electronics can be switched off as soon as H971=0 is displayed. Note: This function is relevant only for parameter changes via a serial interface (e.g. via SIMOVIS). When parameter setting changes are made via the PMU, the parameters are always stored in a non-volatile memory. PNU=7B3 Hex; Type=O2; Normalization: 1==1	0 to 1	Ind: None FS=0	1/UHABR 1/UHAB

List of existing parameters (d and H parameters) on the technology board Function: Every parameter (array) has 116 elements in word size (16 bits). Each element contains a parameter number. The elements of a parameter are filled contiguously with ascending parameter numbers. If more than 115 parameter numbers need to be stored, the parameter number with which the number list is continued is stored in element 116. For example, parameter number d981 is stored in the 116th element of D980. The parameter numbers are stored in the representation used normally on the serial interfaces, i.e. with an offset of 1000 (decimal), e.g. H514 is displayed as "1514".				
d980	**ExistT100-Param.** (existing TECH BOARD parameter 1) PNU=7BC Hex; Type=O2; Normalization: 1==1	1000 to 1999 (=H/d000 to H/d999)	Ind: 116	1/UHABR
d981	**ExistT100-Param.** (existing TECH BOARD parameter 2) PNU=7BD Hex; Type=O2; Normalization: 1==1	1000 to 1999 (=H/d000 to H/d999)	Ind: 116	1/UHABR
d982	**ExistT100-Param.** (existing TECH BOARD parameter 3) PNU=7BE Hex; Type=O2; Normalization: 1==1	1000 to 1999 (=H/d000 to H/d999)	Ind: 116	1/UHABR
d983	**ExistT100-Param.** (existing TECH BOARD parameter 4) PNU=7BF Hex; Type=O2; Normalization: 1==1	1000 to 1999 (=H/d000 to H/d999)	Ind: 116	1/UHABR
d984	**ExistT100-Param.** (existing TECH BOARD parameter 5) PNU=7C0 Hex; Type=O2; Normalization: 1==1	1000 to 1999 (=H/d000 to H/d999)	Ind: 116	1/UHABR
d985	**ExistT100-Param.** (existing TECH BOARD parameter 6) PNU=7C1 Hex; Type=O2; Normalization: 1==1	1000 to 1999 (=H/d000 to H/d999)	Ind: 116	1/UHABR
d986	**ExistT100-Param.** (existing TECH BOARD parameter 7) PNU=7C2 Hex; Type=O2; Normalization: 1==1	1000 to 1999 (=H/d000 to H/d999)	Ind: 116	1/UHABR
d987	**ExistT100-Param.** (existing TECH BOARD parameter 8) PNU=7C3 Hex; Type=O2; Normalization: 1==1	1000 to 1999 (=H/d000 to H/d999)	Ind: 116	1/UHABR
d988	**ExistT100-Param.** (existing TECH BOARD parameter 9) PNU=7C4 Hex; Type=O2; Normalization: 1==1	1000 to 1999 (=H/d000 to H/d999)	Ind: 116	1/UHABR

PNU *: Ack. par.	OP1 parameter name Description	Value range [unit] Selection text	No. of indices Factory setting	Read Write (Access / State)
Modified parameters on the technology board (H parameters) Function: Every parameter (array) has 116 elements in word size (16 bits). Each element contains a parameter number. The elements of a parameter are filled contiguously and in ascending order with the numbers of parameters which have been modified as compared to the factory setting. If more than 115 parameter numbers need to be stored, the parameter number with which the number list is continued is stored in element 116. For example, parameter number d991 is stored in the 116th element of D990. The number of the last modified parameter is followed by a "0" end label under the next index of d990. The parameter numbers are stored in the representation used normally on the serial interfaces, i.e. with an offset of 1000 (decimal), e.g. H514 is displayed as "1514".				
d990	**ModifT100-Param.** (modified TECH BOARD parameter 1) PNU=7C6 Hex; Type=O2; Normalization: 1==1	1000 to 1999 (=H/d000 to H/d999)	Ind: 116	1/UHABR
d991	**ModifT100-Param.** (modified TECH BOARD parameter 2) PNU=7C7 Hex; Type=O2; Normalization: 1==1	1000 to 1999 (=H/d000 to H/d999)	Ind: 116	1/UHABR
d992	**ModifT100-Param.** (modified TECH BOARD parameter 3) PNU=7C8 Hex; Type=O2; Normalization: 1==1	1000 to 1999 (=H/d000 to H/d999)	Ind: 116	1/UHABR
d993	**ModifT100-Param.** (modified TECH BOARD parameter 4) PNU=7C9 Hex; Type=O2; Normalization: 1==1	1000 to 1999 (=H/d000 to H/d999)	Ind: 116	1/UHABR
d994	**ModifT100-Param.** (modified TECH BOARD parameter 5) PNU=7CA Hex; Type=O2; Normalization: 1==1	1000 to 1999 (=H/d000 to H/d999)	Ind: 116	1/UHABR
d995	**ModifT100-Param.** (modified TECH BOARD parameter 6) PNU=7CB Hex; Type=O2; Normalization: 1==1	1000 to 1999 (=H/d000 to H/d999)	Ind: 116	1/UHABR
d996	**ModifT100-Param.** (modified TECH BOARD parameter 7) PNU=7CC Hex; Type=O2; Normalization: 1==1	1000 to 1999 (=H/d000 to H/d999)	Ind: 116	1/UHABR
d997	**ModifT100-Param.** (modified TECH BOARD parameter 8) PNU=7CD Hex; Type=O2; Normalization: 1==1	1000 to 1999 (=H/d000 to H/d999)	Ind: 116	1/UHABR
d998	**ModifT100-Param.** (modified TECH BOARD parameter 9) PNU=7CE Hex; Type=O2; Normalization: 1==1	1000 to 1999 (=H/d000 to H/d999)	Ind: 116	1/UHABR

5 List of Connectors and Binectors

5.1 Connector list

The following number notation applies to all connectors:
According to the internal software notation, 100% corresponds to the number 4000 hex = 16384 dec. The value range is -200.00% ... +199.99% corresponding to 8000 hex ... 7FFF hex. The connectors are transferred in this internal software notation via the serial interfaces.

Connector	Name, Description	Selection Text	Normalization	Block Diag.
Fixed values				
K000	Fixed value 0	FixValue 0		[8.7]
K001	Fixed value 100 %	FixValue100	16384==100%	[8.7]
K002	Fixed value 0 or special function specified in each case	Block-spec.		
Analog inputs				
K003	Analog input, terminal 50 (Term. 50, 51)	AE50 value	16384==100%	[2.8]
K004	Analog input, terminal 52 (Term. 52, 53)	AE52 value	16384==100%	[2.8]
K005	Analog input, terminal 54 (Term. 54, 55)	AE54 value	16384==100%	[3.8]
K006	Analog input, terminal 56 (Term. 56, 57)	AE56 value	16384==100%	[3.8]
K007	Analog input, terminal 58 (Term. 58, 59)	AE58 value	16384==100%	[3.8]
Analog outputs				
K008	Analog output, terminal 61 (Term. 61, 62)	AA61 value	16384==100%	[4.4]
K009	Analog output, terminal 63 (Term. 63, 64)	AA63 value	16384==100%	[4.4]
Binary inputs				
K010	Binary input, terminal 77 (2^8)	BE77 signal	16384==100%	[5.7]
K011	Binary input, terminal 78 (2^9)	BE78 signal	16384==100%	[5.7]
K012	Binary input, terminal 79 (2^{10})	BE79 signal	16384==100%	[5.7]
K013	Binary input, terminal 80 (2^{11})	BE80 signal	16384==100%	[5.7]
K014	Binary input, terminal 81 (2^{12})	BE81 signal	16384==100%	[6.7]
K015	Binary input, terminal 82 (2^{13})	BE82 signal	16384==100%	[6.7]
K016	Binary input, terminal 83 (2^{14})	BE83 signal	16384==100%	[6.7]
K017	Binary input, terminal 84 (2^{15})	BE84 signal	16384==100%	[6.7]
K018	Binary inputs, terminals 77 to 84 (2^8 to 2^{15}) Bit 8 = Status terminal 77 Bit 9 = Status terminal 78 Bit 10 = Status terminal 79 Bit 11 = Status terminal 80 Bit 12 = Status terminal 81 Bit 13 = Status terminal 82 Bit 14 = Status terminal 83 Bit 15 = Status terminal 84	BE bits	1==1	[5.5]
Binary outputs				
K019	Binary outputs, terminals 87 to 91 (2^{11} to 2^{15}) Bit 11 = Status terminal 87 Bit 12 = Status terminal 88 Bit 13 = Status terminal 89 Bit 14 = Status terminal 90 Bit 15 = Status terminal 91	BA bits	1==1	[7.5]

Connector	Name, Description	Selection Text	Normalization	Block Diag.
Fixed setpoints				
K020	Fixed setpoint 1 (H210)	H210 Fsetp1	16384==100%	[8.1]
K021	Fixed setpoint 2 (H211)	H211 Fsetp2	16384==100%	[8.1]
K022	Fixed setpoint 3 (H212)	H212 Fsetp3	16384==100%	[8.1]
K023	Fixed setpoint 4 (H213)	H213 Fsetp4	16384==100%	[8.1]
K024	Fixed setpoint 5 (H214)	H214 Fsetp5	16384==100%	[8.1]
K025	Fixed setpoint 6 (H215)	H215 Fsetp6	16384==100%	[8.1]
K026	Fixed setpoint 7 (H216)	H216 Fsetp7	16384==100%	[8.1]
K027	Fixed setpoint 8 (H217)	H217 Fsetp8	16384==100%	[8.1]
K028	Fixed setpoint 9 (H218)	H218 Fsetp9	16384==100%	[8.1]
K029	Fixed setpoint 10 (H219)	H219 Fset10	16384==100%	[8.1]
K030	Fixed setpoint 11 (H220)	H220 Fset11	16384==100%	[8.1]
K031	Fixed setpoint 12 (H221)	H221 Fset12	16384==100%	[8.1]
K032	Fixed setpoint 13 (H222)	H222 Fset13	16384==100%	[8.1]
K033	Fixed setpoint 14 (H223)	H223 Fset14	16384==100%	[8.1]

Process data exchange with basic unit				
K034	Status word 1 (from basic unit)	STW1 frm BU	1==1	[13.2]
K035	Status word 2 (from basic unit)	STW2 frm BU	1==1	[14.2]
K036	Control word 1 (to basic unit)	CTW1 to BU	1==1	[11.4]
K037	Control word 2 (to basic unit)	CTW2 to BU	1==1	[12.4]
K038	Actual value 1 (from basic unit)	ActV1 frmBU	1==1	[10.3]
K039	Actual value 2 (from basic unit)	ActV2 frmBU	1==1	[10.3]
K040	Actual value 3 (from basic unit)	ActV3 frmBU	1==1	[10.3]
K041	Actual value 4 (from basic unit)	ActV4 frmBU	1==1	[10.3]
K042	Actual value 5 (from basic unit)	ActV5 frmBU	1==1	[10.3]
K043	Actual value 6 (from basic unit)	ActV6 frmBU	1==1	[10.3]
K044	Actual value 7 (from basic unit)	ActV7 frmBU	1==1	[10.3]
K045	Actual value 8 (from basic unit)	ActV8 frmBU	1==1	[10.3]
K046	Actual value 1 (from basic unit) * 4	ActV1*4 fBU	1==1	[10.3]
K047	Actual value 2 (from basic unit) * 4	ActV2*4 fBU	1==1	[10.3]
K048	Actual value 3 (from basic unit) * 4	ActV3*4 fBU	1==1	[10.3]
K049	Actual value 4 (from basic unit) * 4	ActV4*4 fBU	1==1	[10.3]
K050	Actual value 5 (from basic unit) * 4	ActV5*4 fBU	1==1	[10.3]
K051	Actual value 6 (from basic unit) * 4	ActV6*4 fBU	1==1	[10.3]
K052	Actual value 7 (from basic unit) * 4	ActV7*4 fBU	1==1	[10.3]
K053	Actual value 8 (from basic unit) * 4	ActV8*4 fBU	1==1	[10.3]
K054	Dyn. read/write function: Parameter value read from basic unit	Param frBU	1==1	[15.2]

K055	Fixed value 0	FixValue 0		
K056	Fixed value 0	FixValue 0		

Receive data, peer-to-peer connection				
K057	Word 1	PeerRecv. 1	1==1	[17.4]
K058	Word 2	PeerRecv. 2	1==1	[17.4]
K059	Word 3	PeerRecv. 3	1==1	[17.4]
K060	Word 4	PeerRecv. 4	1==1	[17.4]
K061	Word 5	PeerRecv. 5	1==1	[17.4]

Connector	Name, Description	Selection Text	Normalization	Block Diag.
Receive data, COM BOARD				
K062	Word 1	CB Recv. 1	1==1	[18.3]
K063	Word 2	CB Recv. 2	1==1	[18.3]
K064	Word 3	CB Recv. 3	1==1	[18.3]
K065	Word 4	CB Recv. 4	1==1	[18.3]
K066	Word 5	CB Recv. 5	1==1	[18.3]
K067	Word 6	CB Recv. 6	1==1	[18.3]
K068	Word 7	CB Recv. 7	1==1	[18.3]
K069	Word 8	CB Recv. 8	1==1	[18.3]
K070	Word 9	CB Recv. 9	1==1	[18.3]
K071	Word 10	CB Recv. 10	1==1	[18.3]
Binector/connector converters 1 - 3				
K072	Output, binector/connector converter 1 (bit field)	Bin>con1Out	1==1	[20.4]
K073	Output, binector/connector converter 2 (bit field)	Bin>con2Out	1==1	[20.8]
K074	Output, binector/connector converter 3 (bit field)	Bin>con3Out	1==1	[20.4]
Technology controller				
K075	Technology controller actual value, with sign	TeCtr Act	16384==100%	[21.2]
K076	Technology controller actual value, absolute	TeCtr |Act|	16384==100%	[21.3]
K077	D component	TeCtr D	16384==100%	[21.5]
K078	Technology controller setpoint	TeCtr Set	16384==100%	[21.2]
K079	Technology controller setpoint, filtered	TeCtr SetF	16384==100%	[21.3]
K080	Setpoint/actual value diference	TeCtr Dif	16384==100%	[21.7]
K081	Setpoint/actual value diference after droop	TeCtr DrDif	16384==100%	[21.7]
K082	P component	TeCtr P	16384==100%	[21.7]
K083	I component	TeCtr I	16384==100%	[21.7]
K084	Positive limit for technology controller output	TeCtr +Lmt	16384==100%	[21.8]
K085	Negative limit for technology controller output	TeCtr -Lmt	16384==100%	[21.8]
K086	(positive limit for technology controller output) * (-1)	TeCtr-(+Lm)	16384==100%	[21.8]
K087	Technology controller output	TeCtr Out	16384==100%	[21.8]
K088	Technology controller output after multiplication with weighting factor	TeCtrWgtOut	16384==100%	[21.8]
Comfort ramp-function generator				
K089	Input variable	CORFG Inp	16384==100%	[22.2]
K090	Effective ramp-function generator input variable	CORFG EfInp	16384==100%	[22.3]
K091	Effective ramp-up time	CORFG RUT	1==0.01 s	[22.4]
K092	Effective ramp-down time	CORFG RDT	1==0.01 s	[22.4]
K093	Effective lower transition rounding	CORFG LTR	1==0.01 s	[22.5]
K094	Effective upper transition rounding	CORFG UTR	1==0.01 s	[22.5]
K095	dy/dt (ramp generator output rise in time set in H367)	CORFG dydt	16384==100%	[22.5]
K096	Ramp-function generator output	CORFG Outp	16384==100%	[22.5]
K097	Input variable for limitation after ramp-function generator (setpoint limitation)	CORFG SetIm	16384==100%	[22.8]
K098	Lowest positive setpoint limit	CORFG +Set	16384==100%	[22.8]
K099	Lowest negative setpoint limit	CORFG -Set	16384==100%	[22.8]

Connector	Name, Description	Selection Text	Normalization	Block Diag.
K100	Setpoint (after setpoint limitation)	CORFG Setp	16384==100%	[22.8]
K101	Fixed limitation value for positive limitation in ramp generator	CORFG +Lm	16384==100%	[22.7]
K102	(positive limitation in ramp-function generator) * (-1)	CORFG -Lm	16384==100%	[22.7]
Wobble generator				
K103	Wobbler signal	Wobblersign	16384==100%	[24.7]
K104	Modulated setpoint	Mod. setp.	16384==100%	[24.7]
Adders				
K105	Output, adder 1	ADD1 Outp	16384==100%	[25.2]
K106	Output, adder 2	ADD2 Outp	16384==100%	[25.3]
K107	Output, adder 3	ADD3 Outp	16384==100%	[25.5]
K108	Output, adder 4	ADD4 Outp	16384==100%	[25.7]
K109	Output, adder 5	ADD5 Outp	16384==100%	[25.8]
Subtracters				
K110	Output, subtracter 1	SUB1 Outp	16384==100%	[25.2]
K111	Output, subtracter 2	SUB2 Outp	16384==100%	[25.4]
K112	Output, subtracter 3	SUB3 Outp	16384==100%	[25.5]
Sign inverters				
K113	Output, sign inverter 1	SignInv1Out	16384==100%	[25.2]
K114	Output, sign inverter 2	SignInv2Out	16384==100%	[25.4]
K115	Output, sign inverter 3	SignInv3Out	16384==100%	[25.5]
K116	Output, switchable sign inverter	SignInv4Out	16384==100%	[25.8]
Dividers				
K117	Output, divider 1	DIV1 Outp	16384==100%	[26.2]
K118	Output, divider 2	DIV2 Outp	16384==100%	[26.2]
K119	Output, divider 3	DIV3 Outp	16384==100%	[26.2]
Multipliers				
K120	Output, multiplier 1	MUL1 Outp	16384==100%	[26.4]
K121	Output, multiplier 2	MUL2 Outp	16384==100%	[26.5]
K122	Output, multiplier 3	MUL3 Outp	16384==100%	[26.7]
K123	Output, multiplier 4	MUL4 Outp	16384==100%	[26.8]
High-resolution multipliers/dividers				
K124	Output, high-resolution multiplier/divider 1	MULDIV1Outp	16384==100%	[26.5]
K125	Output, high-resolution multiplier/divider 2	MULDIV2Outp	16384==100%	[26.8]
K126	Output, high-resolution multiplier/divider 3	MULDIV3Outp	16384==100%	[26.5]
Absolute-value generators with filter				
K127	Output, absolute-value generator with filter 1	AbsFilt1Out	16384==100%	[27.3]
K128	Output, absolute-value generator with filter 2	AbsFilt2Out	16384==100%	[27.3]
K129	Output, absolute-value generator with filter 3	AbsFilt3Out	16384==100%	[27.3]
K130	Output, absolute-value generator with filter 4	AbsFilt4Out	16384==100%	[27.3]

Connector	Name, Description	Selection Text	Normalization	Block Diag.
Limit-value monitors with filter				
K131	Limit-value monitor with filter 1: Input variable A filtered	LMon1 AInp	16384==100%	[27.5]
K132	Limit-value monitor with filter 1: Fixed operating threshold	LMon1 Thrs	16384==100%	[27.4]
K133	Limit-value monitor with filter 2: Input variable A filtered	LMon2 AInp	16384==100%	[27.5]
K134	Limit-value monitor with filter 2: Fixed operating threshold	LMon2 Thrs	16384==100%	[27.4]
Maximum/minimum selection				
K135	Output, maximum selection	MAX Outp	16384==100%	[28.2]
K136	Output, minimum selection	MIN Outp	16384==100%	[28.2]
Tracking/storage elements				
K137	Output, tracking/storage element 1	TrkStrg1out	16384==100%	[28.5]
K138	Output, tracking/storage element 2	TrkStrg2out	16384==100%	[28.8]
Analog signal memories				
K139	Output, analog signal memory 1	AnaStrg1out	16384==100%	[28.5]
K140	Output, analog signal memory 2	AnaStrg2out	16384==100%	[28.8]
Analog signal switches				
K141	Output, analog signal switch 1	AnSwtch1Out	16384==100%	[29.3]
K142	Output, analog signal switch 2	AnSwtch2Out	16384==100%	[29.3]
K143	Output, analog signal switch 3	AnSwtch3Out	16384==100%	[29.3]
K144	Output, analog signal switch 4	AnSwtch4Out	16384==100%	[29.3]
K145	Output, analog signal switch 5	AnSwtch5Out	16384==100%	[29.5]
K146	Output, analog signal switch 6	AnSwtch6Out	16384==100%	[29.5]
K147	Output, analog signal switch 7	AnSwtch7Out	16384==100%	[29.5]
K148	Output, analog signal switch 8	AnSwtch8Out	16384==100%	[29.5]
K149	Output, analog signal switch 9	AnSwtch9Out	16384==100%	[29.7]
K150	Output, analog signal switch 10	AnSwtch10Ot	16384==100%	[29.7]
Simple ramp-function generator				
K151	Output, simple ramp-function generator	S-RFG outp	16384==100%	[30.5]
Dead zone				
K152	Output, dead zone	DdZone Outp	16384==100%	[30.3]
Characteristic blocks				
K153	Output, characteristic block 1	ChrBlk1Outp	16384==100%	[30.8]
K154	Output, characteristic block 2	ChrBlk2Outp	16384==100%	[30.8]
K155	Output, characteristic block 3	ChrBlk3Outp	16384==100%	[30.8]
Velocity/speed calculators				
K156	Output, speed/velocity calculator (actual velocity)	n -> v outp	1==1 mm/s	[31.7]
K157	Output, speed/velocity calculator (setpoint speed)	v -> n outp	16384==100%	[31.7]

Connector	Name, Description	Selection Text	Normalization	Block Diag.
Motorized potentiometer (see also K180)				
K158	Output of motorized potentiometer	MOP outp	16384==100%	[23.8]
K159	Weighted output of motorized potentiometer	MOPWghtOutp	16384==100%	[23.8]
K160	dy/dt (rise in ramp generator output in time set in H412 and H404)	MOP dy/dt	16384==100%	[23.8]

Receive data via USS interface				
K161	Word 1	USS Recv. 1	1==1	[16.4]
K162	Word 2	USS Recv. 2	1==1	[16.4]
K163	Word 3	USS Recv. 3	1==1	[16.4]
K164	Word 4	USS Recv. 4	1==1	[16.4]
K165	Word 5	USS Recv. 5	1==1	[16.4]
K166	Word 6	USS Recv. 6	1==1	[16.4]
K167	Word 7	USS Recv. 7	1==1	[16.4]
K168	Word 8	USS Recv. 8	1==1	[16.4]
K169	Word 9	USS Recv. 9	1==1	[16.4]
K170	Word 10	USS Recv.10	1==1	[16.4]

Limiters				
K171	Limiter 1: Fixed limitation value	Lmtr1 Limit	16384==100%	[27.1]
K172	Limiter 1: (positive limitation value) * (-1)	Lmtr1 -lmt	16384==100%	[27.1]
K173	Limiter 1: Output	Lmtr1 Outp	16384==100%	[27.4]
K174	Limiter 2: Fixed limitation value	Lmtr2 Limit	16384==100%	[27.5]
K175	Limiter 2: (positive limitation value) * (-1)	Lmtr2 -lmt	16384==100%	[27.5]
K176	Limiter 2: Output	Lmtr2 Outp	16384==100%	[27.7]

Fixed setpoint (starting with software version 1.1)				
K177	Fixed setpoint 15 (H224)	H224 Fset15	16384==100%	[8.3]

(starting with software version 1.1)				
K178	not used			
K179	not used			

Motorized potentiometer (starting with software version 1.1)				
K180	Input of the ramp-function generator in motorized potentiometer (setpoint)	MOP input	16384==100%	[23.5]

5.2 Binector list

Binector	Name, Description	Selection Text	Block diag.
Fixed values			
B000	Fixed value 0	FixedValue0	[8.7]
B001	Fixed value 1	FixedValue1	[8.7]
B002	Fixed value 0	FixedValue0	
Analog inputs			
B003	Analog input, terminal 50: 1 = wire break (i ≤ 2 mA)	AE50 Interr	[2.8]
B004	Analog input, terminal 52: 1 = wire break (i ≤ 2 mA)	AE52 Interr	[2.8]
B005	Analog input, terminal 54: 1 = wire break (i ≤ 2 mA)	AE54 Interr	[3.8]
B006	Analog input, terminal 56: 1 = wire break (i ≤ 2 mA)	AE56 Interr	[3.8]
B007	Analog input, terminal 58: 1 = wire break (i ≤ 2 mA)	AE58 Interr	[3.8]
Binary inputs			
B008	Status, terminal 77	BE77 value	[5.7]
B009	Status, terminal 77, inverted	BE77 invert	[5.4]
B010	Status, terminal 78	BE78 value	[5.7]
B011	Status, terminal 78, inverted	BE78 invert	[5.4]
B012	Status, terminal 79	BE79 value	[5.7]
B013	Status, terminal 79, inverted	BE79 invert	[5.4]
B014	Status, terminal 80	BE80 value	[5.7]
B015	Status, terminal 80, inverted	BE80 invert	[5.4]
B016	Status, terminal 81	BE81 value	[6.7]
B017	Status, terminal 81, inverted	BE81 invert	[6.4]
B018	Status, terminal 82	BE82 value	[6.7]
B019	Status, terminal 82, inverted	BE82 invert	[6.4]
B020	Status, terminal 83	BE83 value	[6.7]
B021	Status, terminal 83, inverted	BE83 invert	[6.4]
B022	Status, terminal 84	BE84 value	[6.7]
B023	Status, terminal 84, inverted	BE84 invert	[6.4]
Fixed control bits			
B024	Control bit 1 (H230)	H230 CtrBit	[8.3]
B025	Control bit 2 (H231)	H231 CtrBit	[8.3]
B026	Control bit 3 (H232)	H232 CtrBit	[8.3]
B027	Control bit 4 (H233)	H233 CtrBit	[8.3]
B028	Control bit 5 (H234)	H234 CtrBit	[8.3]
B029	Control bit 6 (H235)	H235 CtrBit	[8.3]
Voltage monitor, electronics power supply			
B030	Power ON (100 ms pulse when voltage is connected)	Power ON	[9.8]
B031	Power OFF (10 ms pulse when voltage is disconnected)	Power OFF	[9.8]
Process data exchange with basic unit			
B032	Status word 1 (from basic unit), bit 0	STW1.0 fBU	[13.8]
B033	Status word 1 (from basic unit), bit 1	STW1.1 fBU	[13.8]
B034	Status word 1 (from basic unit), bit 2	STW1.2 fBU	[13.8]

Binector	Name, Description	Selection Text	Block diag.
B035	Status word 1 (from basic unit), bit 3	STW1.3 fBU	[13.8]
B036	Status word 1 (from basic unit), bit 4	STW1.4 fBU	[13.8]
B037	Status word 1 (from basic unit), bit 5	STW1.5 fBU	[13.8]
B038	Status word 1 (from basic unit), bit 6	STW1.6 fBU	[13.8]
B039	Status word 1 (from basic unit), bit 7	STW1.7 fBU	[13.8]
B040	Status word 1 (from basic unit), bit 8	STW1.8 fBU	[13.8]
B041	Status word 1 (from basic unit), bit 9	STW1.9 fBU	[13.8]
B042	Status word 1 (from basic unit), bit 10	STW1.10 fBU	[13.8]
B043	Status word 1 (from basic unit), bit 11	STW1.11 fBU	[13.8]
B044	Status word 1 (from basic unit), bit 12	STW1.12 fBU	[13.8]
B045	Status word 1 (from basic unit), bit 13	STW1.13 fBU	[13.8]
B046	Status word 1 (from basic unit), bit 14	STW1.14 fBU	[13.8]
B047	Status word 1 (from basic unit), bit 15	STW1.15 fBU	[13.8]
B048	Status word 2 (from basic unit), bit 16	STW2.16 fBU	[14.8]
B049	Status word 2 (from basic unit), bit 17	STW2.17 fBU	[14.8]
B050	Status word 2 (from basic unit), bit 18	STW2.18 fBU	[14.8]
B051	Status word 2 (from basic unit), bit 19	STW2.19 fBU	[14.8]
B052	Status word 2 (from basic unit), bit 20	STW2.20 fBU	[14.8]
B053	Status word 2 (from basic unit), bit 21	STW2.21 fBU	[14.8]
B054	Status word 2 (from basic unit), bit 22	STW2.22 fBU	[14.8]
B055	Status word 2 (from basic unit), bit 23	STW2.23 fBU	[14.8]
B056	Status word 2 (from basic unit), bit 24	STW2.24 fBU	[14.8]
B057	Status word 2 (from basic unit), bit 25	STW2.25 fBU	[14.8]
B058	Status word 2 (from basic unit), bit 26	STW2.26 fBU	[14.8]
B059	Status word 2 (from basic unit), bit 27	STW2.27 fBU	[14.8]
B060	Status word 2 (from basic unit), bit 28	STW2.28 fBU	[14.8]
B061	Status word 2 (from basic unit), bit 29	STW2.29 fBU	[14.8]
B062	Status word 2 (from basic unit), bit 30	STW2.30 fBU	[14.8]
B063	Status word 2 (from basic unit), bit 31	STW2.31 fBU	[14.8]

Connector/binector converter 1			
B064	Bit field 1 (1st converted connector), bit 0	Bit fld 1.0	[19.8]
B065	Bit field 1 (1st converted connector), bit 1	Bit fld 1.1	[19.8]
B066	Bit field 1 (1st converted connector), bit 2	Bit fld 1.2	[19.7]
B067	Bit field 1 (1st converted connector), bit 3	Bit fld 1.3	[19.7]
B068	Bit field 1 (1st converted connector), bit 4	Bit fld 1.4	[19.7]
B069	Bit field 1 (1st converted connector), bit 5	Bit fld 1.5	[19.7]
B070	Bit field 1 (1st converted connector), bit 6	Bit fld 1.6	[19.7]
B071	Bit field 1 (1st converted connector), bit 7	Bit fld 1.7	[19.7]
B072	Bit field 1 (1st converted connector), bit 8	Bit fld 1.8	[19.7]
B073	Bit field 1 (1st converted connector), bit 9	Bit fld 1.9	[19.6]
B074	Bit field 1 (1st converted connector), bit 10	Bit fld1.10	[19.6]
B075	Bit field 1 (1st converted connector), bit 11	Bit fld1.11	[19.6]
B076	Bit field 1 (1st converted connector), bit 12	Bit fld1.12	[19.6]
B077	Bit field 1 (1st converted connector), bit 13	Bit fld1.13	[19.6]
B078	Bit field 1 (1st converted connector), bit 14	Bit fld1.14	[19.6]
B079	Bit field 1 (1st converted connector), bit 15	Bit fld1.15	[19.5]

Binector	Name, Description	Selection Text	Block diag.
Connector/binector converter 2			
B080	Bit field 2 (2nd converted connector), bit 0	Bit fld 2.0	[19.8]
B081	Bit field 2 (2nd converted connector), bit 1	Bit fld 2.1	[19.8]
B082	Bit field 2 (2nd converted connector), bit 2	Bit fld 2.2	[19.7]
B083	Bit field 2 (2nd converted connector), bit 3	Bit fld 2.3	[19.7]
B084	Bit field 2 (2nd converted connector), bit 4	Bit fld 2.4	[19.7]
B085	Bit field 2 (2nd converted connector), bit 5	Bit fld 2.5	[19.7]
B086	Bit field 2 (2nd converted connector), bit 6	Bit fld 2.6	[19.7]
B087	Bit field 2 (2nd converted connector), bit 7	Bit fld 2.7	[19.7]
B088	Bit field 2 (2nd converted connector), bit 8	Bit fld 2.8	[19.7]
B089	Bit field 2 (2nd converted connector), bit 9	Bit fld 2.9	[19.6]
B090	Bit field 2 (2nd converted connector), bit 10	Bit fld2.10	[19.6]
B091	Bit field 2 (2nd converted connector), bit 11	Bit fld2.11	[19.6]
B092	Bit field 2 (2nd converted connector), bit 12	Bit fld2.12	[19.6]
B093	Bit field 2 (2nd converted connector), bit 13	Bit fld2.13	[19.6]
B094	Bit field 2 (2nd converted connector), bit 14	Bit fld2.14	[19.6]
B095	Bit field 2 (2nd converted connector), bit 15	Bit fld2.15	[19.5]

Connector/binector converter 3			
B096	Bit field 3 (3rd converted connector), bit 0	Bit fld 3.0	[19.4]
B097	Bit field 3 (3rd converted connector), bit 1	Bit fld 3.1	[19.4]
B098	Bit field 3 (3rd converted connector), bit 2	Bit fld 3.2	[19.3]
B099	Bit field 3 (3rd converted connector), bit 3	Bit fld 3.3	[19.3]
B100	Bit field 3 (3rd converted connector), bit 4	Bit fld 3.4	[19.3]
B101	Bit field 3 (3rd converted connector), bit 5	Bit fld 3.5	[19.3]
B102	Bit field 3 (3rd converted connector), bit 6	Bit fld 3.6	[19.3]
B103	Bit field 3 (3rd converted connector), bit 7	Bit fld 3.7	[19.3]
B104	Bit field 3 (3rd converted connector), bit 8	Bit fld 3.8	[19.2]
B105	Bit field 3 (3rd converted connector), bit 9	Bit fld 3.9	[19.2]
B106	Bit field 3 (3rd converted connector), bit 10	Bit fld3.10	[19.2]
B107	Bit field 3 (3rd converted connector), bit 11	Bit fld3.11	[19.2]
B108	Bit field 3 (3rd converted connector), bit 12	Bit fld3.12	[19.2]
B109	Bit field 3 (3rd converted connector), bit 13	Bit fld3.13	[19.2]
B110	Bit field 3 (3rd converted connector), bit 14	Bit fld3.14	[19.2]
B111	Bit field 3 (3rd converted connector), bit 15	Bit fld3.15	[19.1]

Technology controller			
B112	Technology controller at output limitation	TeCtrOutpLm	[21.8]

Comfort ramp-function generator			
B113	Ramp-function generator output = Ramp-function generator input (y = x)	CORFG y=x	[22.5]
B114	Ramp-function generator output = 0 (y = 0)	CORFG y=0	[22.5]
B115	Limitation after ramp-function generator (setpoint limitation) has responded	CORFG y=lmt	[22.8]

Motorized potentiometer			
B116	Ramp-up complete (y = x or limit reached)	MOP y=x	[23.8]
B117	Motorized potentiometer output = 0 (y = 0)	MOP y=0	[23.8]

Binector	Name, Description	Selection Text	Block diag.
Wobble generator			
B118	Synchronizing signal to slave	WobbSyncout	[24.7]

Limiters			
B119	Limiter 1 - positive limitation has responded	Lmt1 +Lm!	[27.3]
B120	Limiter 1 - negative limitation has responded	Lmt1 -Lm!	[27.3]
B121	Limiter 2 - positive limitation has responded	Lmt2 +Lm!	[27.7]
B122	Limiter 2 - negative limitation has responded	Lmt2 -Lm!	[27.7]

Limit-value monitor with filter			
B123	Limit-value monitor with filter 1	Lmonit out1	[27.8]
B124	Limit-value monitor with filter 2	Lmonit out2	[27.8]

Logic functions			
B125	Output, AND gate with 3 inputs 1	AND1 Outp	[32.2]
B126	Output, AND gate with 3 inputs 2	AND2 Outp	[32.2]
B127	Output, AND gate with 3 inputs 3	AND3 Outp	[32.2]
B128	Output, AND gate with 3 inputs 4	AND4 Outp	[32.2]
B129	Output, AND gate with 3 inputs 5	AND5 Outp	[32.2]
B130	Output, AND gate with 3 inputs 6	AND6 Outp	[32.2]
B131	Output, AND gate with 3 inputs 7	AND7 Outp	[32.2]
B132	Output, AND gate with 3 inputs 8	AND8 Outp	[32.2]
B133	Output, AND gate with 3 inputs 9	AND9 Outp	[32.5]
B134	Output, AND gate with 3 inputs 10	AND10 Outp	[32.5]
B135	Output, AND gate with 3 inputs 11	AND11 Outp	[32.5]
B136	Output, AND gate with 3 inputs 12	AND12 Outp	[32.5]
B137	Output, AND gate with 3 inputs 13	AND13 Outp	[32.5]
B138	Output, AND gate with 3 inputs 14	AND14 Outp	[32.5]
B139	Output, AND gate with 3 inputs 15	AND15 Outp	[32.5]
B140	Output, AND gate with 3 inputs 16	AND16 Outp	[32.5]
B141	Output, OR gate with 3 inputs 1	OR1 Outp	[32.7]
B142	Output, OR gate with 3 inputs 2	OR2 Outp	[32.7]
B143	Output, OR gate with 3 inputs 3	OR3 Outp	[32.7]
B144	Output, OR gate with 3 inputs 4	OR4 Outp	[32.7]
B145	Output, OR gate with 3 inputs 5	OR5 Outp	[32.7]
B146	Output, OR gate with 3 inputs 6	OR6 Outp	[32.7]
B147	Output, OR gate with 3 inputs 7	OR7 Outp	[32.7]
B148	Output, OR gate with 3 inputs 8	OR8 Outp	[32.7]
B149	Output, inverter 1	INV1 Outp	[33.2]
B150	Output, inverter 2	INV2 Outp	[33.2]
B151	Output, inverter 3	INV3 Outp	[33.2]
B152	Output, inverter 4	INV4 Outp	[33.2]
B153	Output, inverter 5	INV5 Outp	[33.2]
B154	Output, inverter 6	INV6 Outp	[33.2]
B155	Output, inverter 7	INV7 Outp	[33.2]
B156	Output, inverter 8	INV8 Outp	[33.2]
B157	Output, EXCLUSIVE-OR gate with 2 inputs 1	EXOR1 Outp	[33.5]
B158	Output, EXCLUSIVE- OR gate with 2 inputs 2	EXOR2 Outp	[33.5]

Binector	Name, Description	Selection Text	Block diag.
B159	Output, EXCLUSIVE- OR gate with 2 inputs 3	EXOR3 Outp	[33.5]
B160	Output, NAND gate with 3 inputs 1	NAND1 Outp	[33.8]
B161	Output, NAND gate with 3 inputs 2	NAND2 Outp	[33.8]
B162	Output, NAND gate with 3 inputs 3	NAND3 Outp	[33.8]
B163	Output, NAND gate with 3 inputs 4	NAND4 Outp	[33.8]
B164	Output, NAND gate with 3 inputs 5	NAND5 Outp	[33.8]
B165	Output, NAND gate with 3 inputs 6	NAND6 Outp	[33.8]

RS flipflops			
B166	RS flipflop 1 output Q	RS flflp1 Q	[34.2]
B167	RS flipflop 1 output $\overline{Q}$	RS flflp1/Q	[34.2]
B168	RS flipflop 2 output Q	RS flflp2 Q	[34.2]
B169	RS flipflop 2 output $\overline{Q}$	RS flflp2/Q	[34.2]
B170	RS flipflop 3 output Q	RS flflp3 Q	[34.2]
B171	RS flipflop 3 output $\overline{Q}$	RS flflp3/Q	[34.2]
B172	RS flipflop 4 output Q	RS flflp4 Q	[34.4]
B173	RS flipflop 4 output $\overline{Q}$	RS flflp4/Q	[34.4]
B174	RS flipflop 5 output Q	RS flflp5 Q	[34.4]
B175	RS flipflop 5 output $\overline{Q}$	RS flflp5/Q	[34.4]
B176	RS flipflop 6 output Q	RS flflp6 Q	[34.4]
B177	RS flipflop 6 output $\overline{Q}$	RS flflp6/Q	[34.4]
B178	RS flipflop 7 output Q	RS flflp7 Q	[34.6]
B179	RS flipflop 7 output $\overline{Q}$	RS flflp7/Q	[34.6]

D flipflops			
B180	D flipflop 1 output Q	D flflp1 Q	[34.8]
B181	D flipflop 1 output $\overline{Q}$	D flflp1 /Q	[34.8]
B182	D flipflop 2 output Q	D flflp2 Q	[34.8]
B183	D flipflop 2 output $\overline{Q}$	D flflp2 /Q	[34.8]

Timers			
B184	Output, timer 1	Timer1 Out	[35.3]
B185	Output, timer 2	Timer2 Out	[35.5]
B186	Output, timer 3	Timer3 Out	[35.8]
B187	Output, timer 4	Timer4 Out	[35.3]
B188	Output, timer 5	Timer5 Out	[35.5]

Binary signal switches			
B189	Output, binary signal switch 1	BiSwitc1Out	[35.2]
B190	Output, binary signal switch 2	BiSwitc2Out	[35.4]
B191	Output, binary signal switch 3	BiSwitc3Out	[35.6]
B192	Output, binary signal switch 4	BiSwitc4Out	[35.8]

Simple ramp-function generator			
B193	Ramp-function generator output = Ramp-function generator input (y = x)	SiRFG y=x	[30.4]
B194	0 = Ramp-function generator initial run-up	SiRFG Init	[30.4]

Binector	Name, Description	Selection Text	Block diag.
Message monitoring			
B195	COM BOARD: Message monitoring timeout - continuous signal	COM Interr	[18.4]
B196	COM BOARD: Message monitoring timeout - 1s pulse	COM Intpuls	[18.4]
B197	USS: Message monitoring timeout - continous signal	USS Interr	[16.4]
B198	USS: Message monitoring timeout - 1s pulse	USS Intpuls	[16.4]
B199	Peer-to-Peer: Message monitoring timeout - continous signal	PeerInterr	[17.4]
B200	Peer-to-Peer: Message monitoring timeout - - 1s pulse	PeerIntpuls	[17.4]

6 Start-up and Parameterization

1. Inserting the supplied memory module (EPROM)

When handling the EPROM, please observe the guidelines for handling components which can be damaged by electrostatic discharge (see pages 0-5).

Insert the EPROM in the base provided on the T100. It is essential to ensure that the notch on the EPROM is aligned with the marking on the board (see diagram). Check to ensure that all terminal pins of the EPROM are inserted correctly in the socket.

Caution: Connecting the power to the board when the EPROM is inserted incorrectly will destroy the module!

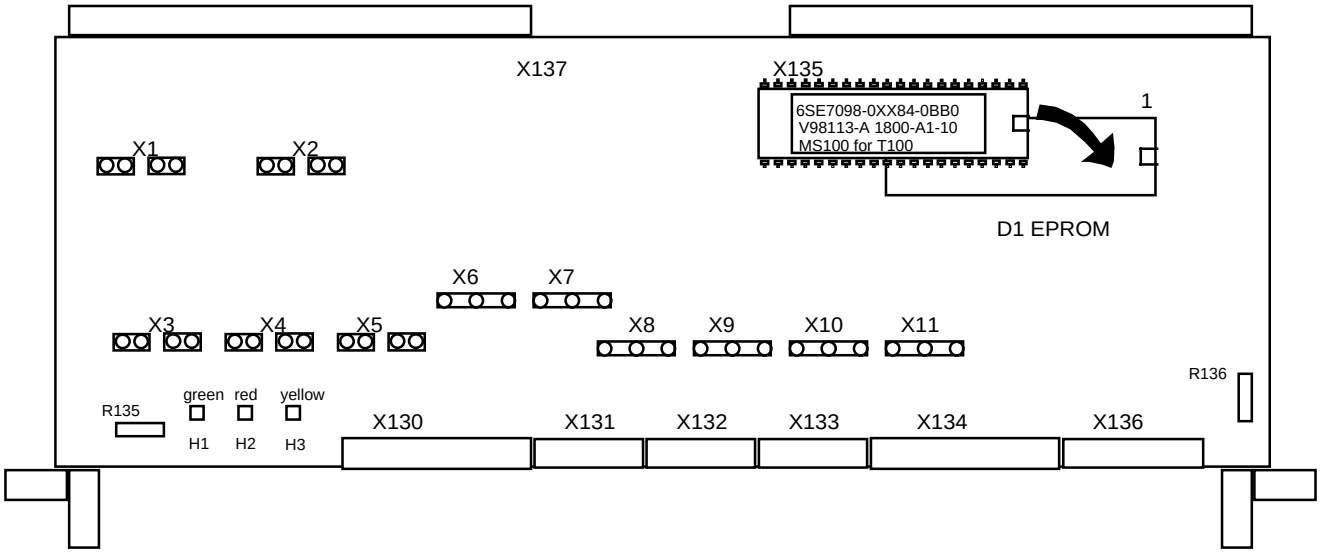

2. Checking the hardware requirements

Check the information given in Chapter 1.4 to ensure that all hardware requirements are met for operating the T100.

3. Installing the technology board in the electronics box

See Chapter 2.2 of hardware operating instructions.

Note: The technology board must be inserted in board location 2 (RIGHT-HAND SIDE of electronics box) of the electronics box.

After connection of the supply voltage, the red LED on the T100 technology board flashes (= fault-free cyclic operation).

4. Starting up the basic converter unit

It is advisable to start up the basic converter unit separately according to its operating instructions (operation, for example, via the PMU) before you start up the T100.

5. Selecting the technology board
(Board need only be selected explicitly on old series MASTERDRIVES FC / VC / SC (1995 - 1997); on new series converters, all supplementary boards are registered by an automatic hardware detection function.)

The T100 is selected by choosing "Hardware configuration" of the basic converter unit. The T100 can be selected in the "Switch-on inhibit", "Ready to switch on" and "Fault" states.

Selection sequence:

⇓ P052 = 4 Select hardware configuration function

⇓ P051 = 3 Select "Expert mode" access level

⇓ P090 = 2 Select TECH BOARD T100 in location 2

⇓ Other parameters depending on option board in location 3 (see appropriate operating instructions or parameter list of basic unit).
E.g.
P091 = 1 Select CB in location 3
P091 = 3 Select SCB in location 3
P091 = 0 If no COM BOARD is installed

Note: If you wish to install a communications board in a configuration which already includes a T100, you must deselect the T100 first (P090=0) and then log in the T100 and the communications board simultaneously.

⇓ P052 = 0 Select return function

⇓ P key The operational display (r000) is output while parameters and internal quantites are re-assigned.
The T100 technology board is initialized.
If fault message F080 / F081 appears, refer to Chapter "Faults and alarms" in the operating instructions of the basic converter unit.
When the board is fully initialized, the yellow LED on the T100 flashes (3Hz).
If a communications board is selected, the green LED must also flash (see Chapter 1.2).

⇓ The operational display "Switch-on inhibit" (008) or "Ready to switch on" (009) appears.

6. Learning to work with T100 parameters

You need to be familiar with the parameterization procedures for the T100. It is essential to follow the instructions in Chapter 4.1 if you want to work with the operator panel (PMU or OP1) or Chapter 9 if you want to use the SIMOVIS service program.

By way of a trial run, read parameters d002 and H101 out of the T100 (see list of parameters in Chapter 4).

7. Setting technology board parameters (H parameters) to their factory settings (defaults)

IMPORTANT !

- Before you begin starting up the T100, you must set the H parameters to their original factory settings according to Chapter 3.9 and parameter H970. The MS100 cannot be guaranteed to operate correctly if you fail to set the H parameters to their factory values.
- Check that any SLB (SIMOLINK) interface or CBx boards (communications interfaces) have been mounted in the correct board locations as specified in Chapter 1.4.

Now use SIMOVIS to upread the technology parameters in their factory settings if you intend to create "comparison files" of modified parameters later on.

8. Setting the parameters of the technology board

Operational sequence:

⇓ H051 = 1 Select "Standard mode" access level

⇓ Set parameters according to plant configuration
Please refer to the configuration example described in Chapter 10 as a guide.

⇓ Test functions

⇓ Archive the parameter setting (e.g. with d990 or SIMOVIS)

⇓ H051 = 0 Set "Read only" status for d and H parameters (access disabled for unauthorized users)

9. Common questions and answers

Question 1: The MASTER DRIVES basic unit does not accept any setpoints or control commands from the T100. What could be the cause?

Answer:
- Check whether bit 10 in control word 1 to the basic unit is set to "1" ("Control requested"; e.g. via H272.11=1 and H270=2; see block diagram, sheet [11]),
- Check whether you have switched over the data sets in the basic unit by mistake (check, for example, r012, r013, r410, P590 etc. on the SIMOVERT VC / MC).

Question 2: Why is the comfort ramp-function generator not working properly?

Answer: Check whether the following enable conditions are satisfied:
- Ramp-function generator enabled = 1 (e.g. H368 = 1)
- Ramp-function generator disabled = 0 (e.g. H362 = 0)

Question 3: The wobble generator does not work. What could be the cause?

Answer: The wobble generator only works if:
- the wobble amplitude is set to H421 > 0
- the wobble enable command has been issued (e.g. with H420 = 1)
- an unmodulated setpoint with a value other than zero is applied, e.g. via H418=1

Question 4: Signals are not being processed on the T100 in keeping with the parameter settings. What could be the cause?

Answer: Check whether you have activated parameter set switchover on the T100 by mistake (see block diagram, sheet [36] and d080).

Question 5: I can’t accelerate or decelerate the motorized potentiometer. What should I do?

Answer: If you want to operate the motorized potentiometer "offline" (i.e. without the motor), you must set the "tens" digit of H400 to "1" (e.g. H400 = 0111).
The motorized potentiometer may malfunction if the H parameters have not been set to their factory values as described in Chapter 6, paragraph 7.

Question 6: The T100 will not accept any setpoints or control commands from the CB (communications board, e.g. PROFIBUS). What should I do?

Answer: You should use word 1 of the CB as the control word and set it to at least "1"; see note <2> on block diagram, sheet [18].

7 Procedure for Replacing Software or T100 Board

- To remove or install the T100 technology board, please follow the instructions given in Chapter 5 of the hardware operating instructions.

- Before installing new software, make a note of how the H parameters are set or create a "Download file" using SIMOVIS.

- Replace EPROM or T100.
  In the case of any fault message, switch to parameterization mode by actuating the P and Raise keys. Set the parameters to factory setting in H970, following the instructions given in Chapter 3.9 and parameter H970. Acknowledge any fault message by pressing the P key.

- Enter the H parameter settings from the old T100 or from the old software version (set parameters using the "Download" function of the "Download file" created above by means of SIMOVIS or set manually to the project-specific H parameter values noted above). Please refer to paragraph 5 ff. in Chapter 6 for further details.

8 Faults and Alarms

8.1 Fault messages

General information about malfunctions

The T100 generates fault messages F116 to F147 (see block diagram [8] and the table below). The mechanisms for further handling, storage of diagnostic data and acknowledgement of a technology fault are the same as for malfunctions in the basic unit.

The following information is available for every malfunction (see Instruction Manual for basic unit):

Parameters	r947	Fault number
	d951	Fault text list
	P952	Number of malfunctions
	r748	Duration of malfunction

If a fault message is not acknowledged before the electronics power supply is disconnected, then it will be output again when the supply voltage is next switched on. The unit will not operate unless this message is acknowledged. (Exception: F008 and automatic restart is selected, refer to P366)

Diagnostic LEDs

Some types of hardware fault can be diagnosed with the aid of the three LEDs on the T100, see Chapter 1.2.

Fault messages		
Fault No.	**Description**	**Possible causes Remedial measures**
F116	**Fault H312** See parameter H312	- Check H312 (see sheet 18 of block diagram) - Check selected binector
F117	**Fault H297** See parameter H297	- Check H297 (see sheet 16 of block diagram) - Check selected binector
F118	**Fault H305** See parameter H305	- Check H305 (see sheet 17 of block diagram) - Check selected binector
F119	**COM ConnInt** Connection between T100 and COM BOARD interrupted	
F120	**Fault H260** See parameter H260	- Check H260 (see sheet 8 of block diagram) - Check selected binector
F121	**Fault H261** See parameter H261	- Check H261 (see sheet 8 of block diagram) - Check selected binector
F122	**Fault H262** See parameter H262	- Check H262 (see sheet 8 of block diagram) - Check selected binector
F123	**Fault H263** See parameter H263	- Check H263 (see sheet 8 of block diagram) - Check selected binector
F142	**DataSavErr** The converter power supply unit is repeatedly signalling "Electronics undervoltage"	- Check electronics supply voltage (e.g. auxiliary power supply via X9 of converter)
F143	**ADC AdjErr** The factory-set correction values for adjustment of the analog inputs and outputs are incorrect	- Replace T100 board
F144	**EEPROM def.** Software monitoring of correct functioning of EEPROM module (non-volatile storage of type X28C64, 8192 bytes)	- Hardware defect - Severe EMC disturbances - Measures: Replace T100 board Check EMC precautions.
F145	**ParamError** Error in handling parameter(s) Software monitoring of permissible value range of parameters	- Software has been replaced - Excessive EMC interference (e.g. owing to lack of snubber circuits for contactors, unscreened cables, loose screen connections, ...) - Measures: Acknowledge fault Check EMC precautions Set parameters to factory settings (Chapter 3.9) Start up unit again
F146	**Watchdog** Watchdog timer has initiated a RESET A hardware counter integrated in the microprocessor monitors correct execution of the program.	- T100 board defective - Excessive EMC interference (e.g. owing to lack of snubber circuitry for contactors, unscreened cables, loose screen connections)
F147	**Intern.Err** Illegal microprocessor state A hardware monitor integrated in the microprocessor monitors the microprocessor for illegal operational states	- T100 board defective - Excessive EMC interference (e.g. owing to lack of snubber circuitry for contactors, unscreened cables, loose screen connections)

8.2 Alarm messages

An alarm message is output periodically in the form of "A" (Alarm) and a three-digit number in the operational display on the PMU screen. An alarm cannot be acknowledged, but is reset automatically when the cause of the problem has been eliminated. Several alarms can be active at the same time. They are then displayed successively.
When the converter is being operated with the OP1 operator panel, the alarm is output on the bottom line of the operational display. The red LED flashes simultaneously (see operating instructions for OP1).

The T100 generates alarm messages A097 to A104 (see block diagram, sheet [9] and the table below). The mechanisms for handling and signalling a technology alarm are the same as for alarm messages in the basic unit (see Instruction Manual for basic unit, especially r959).

Alarm messages			
Alarm No.	**Parameter No.** ____ Bit Nr.	**Description**	**Remedial measures**
A097 From SW1.1	**d959** ____ 0	**Alarm A097** A spontaneous message cannot be issued to the basic unit, as the previous spontaneous message has not yet been picked up by the basic unit.	
A098 From SW1.1	**d959** ____ 1	**Alarm A098** A spontaneous message cannot be issued to the COM BOARD, as the previous spontaneous message has not yet been picked up by the COM BOARD.	
A099 From SW1.1	**d959** ____ 2	**Alarm A099** A spontaneous message cannot be issued to the USS interface, as the previous spontaneous message has not yet been acknowledged by the USS master.	
A100	**d959** ____ 3	**Alarm A100** See parameter H264	- Check H264 (see sheet 9 of block diagram) - Check selected binector
A101	**d959** ____ 4	**Alarm A101** See parameter H265	- Check H265 (see sheet 9 of block diagram) - Check selected binector
A102	**d959** ____ 5	**Alarm A102** See parameter H266	- Check H266 (see sheet 9 of block diagram) - Check selected binector
A103	**d959** ____ 6	**Alarm A103** See parameter H267	- Check H267 (see sheet 9 of block diagram) - Check selected binector
A104	**d959** ____ 7	**Alarm A104** Comfort ramp-function generator parameter sets 2 and 3 are selected simultaneously	- Check H370 and H371 - Check selected binector



9 SIMOVIS

9.1 SIMOVIS for MASTERDRIVES MC / VC (new series from 1997 / 98) and for SIMOREG 6RA70

All versions of SIMOVIS for these devices support all types of technology board (including the T100) and share a common user interface with the SIMOVIS for the basic converters. There is thus no need to install separate SIMOVIS programs for the technology boards.

This board and version "neutrality" is afforded by the fact that SIMOVIS can read all existing technology parameters, plus their descriptions and identifiers, out of the technology board in a "teach-in" process. A technology parameter database and a parameter definition file for UPREAD / DOWNLOAD operations are set up during the teach-in run.

Please refer to the relevant SIMOVIS Operating Instructions for further information about SIMOVIS functions for specific technology boards.

You can select your chosen display language for abbreviated technology parameter names in parameter H050.

9.2 SIMOVIS for old series MASTERDRIVES FC / VC / MC (from 1995) with integrated technology board support (available from mid-1996)

All the service functions for the technology boards in the SIMOVIS of the basic unit are available as of the following versions of the SIMOVIS service programs for the basic units:

- SIMOVIS Version V1.2b for SIMOVERT FC
- SIMOVIS Version V1.2b for SIMOVERT VC
- SIMOVIS Version V1.1b for SIMOVERT SC
- SIMOVIS Version V1.2 for the SIMOVERT infeed/regenerative feedback unit.

These SIMOVIS versions support all technology boards (including the T100) and share a common user interface with the SIMOVIS of the basic units. There is thus no need to install separate SIMOVIS programs for the technology boards.

All the existing technology parameters, their descriptions and their identifiers can if desired be "learned" with the teach-in function in the "Bus Configuration" screen form and the USS protocol. This ensures type and version neutrality. The parameter database is updated and a parameter definition file is created for upread and download operations.

The next 10 available technology parameters, starting with a selectable parameter number, can be displayed on a separate screen. You can observe them or alter their settings there. You can also call up a "Free Parameters" screen, on which you can view and modify up to 8 freely selectable r and H parameters.

You can find further information in the ANLEITNG.WRI (Windows Write format) and ANLEITNG.TXT (ASCII format) files on the SIMOVIS installation disk for the basic unit.

As of software version 1.1 of the MS100, you can select the language for the abbreviated parameter names that appear on the screen in parameter H050.

D A N G E R ! ! !

The machine must always be stationary when the technology boards are downloaded!

There is always a risk that irregular, transient signals will be sent to the binary and analog output terminals of the technology board or to the SIMOVERT basic unit during a download operation, causing the drive to start up. You should therefore always set the drive to a safe operating condition before you begin downloading, e.g. by carrying out the following steps:

- **Disconnect the power supply to the converter or the motor**
- **Disconnect the control voltage**
- **Apply the brake manually, disengage the motor, etc.**

9.3 Special SIMOVIS for T100 (supplied up until 1996)

The special SIMOVIS for MS100 software version 1.0 can also be used for higher software versions. The new functions (parameters) that have been added since software version 1.0 will not be available, however.
In versions 1.1 to 1.3, this applies to parameters H050, H224, H413, H414, H750 and H917.

10 Configuring Example

Sheet 1 gives a realistic example of how the T100 can be configured.

The example is applicable to new series MASTERDRIVES VC / MC (from 1997 / 98). The same example applies analogously to old series SIMOREG 6RA70 and MASTERDRIVES (from 1995), although some of the basic unit parameter settings are different.

The example drive is part of a multi-motor network used in the processing of strip materials. The drive is operating as a slave within a setpoint cascade which is fully digitized on the basis of peer-to-peer connections.

An automation system - which is linked via the PROFIBUS DP with the drives - is included in the configuration for the purpose of "recipe inputs" (speed relations) and for higher-level control, operator control inputs and visualization. The drive has a path tension control implemented via a dancing roller. The dancing roller potentiometer is connected to analog input terminals 50/51 and outputs an actual value signal to the technology controller on the T100 which operates as a dancing controller. A torque-indicating measuring instrument is connected to analog output terminals 61/62.

Sheets 2 to 4 show a detailed block diagram of the T100 for the configuring example which also indicates the most important parameter settings. The square brackets contain the reference to the relevant sheet in the block diagram (Chapter 2).

Dancer controller (sheet 2)

The dancer controller actual value from analog input terminals 50/51 can be viewed in display parameter d010 and is available at connector K003. It is supplied to the technology controller via H330.1=003. The setting H351=x0xx ensures that the dancer actual value is controlled via the D element adjusted in H332. This arrangement is used to advantage with dancer controls to dampen the dancer roller. The technology controller setpoint is fixed to a value of 0% through the setting H334.1=0 (corresponds to dancer neutral position, dancer potentiometer supplies 0V).

Output K088 of the technology controller is added to the speed setpoint K120 via the setting H430=088. The adder output (sheet [25] of block diagram) produces the total setpoint K105. The technology controller uses the speed compensation value K008 to ensure that the dancer is kept constantly in its neutral position.

Peer-to-peer connection (sheet 2)

The serial peer-to-peer interface (terminals 70 to 73) operates at a baud rate of 187.5 kbd (H302=13) in this configuring example. Data are exchanged by means of a 2-word message (H303=2) in both the receive and transmit directions. Other parameter settings are shown in the box entitled "Configuration of peer interface" on Sheet 2.
The drive receives the velocity setpoint K057 and the acceleration value K058 from the preceding drive in the group via the peer-to-peer connection. Both received signals are multiplied by the VELOCITY RELATION K063 (PROFIBUS "stretch" factor) and brought out at the peer send output.
The speed setpoint K120 obtained in this way is added to the dancer position controller output, producing the effective total speed setpoint K105 for the drive. The acceleration value K121 is applied to the basic converter as an acceleration feedforward torque.

Process data exchange via the PROFIBUS (sheet 3)

To allow communication via the Profibus, message type "PP0 type 2" is selected by setting P712=2, i.e. both the transmit and the receive messages contain 4 parameter words and 6 process data words. Slave bus address 28 is selected by setting P918=28. No further details are given below about the parameter section of the message via which all basic converter and T100 parameters can be read and written.

The 6 process data words of the Profibus messages are available at connectors K062 ... K067 (sheet 18 of block diagram). Receive word 2 is applied to the two multipliers on sheet 2 as velocity relation K063. Receive words 1

and 4 include the two control words K062 and K065 from which control bits B064 "DRIVE ON/OFF1" and B080 "ENABLE TECHNOLOGY CONTROLLER" are extracted via connector/binector converters.

The connectors to be entered in the Profibus transmit messages can be selected in parameter H311 (indices .01 to .06). The basic converter status word 1 is linked to transmit word 1 via H311.01=034 and the speed actual value to transmit word 2 via H311.02=038.

The dancer position actual value K003 from analog input terminals 50/51 is taken to transmit word 3 via H311.03=003. Status bit B311 "TECHNOLOGY CONTROLLER AT OUTPUT LIMITATION" is entered in bit position 0 of connector K073 which is applied to transmit word 4 by means of a binector/connector converter.

Data exchange with the Master Drives basic converter (sheet 4)

Only bits 0 and 10 of the basic converter control word 1 are supplied by the T100. The connection of the other bits can remain in the factory setting state (see P554 to P575). The OFF1 command B064 of the Profibus is taken to bit 0 via setting H272.01=064. This command is connected on in the basic converter via setting P554=3100. Bit 10 is connected permanently to 1 via setting H272.11=1, i.e. command "Control requested" is continuously active. This is the basic prerequisite for the basic converter accepting control commands and setpoints from the T100.

The speed controller setpoint is specified in the basic converter via setting H275.01=105 and P443=3002. The acceleration feedforward torque K121 is injected after the speed controller as a supplementary torque setpoint via settings H275.04=121 and P433=3006. The torque K024 generated in the basic converter is taken to the T100 where it is available as K039. The torque is output to the measuring instrument connected to terminal 61 via setting H150=047.

The speed actual value K091 is "wired" to connector K038 on the T100 via setting P734.02=148 and is finally output in the Profibus transmit message. Owing to parameter setting P734.01=32, basic converter status word 1 is available for further connection to the Profibus as connector K034 (sheet 3).

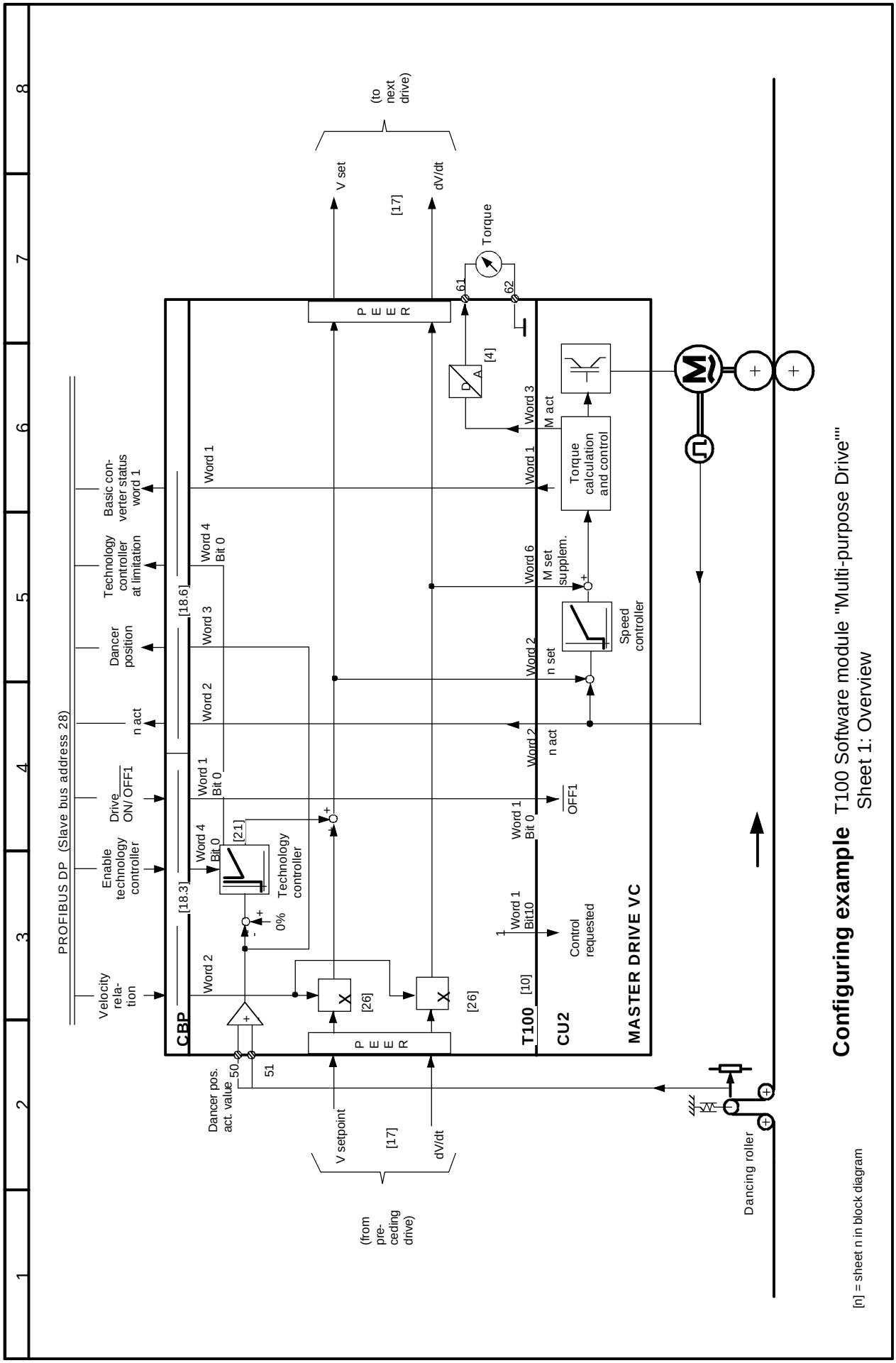
Configuring example T100 Software module "Multi-purpose Drive"
Sheet 1: Overview
[n] = sheet n in block diagram
MASTER DRIVE VC
CU2
T100
CBP
PROFIBUS DP (Slave bus address 28)
Velocity relation
Drive ON/ OFF1
Enable technology controller
n act
Dancer position
Technology controller at limitation
Basic converter status word 1
Word 1
Word 2
Word 3
Word 4
Bit 0
Bit10
[18.3]
[18.6]
[21]
Technology controller
0%
[10]
Control requested
OFF1
n set
Speed controller
M set supplem.
Word 6
M act
Torque calculation and control
Word 1
Word 2
Word 3
[4]
Torque
61
62
[17]
V set
dV/dt
(to next drive)
[26]
PEER
Dancer pos. act. value
50
51
V setpoint
(from preceding drive)
Dancing roller

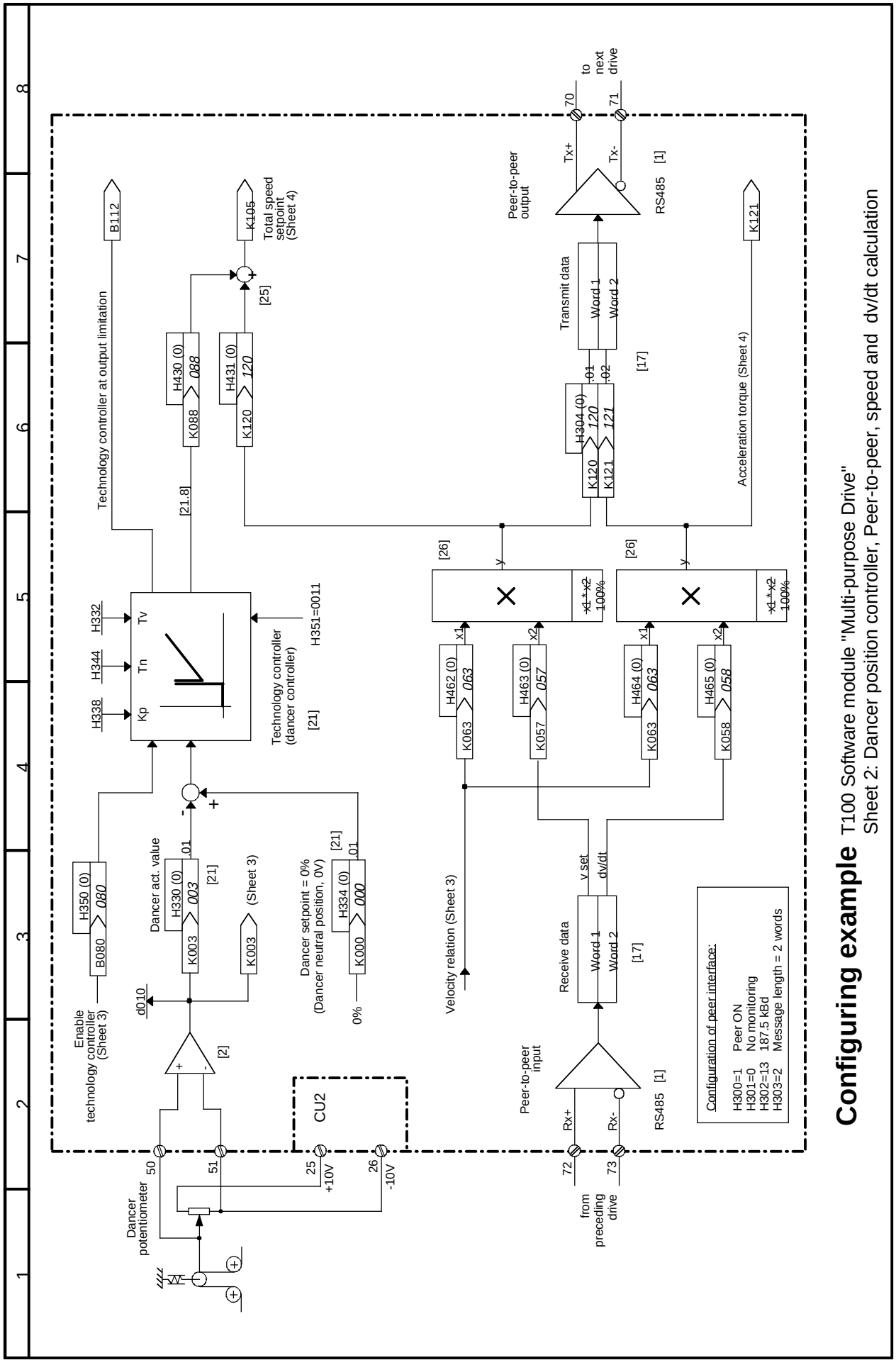
Configuring example T100 Software module "Multi-purpose Drive"
Sheet 2: Dancer position controller, Peer-to-peer, speed and dv/dt calculation
Technology controller at output limitation
B112
Total speed setpoint (Sheet 4)
K105
[25]
H430 (0) 088
K088
H431 (0) 120
K120
[21.8]
Peer-to-peer output
Tx+
Tx-
70
71
to next drive
RS485 [1]
Transmit data
Word 1
Word 2
.01
.02
[17]
H304 (0) 120 121
K120
K121
Acceleration torque (Sheet 4)
K121
[26]
y
x1
x2
-1 * x2 100%
H462 (0) 063
K063
H463 (0) 057
K057
H464 (0) 063
K063
H465 (0) 058
K058
Velocity relation (Sheet 3)
Receive data
Word 1
Word 2
[17]
v set
dv/dt
Peer-to-peer input
Rx+
Rx-
72
73
from preceding drive
RS485 [1]
Configuration of peer interface:
H300=1 Peer ON
H301=0 No monitoring
H302=13 187.5 kBd
H303=2 Message length = 2 words
H332
H344
H338
Tv
Tn
Kp
Technology controller (dancer controller)
[21]
H351=0011
H350 (0) 080
B080
Enable technology controller (Sheet 3)
d010
[2]
Dancer act. value
H330 (0) 003
K003
.01
[21]
(Sheet 3)
K003
Dancer setpoint = 0% (Dancer neutral position, 0V)
H334 (0) 000
K000
0%
CU2
+10V
-10V
25
26
50
51
Dancer potentiometer
1
2
3
4
5
6
7
8

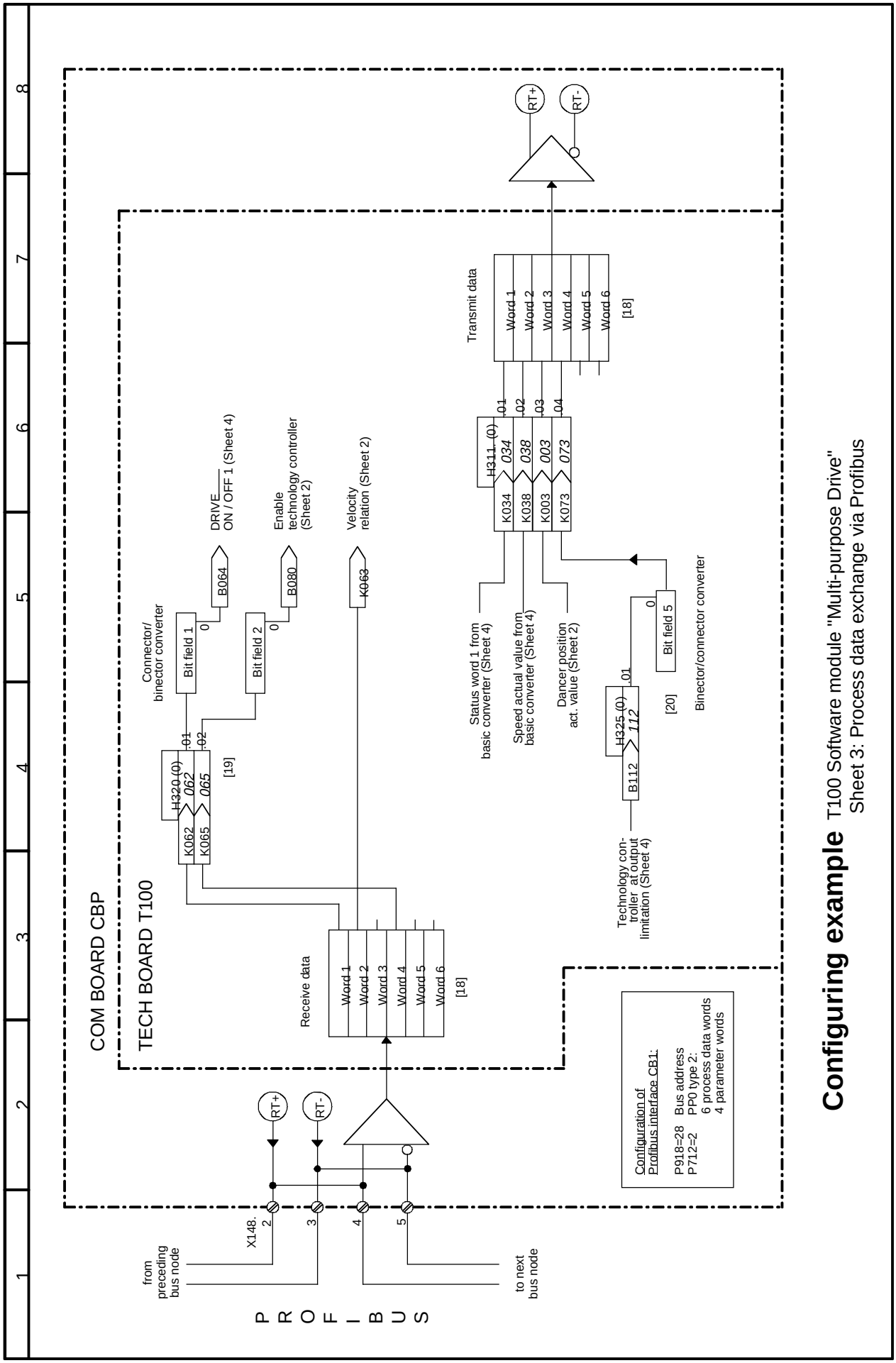
COM BOARD CBP
TECH BOARD T100
PROFIBUS
from preceding bus node
to next bus node
X148.
RT+
RT-
Receive data
Word 1
Word 2
Word 3
Word 4
Word 5
Word 6
[18]
Transmit data
[19]
[20]
Connector/ binector converter
Bit field 1
Bit field 2
Bit field 5
DRIVE ON / OFF 1 (Sheet 4)
Enable technology controller (Sheet 2)
Velocity relation (Sheet 2)
Status word 1 from basic converter (Sheet 4)
Speed actual value from basic converter (Sheet 4)
Dancer position act. value (Sheet 2)
Technology con- troller at output limitation (Sheet 4)
Binector/connector converter
H320 (0) 062 065
H311. (0) 034 038 003 073
H325 (0) 112
K062 K065 K034 K038 K003 K073
B064 B080 K063 B112
Configuration of Profibus Interface CB1:
P918=28 Bus address
P712=2 PPO type 2:
6 process data words
4 parameter words
Configuring example T100 Software module "Multi-purpose Drive"
Sheet 3: Process data exchange via Profibus

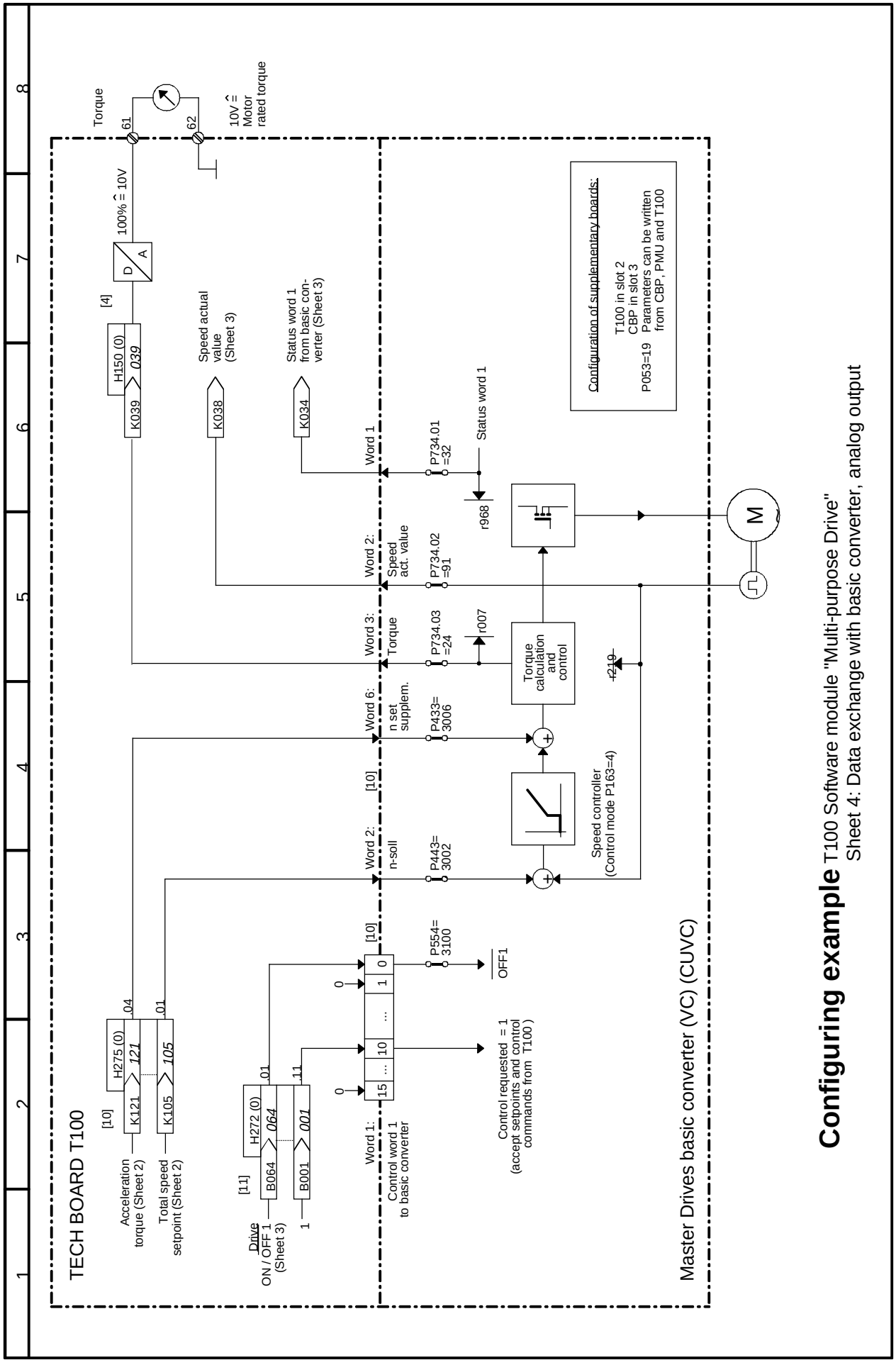

Configuring example T100 Software module "Multi-purpose Drive"
Sheet 4: Data exchange with basic converter, analog output

11. Index of Available Instruction Manuals and Software Components for T100

Item	Designation	Order No. (MLFB)	SIEMENS-internal order processing location
/1/	Hardware Operating Instructions for T100 Technology Board (additional requirements only; already included in T100 scope of supply); Available in 5 languages	6SE7080-0CX87-0BB0	ASI 1 Erlangen, F80
/2/	Manual for Software Module MS100 "Multi-Purpose Drive" for T100 Board German English French Spanish Italian	 6SE7080-0CX84-0BB0 6SE7087-6CX84-0BB0 6SE7087-7CX84-0BB0 6SE7087-8CX84-0BB0 6SE7087-2CX84-0BB0	ASI 1 Erlangen, F80
/3/	Specification "Universal Serial Interface Protocol, USS® Protocol" German English	 E20125-D0001-S302-A1 E20125-D0001-S302-A1-7600	AUT WKF RZF Fürth Dept. B9.2 Ms. Schmitt Tel. ++49911/750-2958 Fax ++49911/750-2299
/4/	Block package "DVA_S5", Communications Blocks for SIMATIC S5 AG115U, 135U and 155U with SIMOREG and SIMOVERT Drives via SINEC L2-DP and USS Protocol. (3.5" diskette for S5-DOS including German/English user manual (see item /5/))	6DD1 800-0SW0	AUT WKF RZF Fürth Dept. B1.3 Mr. Heydorn Tel. ++49911/750-9382 Fax ++49911/750-9155
/5/	User manual "Function Blocks for SIMATIC S5 AG115U, 135U, 155U User Data Exchange with SIMOREG and SIMOVERT Drives via USS® Protocol" (already included in scope of supply of item /4/) German English	 E20125-C0005-S302-A1 E20125-C0005-S302-A1-7600	AUT WKF RZF Fürth Dept. B9.2 Ms. Schmitt Tel. ++49911/750-2958 Fax ++49911/750-2299
/6/	Operating Instructions "SIMOVERT Master Drives, Application of Serial Interfaces with USS® Protocol" German/English	 6SE7087-6CX87-4KB0	ASI 1 Erlangen, F80
/7/	PROFIBUS Profile for Variable-Speed Drives, PROFIDRIVE January 1997 Edition	3.071	PROFIBUS Nutzerorganisation e.V. Haid-und-Neu-Strasse 7, D76131 Karlsruhe Tel.: ++49(0)721-9658-590 FAX: ++49(0)721-9658-589

12 Changes

12.1 Software version 1.0 (available as of approx. 08.95):

Original version (first officially released software version)

12.2 Software version 1.1 (available as of approx. 05.97):

New functions vis-à-vis V1.0:

- Automatic implementation ("optimization run") of the optimum processing sequence of the function blocks (see parameter H750 = 2)
- Spontaneous messages (with USS and in DPRAM)
  (see parameter H917)
- Parameter texts now also available in English, French, Spanish and Italian (for OP1 and SIMOVIS)
  (see parameter H050)
- New function block "B160 - fixed setpoint" H224 (-32768 to +32767) mapped to K177
- Motorized potentiometer (F670):
  K180: Motorized potentiometer input (new connector)
  H413, H414: The motorized potentiometer output can now be limited by means of the new parameters H413 and H414

Modified functions vis-à-vis V1.0:

- dy/dt for comfort ramp-function generator (F1010) and motor potentiometer (F670):
  Before: dy/dt was set to = 0 if input rate of rise < RFG ramp,
  because the RFG has always expired in this case
  Now: dy/dt = gradient of input signal if this gradient < RFG ramp
- Fixed-setpoint parameters H210 to H223:
  Before: Confirmation parameters, could be modified in UHAB states
  Now: Not confirmation parameters, can be modified in UHABR states
- Analog inputs:
  Improved suppression of EMC interference through multiple scans, reduction in ripple
  The calculation of the input value for the "current input 4...20mA and normalization <> 100%" setting has been corrected
- Analog outputs:
  Improved accuracy
- Comfort ramp-function generator (F1010):
  The action of the "ramp-function generator tracking" function when the positive limit has a negative value and/or the negative limit has a positive value has been improved.
  The accuracy of the rounding times has been improved.
  The identifiers for parameters H370 and H371 on the display (OP1 and SIMOVIS) have been corrected.
- USS protocol:
  The performance of the telegram failure-time monitor has been improved for bus cycle times of less than approx. 20 ms.
  The performance for operation without a PKW component (H295 = 0) has been improved.
  The performance when faulty telegrams are detected on the bus (e.g. response messages from other bus nodes) has been improved.
- Motorized potentiometer (F670):
  Before: Minimum settable ramp-up/ramp-down time (H402/H403) = 0.00 s
  Now: Minimum settable ramp-up/ramp-down time(H402/H403) = 0.01 s

- P-gain adaptation factor for speed controller (with F1670, word 10):
  The transfer of the P-gain adaptation factor to the basic unit has been corrected (factor 16).
- Speed → velocity calculator (B50):
  The accuracy of the calculations has been improved

List of new or modified parameters:

- H050 Setting range unchanged; other languages now supported. The abbreviated parameter names on the OP1 and in SIMOVIS are now available in 5 languages.
- H224 New ! Fixed setpoint for K180: -32768 ... 32767
- H413 New ! Upper limit for motorized potentiometer
- H414 New ! Lower limit for motorized potentiometer
- H750 Setting range now 0 ... 2 instead of 0 ... 1
  Optimization run now possible for sampling sequence
- H917 New ! Spontaneous messages now available

List of new connectors:

- K180 Fixed setpoint (H224)
- K180 Input of ramp-function generator in motorized potentiometer

12.3 Software version 1.2 (available as of approx. 08.96):

Modified functions vis-à-vis V1.1:

- Timers F1110 and F1290
  The following error associated with these two timers has been eliminated. In V1.0 and V1.1, a sporadic error occurs in timers F1110 and F1290 in the OFF delay modes (modes 1 and 3), i.e. they act as an OFF **and** ON delay with an ON delay time that is identical to the selected OFF delay time. Other timers were not affected by this problem.

12.4 Software version 1.3 (available as of approx. 08.97):

Modified functions vis-à-vis V1.2:

- USS protocol:
  The following problem in versions V1.0 to V1.2 has been eliminated: The very first response message from the T100 after connection of the electronics power supply included additional bytes containing 00H (number of these "scratch bytes" corresponds to length of PZD section). This results in overloading of some master interfaces, causing the communication link to crash, e.g. on the CP521 SI for the SIMATIC S5 PLCs, 100U, 95U etc. In software version 1.3 and later, the first message no longer contains any scratch bytes which might cause the SIMATIC to crash.
- USS protocol:
  The broadcast function has been improved ("Messages to all"): In software version 1.3, it is no longer necessary to send a normal point-to-point message between two broadcast messages for the sake of the master.
- Peer-to-peer protocol:
  The performance at baud rates 115.2 and 187.5 kBd and simultaneous operation of the USS interface has been improved (no more sporadic message failures).
- Display parameters d20 ... d29 for connectors and binectors:
  These display parameters can now also be "rewired" online in the R operating state (=RUN mode) via parameters H240 ... 253. Parameters H240 ... H253 could only be altered offline, i.e. in the U, H, A and B modes, in software versions 1.0 to 1.2.

- Simple ramp-function generator:
  The "Bypass simple-ramp function generator" function is now processed in the foreground (sampling time 2.2 msec) instead of the background (sampling time 20 msec).
- Comfort ramp-function generator:
  The switchover between ramp-function generator settings 1, 2 and 3 (as a function of binectors selected in H370 and H371) is now a foreground process (sampling time 2.2 msec) instead of a background process (sampling time 20 msec).
- Technology controller:
  The controller performance in response to extremely long integration times Ti (Ti = Tn/Kp), i.e. more than approximately 144 sec, has been improved.

New parameters, binectors and connectors:

– None

Important! Procedure for installing the MS100

1. Setting the H parameters to their factory settings

As specified in Section "Start-up" in the MS100 Manual, **it is absolutely essential** to set the T100 parameters (H parameters) to their factory (default) settings via H970 before a T100 is started up. The T100 cannot otherwise be guaranteed to operate correctly (any number of malfunctions are possible, e.g. motorized potentiometer output = 0 continuously, etc.)

2. Procedure for replacing software or board:

All versions of the MS100 are "backwards compatible" with earlier software versions! To install a new software version or T100 board in an existing system, you merely need to set the MS100 parameters to their factory settings via H970 and then re-enter the old parameter data of the T100 (H parameters), e.g. by means of the SIMOVIS download function.

The following editions have been published so far:

Edition	Internal Item No.
A	C98130-A1800-A1-01-7647
C	C98130-A1800-A1-03-7647
D	C98130-A1800-A1-04-7647
F	C98130-A1800-A1-06-7647

Edition **F** consists of the following chapters

Chapter		No. of pages	Date of issue
0	General	6	02.99
1	Description	4	02.99
2	Block Diagram	40	02.99
3	Function Descriptions	30	02.99
4	Parameter List	78	02.99
5	List of Connectors and Binectors	12	02.99
6	Start-up and Parameterization	4	02.99
7	Procedure for Replacing Software or T100 Board	2	02.99
8	Faults and Alarms	4	02.99
9	SIMOVIS	2	02.99
10	Configuring Example	6	02.99
11	Index of Available Instruction Manuals and Software Components for the T100 Board	2	02.99
12	Changes	4	02.99

Group
Elektronikwerk Wien (Vienna)
P.O. Box 83, A-1211 Vienna

Automation &Drives

Siemens Aktiengesellschaft

Subject to change without notice

Order No.: 6SE7087--6CX84-0BB1
Printed in Austria

Betriebsanleitung / Operating Instructions Ausgabe/Edition: AC

simovert masterdrives

SIEMENS

Tacho- und Synchronisierungs-Baugruppe
Tacho and Synchronising Board

Inhalt

1 DEFINITIONEN UND WARNUNGEN 1-1

2 PRODUKTBESCHREIBUNG 2-1

3 MONTIEREN, ANSCHLIEßEN 3-1

4 INBETRIEBSETZEN 4-1

4.1 Inbetriebsetzen Digitaltacho (SIMOVERT FC) 4-1

4.2 Inbetriebsetzen Synchronisieren (SIMOVERT VC) 4-2

4.3 Inbetriebsetzen Synchronisieren (SIMOVERT MASTERDRIVES Vector Control) 4-4

4.4 Inbetriebsetzung Netzynchronisieren (SIMOVERT MASTERDRIVES Vector Control) 4-6

5 TECHNISCHE DATEN 5-1

Contents

1 DEFINITIONS AND WARNINGS 1-1

2 PRODUCT DESCRIPTION 2-1

3 MOUNTING, CONNECTING-UP 3-1

4 START-UP 4-1

4.1 Start-up, digital tachometer (SIMOVERT FC) 4-1

4.2 Start-up, synchronization (SIMOVERT VC) 4-2

4.3 Start-up, synchronization (SIMOVERT MASTERDRIVES Vector Control) 4-4

4.4 Start-up, line synchronization (SIMOVERT MASTERDRIVES Vector Control) 4-6

5 TECHNICAL DATA 5-1

1 Definitions and Warnings

Qualified personnel

For the purpose of this documentation and the product warning labels, a "Qualified person" is someone who is familiar with the installation, mounting, start-up, operation and maintenance of the product. He or she must have the following qualifications:

- Trained or authorized to energize, de-energize, ground and tag circuits and equipment in accordance with established safety procedures.
- Trained or authorized in the proper care and use of protective equipment in accordance with established safety procedures.
- Trained in rendering first aid.

DANGER



indicates an **imminently** hazardous situation which, if not avoided, will result in death, serious injury and considerable damage to property.

WARNING



indicates a **potentially** hazardous situation which, if not avoided, could result in death, serious injury and considerable damage to property.

CAUTION



used with the safety alert symbol indicates a potentially hazardous situation which, if not avoided, may result in minor or moderate injury.

CAUTION

used without safety alert symbol indicates a potentially hazardous situation which, if not avoided, may result in property damage.

NOTICE

NOTICE used without the safety alert symbol indicates a potential situation which, if not avoided, may result in an undesirable result or state.

NOTE

For the purpose of this documentation, "Note" indicates important information about the product or about the respective part of the documentation which is essential to highlight.

WARNING



Hazardous voltages are present in this electrical equipment during operation.

Non-observance of the warnings can thus result in severe personal injury or property damage.

Only qualified personnel should work on or around the equipment

This personnel must be thoroughly familiar with all warning and maintenance procedures contained in this documentation.

The successful and safe operation of this equipment is dependent on correct transport, proper storage and installation as well as careful operation and maintenance.

NOTE

This documentation does not purport to cover all details on all types of the product, nor to provide for every possible contingency to be met in connection with installation, operation or maintenance.

Should further information be desired or should particular problems arise which are not covered sufficiently for the purchaser's purposes, the matter should be referred to the local SIEMENS sales office.

The contents of this documentation shall not become part of or modify any prior or existing agreement, commitment or relationship. The sales contract contains the entire obligation of SIEMENS AG. The warranty contained in the contract between the parties is the sole warranty of SIEMENS AG. Any statements contained herein do not create new warranties or modify the existing warranty.

Proper use of Siemens products

WARNING



Siemens products may only be used for the applications described in the catalog and in the relevant technical documentation. If products and components from other manufacturers are used, these must be recommended or approved by Siemens. Proper transport, storage, installation, assembly, commissioning, operation and maintenance are required to ensure that the products operate safely and without any problems. The permissible ambient conditions must be adhered to. The information in the relevant documentation must be observed.

CAUTION



Components which can be destroyed by electrostatic discharge (ESD)

The board contains components which can be destroyed by electrostatic discharge. These components can be easily destroyed if not carefully handled. If you have to handle electronic boards, please observe the following:

Electronic boards should only be touched when absolutely necessary.

The human body must be electrically discharged before touching an electronic board.

Boards must not come into contact with highly insulating materials - e.g. plastic parts, insulated desktops, articles of clothing manufactured from man-made fibers.

Boards must only be placed on conductive surfaces.

Boards and components should only be stored and transported in conductive packaging (e.g. metalized plastic boxes or metal containers).

If the packing material is not conductive, the boards must be wrapped with a conductive packaging material, e.g. conductive foam rubber or household aluminium foil.

The necessary ESD protective measures are clearly shown again in the following diagram:

- a = Conductive floor surface
- b = ESD table
- c = ESD shoes
- d = ESD overall
- e = ESD chain
- f = Cubicle ground connection

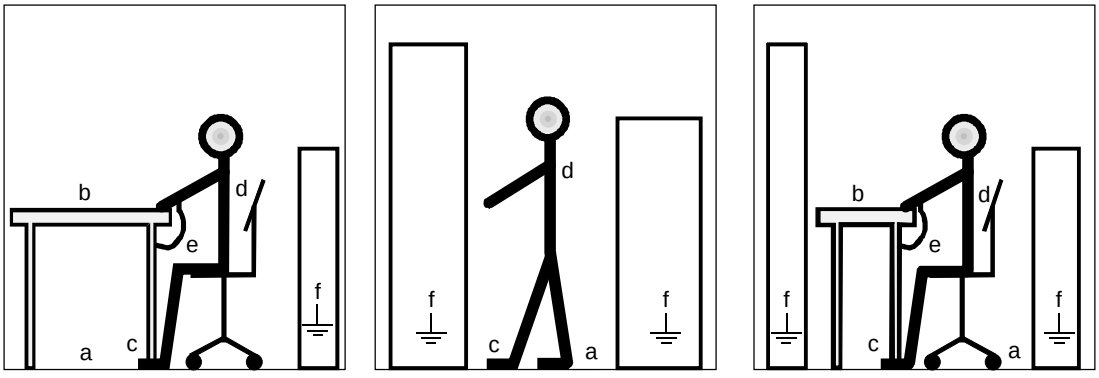

ESD protective measures

Residual risks of Power Drive Systems (PDS)

DANGER



The components for the controller and drive of a Power Drive System (PDS) are authorized for industrial and commercial use in industrial networks. Their use in public networks requires a different planning and/or additional measures.

It is only permissible to operate these components in enclosed housings or in superordinate control cabinets and when all protective devices and protective covers are used.

These components may only be handled by qualified and trained specialist persons who are familiar with and observe all the safety instructions on the components and in the relevant technical user documentation.

The machine manufacturer must take into account the following residual risks resulting from the components for the controller and drive of a Power Drive System (PDS) when evaluating the risk of his machine in accordance with the EC machinery guideline.

1. Undesired movements of driven machine components during commissioning, operation, maintenance and repair, e.g. as a result of
   - HW and/or SW errors in the sensors, controller, actuators and connection system
   - Reaction times of the controller and the drive
   - Operation and/or ambient conditions not compliant with the specification
   - Errors in parameterization, programming, wiring and installation
   - Use of radio units/mobile phones in the direct vicinity of the controller
   - External influences/damage.
2. Extraordinary temperatures and emissions of light, noises, particles and gases, e.g. as a result of
   - Component failure
   - Software errors
   - Operation and/or ambient conditions not compliant with the specification
   - External influences/damage.
3. Dangerous contact voltages, e.g. as a result of
   - Component failure
   - Influence upon electrostatic charging
   - Induction of voltages in the case of moving motors
   - Operation and/or ambient conditions not compliant with the specification
   - Condensation/conductive contamination
   - External influences/damage.
4. Operational electrical, magnetic and electromagnetic fields that may pose a risk to people with a pacemaker, implants or metallic items if they are too close.
5. Release of pollutants and emissions if components are not operated or disposed of properly.

For additional information on the residual risks emanating from the components of the PDS, please refer to the relevant chapters of the technical user documentation.

DANGER



Electrical, magnetic and electromagnetic fields (EMF) that occur during operation can pose a danger to persons who are present in the direct vicinity of the product – especially persons with pacemakers, implants, or similar devices.

The relevant directives and standards must be observed by the machine/plant operators and persons present in the vicinity of the product. These are, for example, EMF Directive 2004/40/EEC and standards EN 12198-1 to -3 pertinent to the European Economic Area (EEA), as well as accident prevention code BGV 11 and the associated rule BGR 11 "Electromagnetic fields" of the German employer's liability accident insurance association pertinent to Germany.

These state that a hazard analysis must be drawn up for every workplace, from which measures for reducing dangers and their impact on persons are derived and applied, and exposure and danger zones are defined and observed.

The safety information in the Storage, Transport, Installation, Commissioning, Operation, Maintenance, Disassembly and Disposal sections must also be taken into account.

2 Product description

The **T**achometer and **SY**nchronizing Board (TSY) is used for various applications, depending on the function class of the particular SIMOVERT MASTERDRIVES:

- **SIMOVERT FC (CU1)**

  The TSY is used to sense the speed actual value using a pulse encoder and a digital tachometer interface (DTI).

  The DTI is not required if a pulse encoder with high-voltage transistor logic (HTL tachometer) is used without inverted pulse track, and if electrical isolation is not required.

- **SIMOVERT VC (CU2)**

  The TSY supplies and evaluates the target frequency signal for the synchronizing function.

  The synchronizing function permits the converter output voltage to be synchronized (phase) with a target frequency signal. This can be used, for example, to accelerate a drive up to the operating frequency using a dedicated starting converter (synchronizing converter) for subsequent transfer to the control of an operating converter.

  The TSY of the operating converter generates the target frequency signal, in synchronism with the basic fundamental of phase U, which is transferred to the TSY of the synchronizing converter using a screened cable. The TSY has one binary input and two binary outputs which are used to control the changeover on the synchronizing converter.

  If the synchronizing function is selected, the synchronizing converter changes its own output frequency slightly until the phase position of its voltage coincides with the target frequency signal in phase U. A status bit is set to indicate phase synchronism. The synchronizing error status bit is set additionally if an inadmissible phase deviation occurs subsequently.

  The CU2 synchronizing function (P163 = 2) can be used only in the V/f open-loop control mode for textile applications.

♦ **SIMOVERT MASTERDRIVES Vector Control (CUVC)**

The TSY evaluates the line frequency in conjunction with a VSB to synchronize a motor with the line voltage and transfer the motor load from mains supply to converter operation.

The "Synchronize with line" function synchronizes the converter output voltage with the line frequency. It can be used to accelerate a drive with dedicated starting converter up to line frequency and transfer it to mains supply operation. Alternatively, the function can be used to transfer a drive from mains to converter operation and thus to decelerate the drive down to zero speed in a controlled manner.

The line voltage is measured by the VSB (Voltage Sensing Board) and evaluated by the TSY. The binary inputs/outputs on the TSY can be used to control the changeover process.
If the line synchronization function is selected, the converter automatically accelerates to the calculated line frequency after synchronization has been enabled. A binector is set to indicate frequency synchronization. Another binector is set to indicate any subsequent inadmissible phase deviation.

The "Synchronize with line" function can be selected only in the "V/f open-loop control" and "Encoderless vector control" modes.

Parameter settings: P100 = 1, 2 or 3
P534 = 2.

The TSY also evaluates the target frequency signal for the "Synchronize with operating converter" function (see SIMOVERT VC CU2).

The synchronization function can be used only in V/f textile control mode.

Parameter settings: P100 = 2
P534 = 1.

The TSY is inserted in the electronics box at slot 2 (right) or 3 (center) and is connected with the control unit (CU) via the local bus adapter (LBA, option).

3 Mounting, connecting-up

CAUTION



Boards contain components which could be damaged by electrostatic discharge. The human body must be discharged immediately before an electronics board is touched.
This can be simply done by touching a conductive, grounded object immediately beforehand (e.g. bare metal cubicle components).

Before the TSY board is used, it is necessary to expand the bus by installing the LBA. The board is then inserted at slot 2 (right) or 3 (center, refer to the following table), and is connected via connector (-X111 to -X113) for the particular application.

Slots in the electronics box		Boards
Left	Slot 1 (CU)	CU
Center	Slot 3 (options)	CB1 / SCB1 / SCB2 / (TSY, not for TB) ADB / CBx / EBx / SLB
Right	Slot 2 (options)	CB1 / SCB1 / SCB2 / TSY / TB / ADB / CBx / EBx / SLB

NOTE

Only one of each option board type may inserted in the electronics box.

TB (technology boards, e.g. T300) must always be inserted at slot 2. When a TB board is used, a TSY board may not be inserted.

If only one option board is used it must always be inserted at slot 2.

Option board Order Nos. and their descriptions are found in Section 9 of the Instruction Manual of the MASTERDRIVES converter.

Table 1 Electronics box slots

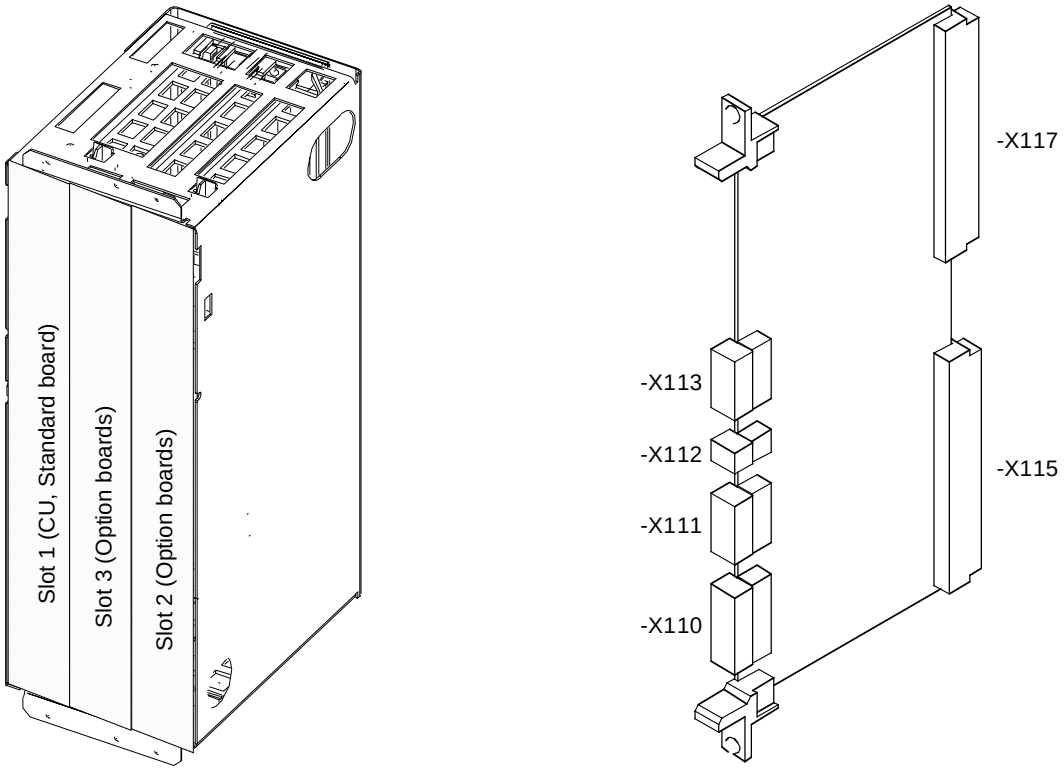

Fig. 1 Electronics box

NOTE

Screened cables must be used to prevent EMC disturbance.

Perfect operation of the board can only be guaranteed if

- the permissible cable lengths are adhered to (refer to Figs. 6, 7 and 8).
- power and control cables are routed separately.
- the board retaining screws above and below the handles are tightened!

Terminal assignment, -X110 to -X113

Terminal	Function, notes	
-X113:	**Digital tachometer**	
1	Reference potential	
2	Pulse, track A	
3	Pulse, track B	
4	Zero pulse	
5	Tachometer monitoring track	
6	15 V ± 15 % / 150 mA supply voltage	
-X112:	**Power supply output**	
7	+24 V	
8	Reference potential	
-X111:	**Synchronizing**	
9	Power supply input +24 V	
10	Reference potential	
11	Target frequency output P24 (current-limited to 10 mA)	
12	Target frequency output	
13	Target frequency input (not current-limited, min 8mA / max. 10 mA)	optocoupler, anode
14	Target frequency input	optocoupler, cathode
-X110:	**Binary inputs and outputs**	
15	Power supply output +24 V	
16	Binary output 1, NO 48 V / 0.6 A	
17	Binary output 1, NO 48 V / 0.6 A	
18	Binary output 2, NO 48 V / 0.6 A	
19	Binary output 2, NO 48 V / 0.6 A	
20	Binary input	
21	Reference potential, binary input	
22	Reference potential for -X110:15	

Table 1 Connecting terminals

Digital tachometer signal level

High level	Low level	I_{max} at 15 V	I_{max} at 30 V
8 V to 30 V	0 V to 3 V	3.5 mA	7 mA

NOTE

Conductor cross-sections from 0.14 mm^2 to 1.0 mm^2 (AWG*) = 28 to 18) can be used with the connection terminals of connectors - X110 to X113. If there are more than three control cables, each with up to four cores in the electronics box, sizes A to D, then the connection cross-sections must be reduced to 0.14 mm^2 to 0.2 mm^2 (AWG = 28 to 24).

When using the internal power supply, the following terminals must be jumpered (Fig. 2).

-X112:7→ -X111:9
-X112:8→ -X111:10

*) AWG = American Wire Gauge

4 Start-up

CAUTION



It is not permissible to work on the board with the power supply switched-on or when the motor is rotating.

Take care of the safety notes of the SIMOVERT MASTERDRIVES.

4.1 Start-up, digital tachometer (SIMOVERT FC)

Prerequisites

The standard converter start-up must have been successfully completed.

Start-up steps for SIMOVERT FC

- Switch-off the power supply.
- Check the existing board combination
  - TSY together with CU1
- Determine the tachometer type
- Determine the input terminals and check
  HTL ↔ -X113 TSY
  HTL ↔ -X402 DTI
  TTL*) ↔ -X401 DTI
- Establish the connection to the converter and check (refer to Figs. 6, 7 and 8)

  DTI -X403 ↔ **TSY** -X113,-X117 ↔ **CU1**-X107 (15 V signal level)
- Define the 24V power supply source for the tachometer (DTI)
  - 0.3 A power supply module (option)
  - Other 24V power supplies

NOTE

"Potential separation" is required for the external supply.

- Check that the cable screens are grounded at both ends and that the board is grounded.
- Switch-on the power supply with the front panels closed.
- Set the parameter numbers at the basic converter (description, refer to Section 5, Parameter list)

  P090 = 4, for subrack, slot 2 (right) / **P091 = 4,** for subrack, slot 3 (center)

  P208, S. (source) speed actual value **1** = pulse encoder without check track / **2** = pulse encoder with check track

  P209, pulse encoder pulse number

*) Tachometer with transistor-transistor logic

4.2 Start-up, synchronization (SIMOVERT VC)

Prerequisites

- The converter output terminals (U2/T1, V2/T2, W2/T3) of the operating- and synchronizing converters are connected up.
- The standard converter start-up has been completed.

Start-up steps

- Switch-off the power supply.
- Insert the TSY and screw it to the electronics box. The slot options are listed in Section 3.
- Make the connection between the TSY of the operating converter (-X111:11, 12) and the TSY of the synchronizing converter (-X111:13, 14); ensure that the screen is connected at both ends (refer to Figs. 4 and 5).
- Connect up the binary inputs and outputs on the TSY of the synchronizing converter as required. Both the status bits "synchronism reached" and "synchronizing error" can be output at the binary outputs for the purpose of changeover control (see wiring recommendations, Table 2 and Figs. 2 and 3). The synchronizing error message is set in addition to the synchronism signal if an inadmissible phase deviation occurs after synchronism had been reached. The two status bits are reset only when synchronization is cancelled or by an OFF command.
- Switch on the power supply with the front panels closed.
- Parameterize the hardware configuration for the operating- and synchronizing converter corresponding to the slot of the TSY. For slot 2 (right): **P90 = 4**; for slot 3 (center): **P91 = 4** (refer to the Instruction Manual of the SIMOVERT MASTERDRIVES (Section 4 "Start-up", Expert application and Section 5 "Parameter List").
- For the operating and synchronizing converters set the V/F open-loop control mode for textile applications (**P163 = 2**, refer to the Instruction Manual of the SIMOVERT MASTERDRIVES (Section 4 "Start-up", Expert application").
- Parameterize the binary inputs and outputs on the TSY board of the synchronizing converter corresponding to the wiring above (refer to Table 2 and the instruction Manual of the SIMOVERT MASTERDRIVES (Section 4 "Start-up", and Section 5 "Parameter List").
- Parameterize the same characteristics, direction of rotation and frequency setpoint for the operating and synchronizing converters (refer to the Instruction Manual of the SIMOVERT MASTERDRIVES (Section 4 "Start-up", V/f open-loop control for textile applications). The maximum synchronizing converter frequency should be selected to be approximately 1 Hz greater than that of the operating converter.

- Adapt synchronizing parameters P389 to P392 of the synchronizing converter as required.
  - **P389:** Maximum permissible frequency deviation prior to synchronization
  - **P390:** Reference phase shift for synchronization
  - **P391:** Phase deviation, when exceeded, sets the synchronizing error message
  - **P392:** Frequency control range of the synchronizing controller output
- Power-up the operating and synchronizing converters, and let them run-up to the reference frequency.
- In the run status (r001 = 14), start synchronization with the source parameterized in **P582**. Now it is no longer permissible to change the frequency reference values for the operating and synchronizing converters. Synchronization is aborted if alarm signals or messages are issued.
- The following monitoring parameters are available for the synchronizing converter:
  - **r388:** Synchronizing status
  - **r393:** Measured target frequency
  - **r394:** Measured phase shift between phase U of the synchronizing converter and the target frequency signal
- After synchronization, or until synchronization is aborted, synchronization can be cancelled using the source parameterized in **P582**.

We recommend that the binary inputs and outputs on the TSY are assigned as follows:

Terminal	Function	Parameter No. / Name	Parameter value	Description
-X110:16,17	Binary output 1	**P617** ST sync. reached	i003 = 5001 (pre-assigned)	Relay closes, when synchronism has been reached
-X110:18,19	Binary output 2	**P630** ST sync. error	i003 = 5002 (pre-assigned)	Relay opens when a synchronization error occurs
-X110:20,21	Binary input	**P582** S. sync. enable	i001 = 5001 (not pre-assigned)	Select synchronization (H) signal), cancel (low signal)

Table 2 Recommended wiring and parameterization for the binary inputs and outputs on the TSY board

NOTE

The 24 V power supply is only present, if the appropriate 24 V supply is connected at connector -X111:9, 10. If potential separation is required for synchronization, then an electrically isolated 24 V power supply must be provided externally (20 V to 30 V signal level) (refer to Figs. 3 and 5).

"Potential separation" is required for the external supply.

4.3 Start-up, synchronization (SIMOVERT MASTERDRIVES Vector Control)

Prerequisites

- The converter output terminals (U2/T1, V2/T2, W2/T3) of the operating converter and the synchronizing converter are connected up.
- The standard start-up procedure for the converter has been completed.

Start-up steps

- Disconnect the power supply.
- Insert the TSY and screw it to the electronics box. The slot options are listed in Section 3.
- Make the connection between the TSY of the operating converter (-X111:11, 12) and the TSY of the synchronizing converter (-X111:13, 14); ensure that the screen is connected at both ends (refer to Figs. 4 and 5).
- Connect up the binary inputs and outputs on the TSY of the synchronizing converter as required. Both the status bits "synchronism reached" and "synchronizing error" can be output at the binary outputs for the purpose of changeover control (see Table 3 and Figs. 2 and 3). The synchronizing error message is set in addition to the synchronism signal if an inadmissible phase deviation occurs after synchronism had been reached. The two status bits are reset only when synchronization is cancelled or by an OFF command.
- Close the front panels and switch on the power supply.
- Set the V/f control mode for textile applications **(P100 = 2)** on the operating and synchronizing converters
- Parameterize the binary inputs and outputs on the TSY of the synchronizing converter to match the connections above (see Table 3 or check parameterization).
- Parameterize identical characteristics, direction of rotation and frequency setpoints on the operating and synchronizing converters (see SIMOVERT MASTERDRIVES Instruction Manual, Section "Parameterizing steps"). The maximum frequency of the synchronizing converter must be set to about 1 Hz higher than that of the operating converter.
- Adjust synchronization parameters P529 to P532 on the synchronizing converter as required.
  - **P529:** Maximum permissible frequency deviation prior to synchronization
  - **P530:** Reference phase shift for synchronization
  - **P531:** Phase deviation limit for activation of synchronizing error message
  - **P532:** Frequency control range of the synchronizing controller output
- Switch on the operating and synchronizing converters and wait for them to accelerate to reference frequency.

- When the converters reach Run status (r001 = 14), start the synchronization process from the source parameterized in **P582**. You may not now alter the frequency setpoints of either converter. Alarm messages do not cause synchronization to be aborted.
- The following monitoring parameters are available on the synchronizing converter:

  r528: Synchronizing status (B297...B299)

  r533: Measured target frequency (K275)

  r394: Phase shift measured between phase U of the synchronizing converter and the target frequency signal (K276)
- You can deselect synchronization via the source parameterized in **P582** once the converter is synchronized or to abort the process.

We recommend the following assignments for the binary inputs and outputs on the TSY (the connections are made at the factory):

Terminal	Function	Parameter no. or binector	Factory connection	Description
-X110:16,17	Binary output 1	**B134, B135**	**P650.1 = 134**	Relay closes when converters are synchronized
-X110:18,19	Binary output 2	**B160, B161**	**P650.2 = 161**	Relay opens in response to synchronizing error
-X110:20,21	Binary input	**P582** Src Sync Release	**P582.1 = 5002**	Select (H level) or deselect (L level) synchronization

Table 3 Recommended wiring and parameterization for the binary inputs and outputs on the TSY board

NOTE

The 24 V power supply is available only if the appropriate 24 V supply is connected at -X111:9,10. If you require an isolated circuit for synchronization, you must provide an external isolated 24 V power supply (between 20 V and 30 V) (see Figs. 3 and 5).

"Protective separation" is required for the external supply.

4.4 Start-up, line synchronization (SIMOVERT MASTERDRIVES Vector Control)

Prerequisites

- The standard start-up procedure for the converter has been completed.

Start-up steps

- Disconnect the power supply.
- Insert the TSY and screw it to the electronics box. The slot options are listed in Section 3.
- Make the connection between the TSY and VSB as shown in Fig. 9 or 10.
  VSB -X4:1, 2 TSY –X111:13, 14
- Connect the VSB to the mains supply:
  –X1:1 = L1 -X1:4 = L2 -X1:7 = L3
- Connect a voltage supply to the TSY and VSB (see Fig. 9 or 10):
  Internal: Connect TSY-X111:9, 10 to –X112:7, 8
  External: TSY -X111:9 = +24 V
  -X112:9 = M
  Connect VSB -X3:3, 1 to TSY –X111:9, 10
- Connect up the binary inputs/outputs on the TSY and converter as required.
  The factory settings are given in Table 3.
- Close the front panel and switch on the power supply.
- Set the desired control mode (see Instruction Manual, Section "Parameterizing steps). The following settings are permitted:
  P060 = 5
  P100 = 1, 2 or 3
  P060 = 1
- Set the converter to line synchronization.
  P534 =2
- The factory-made signal connections are as follows:
  - Synchronizing enable via input TSY –X110:20 (P582 = 5002)
  - "Synchronism reached" signal at TSY output –X110:16, 17 (P650.02 = 161)
- Adjust synchronizing parameters as required:

  P529 SyncStartDelta f
  Maximum permissible frequency deviation prior to synchronization

  P530 Sync Angle Set
  Reference phase shift for synchronization

  P531 Sync.Window
  Phase deviation limit for activating synchronizing error message (B160 / B161) once synchronization is reached.

  P532 Sync.Delta fmax
  Frequency control range of synchronizing encoder
- Switch on the converter.

- In the "Run" state (°004)
  Enable synchronization via the source connected to P582 (factory setting TSY input –X110:20). The converter automatically accelerates up to the measured line frequency.
- The following monitoring parameters are available:

  r528: Sync Status
  Synchronization status

  r533: SyncTarget Freq
  Target frequency measured during synchronization
- The following binectors are available:

  B297: Synchronization selected
  B298: Frequency measurement active
  B299: Phase measurement active
  B134: Synchronism reached (connected at factory to TSY –X110:16, 17)
  B160: Synchronizing error
  B161: No synchronizing error (connected at factory to TSY –X110:18, 19)
- The motor can be switched onto the line supply after successful synchronization ("synchronism reached".
- You can deselect synchronization via the source parameterized in P582 once the converter is synchronized or to abort the process.

NOTE

Synchronization must be enabled after pulse enabling on a starting converter and prior to pulse enabling on a ramp-down converter.

5 Technical data

Board name	**T**achometer and **Sy**nchronizing board (TSY)		
Order No.	6SE7090-0XX84-0BA0		
Supply voltage	24 V DC +25 % / –15 %, 40 mA		without loads at the binary input/outputs
Supply voltage without DTI	15 V DC, 150 mA		
Supply voltage with DTI	15 V DC, 250 mA; 5 V DC, <150 mA		
Board operating temperature	0 °C to +55 °C		
Storage temperature	– 25 °C to +70 °C		
Transport temperature	– 25 °C to +70 °C		
Environmental class			
– climatic:	3K3	acc. to DIN IEC 721 Part 3-3 / 04.90	
– pollutant exposure:	3C2	acc. to DIN IEC 721 Part 3-3 / 04.90	
Degree of pollution	2	acc. to DIN VDE 0110 Part 1 / 01.89 moisture condensation not permissible	
Overvoltage category	II	acc. to DIN VDE 0110 Part 2 / 01.89	
Degree of protection	IP00	acc. to DIN VDE 0470 Part 1 / 11.92 ≙ EN 60529	
Mechanical ruggedness		acc. to DIN IEC 68-2-6 / 06.90	

	Frequency range	Constant amplitude of the	
		deflection	acceleration
	Hz	mm	m/s^2 (g)
– for stationary use	10 to 60	0.35	
	above 60 to 500		49 (5)
– for transport	5 to 9	3.5	
	above 9 to 500		9.8 (1)

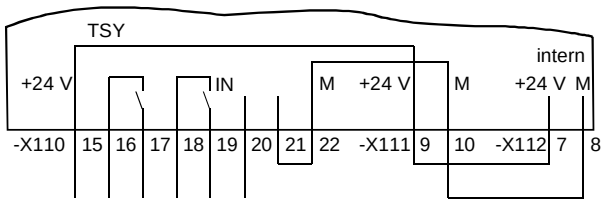

Fig. 2 Binary inputs and outputs with the internal power supply

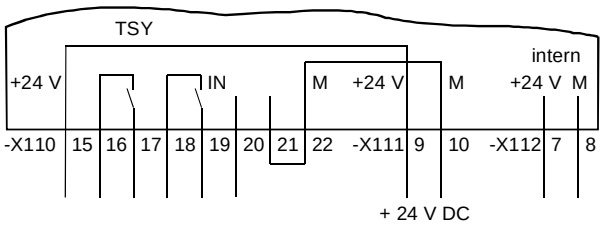

Fig. 3 Binary inputs and outputs with the external power supply

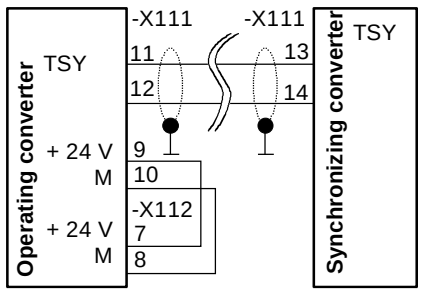

Fig. 4 Synchronizing with an internal power supply

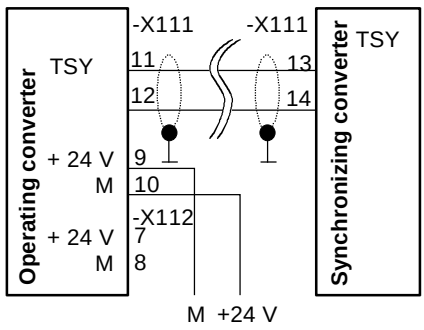

Fig. 5 Synchronizing with an electrically isolated power supply

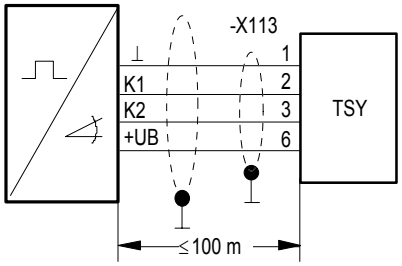

Fig. 6 HTL tachometer without inverted pulse track (type H0G9, Fa. Hübner Berlin), with electrical isolation

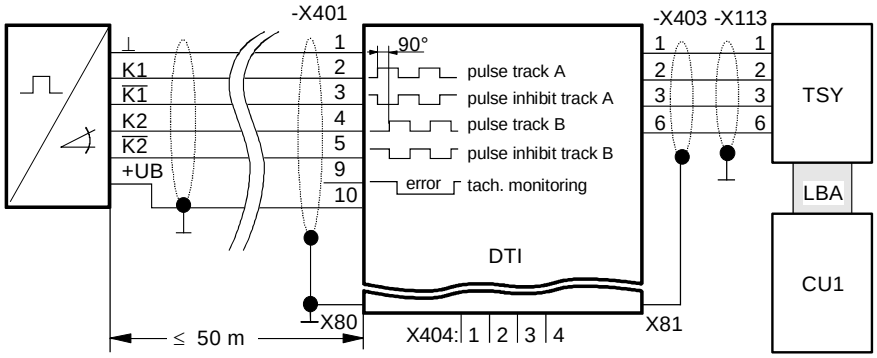

Fig. 7 TTL tachometer with inverted pulse track (type H0G9, Fa. Hübner Berlin)

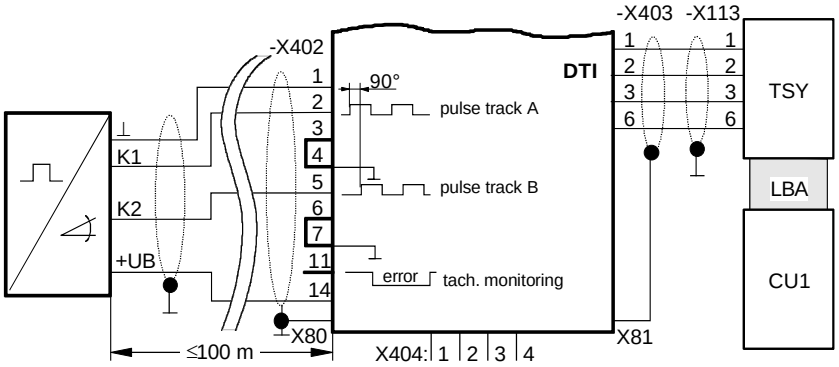

Fig. 8 HTL tachometer without inverted pulse track (type H0G9, Fa. Hübner Berlin), with electrical isolation

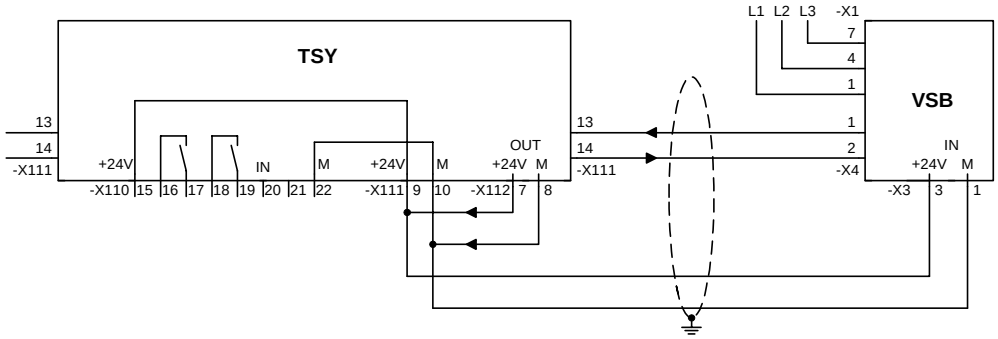

Fig. 9 Line synchronization with internal power supply

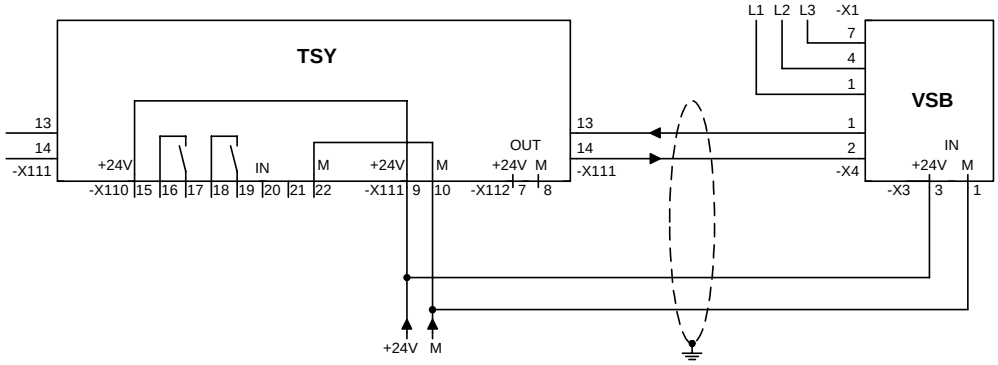

Fig. 10 Line synchronization with external power supply

Bisher sind folgende Ausgaben erschienen:
The following versions have been published so far:

Ausgabe Version	interne Sachnummer Internal item number
01.95	477 410 4000.76 Ja
AB	A5E00387740
AC	A5E00387740

Ausgabe AC besteht aus folgenden Kapiteln:
Version AC consists of the following chapters:

Kapitel		Chapter	Seitenzahl Pages	Ausgabedatum Version date
0	Definitionen	Definitions	5	01.2009
1	Produktbeschreibung	Product Description	2	10.1999
2	Montieren, Anschließen	Installation, Connecting-up	3	10.1999
3	Inbetriebsetzen	Start-up	7	10.1999
4	Technische Daten	Technical Data	3	10.1999

Änderungen von Funktionen, technischen Daten, Normen, Zeichnungen und Parametern vorbehalten.

We reserve the right to make changes to functions, technical data, standards, drawings and parameters.

Weitergabe sowie Vervielfältigung dieser Unterlage, Verwertung und Mitteilung ihres Inhalts nicht gestattet, soweit nicht ausdrücklich zugestanden. Zuwiderhandlungen verpflichten zu Schadenersatz. Alle Rechte vorbehalten, insbesondere für den Fall der Patenterteilung oder GM-Eintragung.

Wir haben den Inhalt der Druckschrift auf Übereinstimmung mit der beschriebenen Hard- und Software überprüft. Dennoch können Abweichungen nicht ausgeschlossen werden, so dass wir für die vollständige Übereinstimmung keine Garantie übernehmen. Die Angaben in dieser Druckschrift werden jedoch regelmäßig überprüft und notwendige Korrekturen sind in den nachfolgenden Auflagen enthalten. Für Verbesserungsvorschläge sind wir dankbar.

SIMOVERT® ist ein Warenzeichen von Siemens

The reproduction, transmission or use of this document or its contents is not permitted without express written authority. Offenders will be liable for damages. All rights, including rights created by patent grant or registration of a utility model or design, are reserved.

We have checked the contents of this document to ensure that they coincide with the described hardware and software. However, differences cannot be completely excluded, so that we do not accept any guarantee for complete conformance. However, the information in this document is regularly checked and necessary corrections will be included in subsequent editions. We are grateful for any recommendations for improvement.

SIMOVERT® Registered Trade Mark

Siemens AG
Industry Sector
Motion Control Systems
P.O. Box 3180, D – 91050 Erlangen
Germany

www.siemens.com/motioncontrol

© Siemens AG 2009
Subject to change without prior notice
Bestell-Nr./Order No.: 6SE7087-6CX84-0BA0

Printed in Germany

SIEMENS

SIMOVERT MASTERDRIVES

Betriebsanleitung
Operating Instructions

VSB – Voltage Sensing Board

Ausgabe / Edition: AD

Bestell-Nr. / Order No.: 6SE7087-6NX84-1GA0

Änderungen von Funktionen, technischen Daten, Normen, Zeichnungen und Parametern vorbehalten.

We reserve the right to make changes to functions, technical data, standards, drawings and parameters.

Weitergabe sowie Vervielfältigung dieser Unterlage, Verwertung und Mitteilung ihres Inhalts nicht gestattet, soweit nicht ausdrücklich zugestanden. Zuwiderhandlungen verpflichten zu Schadenersatz. Alle Rechte vorbehalten, insbesondere für den Fall der Patenterteilung oder GM-Eintragung.

Wir haben den Inhalt der Druckschrift auf Übereinstimmung mit der beschriebenen Hard- und Software überprüft. Dennoch können Abweichungen nicht ausgeschlossen werden, so daß wir für die vollständige Übereinstimmung keine Garantie übernehmen. Die Angaben in dieser Druckschrift werden jedoch regelmäßig überprüft und notwendige Korrekturen sind in den nachfolgenden Auflagen enthalten. Für Verbesserungsvorschläge sind wir dankbar

SIMOVERT® ist ein Warenzeichen von Siemens

The reproduction, transmission or use of this document or its contents is not permitted without express written authority. Offenders will be liable for damages. All rights, including rights created by patent grant or registration of a utility model or design, are reserved.

We have checked the contents of this document to ensure that they coincide with the described hardware and software. However, differences cannot be completely excluded, so that we do not accept any guarantee for complete conformance. However, the information in this document is regularly checked and necessary corrections will be included in subsequent editions. We are grateful for any recommendations for improvement.

SIMOVERT® Registered Trade Mark

© Siemens AG 1998 All rights reserved

Contents

0 Definitions and Warnings 0-1

1 Description 1-1

2 Technical Data 2-1

3 Installation 3-1

4 Connecting-up 4-1

4.1 Line synchronization of a motor with SIMOVERT MASTERDRIVES Vector Control 4-1

4.2 Self-commutated rectifier/regenerative unit (AFE) 4-4

5 Start-Up 5-1

0 Definitions and Warnings

Qualified personnel

For the purpose of this documentation and the product warning labels, a "Qualified person" is someone who is familiar with the installation, mounting, start-up, operation and maintenance of the product. He or she must have the following qualifications:

- Trained or authorized to energize, de-energize, ground and tag circuits and equipment in accordance with established safety procedures.
- Trained or authorized in the proper care and use of protective equipment in accordance with established safety procedures.
- Trained in rendering first aid.



DANGER indicates an **imminently** hazardous situation which, if not avoided, will result in death, serious injury and considerable damage to property.



WARNING indicates a **potentially** hazardous situation which, if not avoided, could result in death, serious injury and considerable damage to property.



CAUTION used with the safety alert symbol indicates a potentially hazardous situation which, if not avoided, may result in minor or moderate injury.

CAUTION used without safety alert symbol indicates a potentially hazardous situation which, if not avoided, may result in property damage.

NOTICE NOTICE used without the safety alert symbol indicates a potential situation which, if not avoided, may result in an undesirable result or state.

NOTE For the purpose of this documentation, "Note" indicates important information about the product or about the respective part of the documentation which is essential to highlight.



WARNING

- Hazardous voltages are present in this electrical equipment during operation.
- Non-observance of the warnings can thus result in severe personal injury or property damage.
- Only qualified personnel should work on or around the equipment
- This personnel must be thoroughly familiar with all warning and maintenance procedures contained in this documentation.
- The successful and safe operation of this equipment is dependent on correct transport, proper storage and installation as well as careful operation and maintenance.

NOTE

This documentation does not purport to cover all details on all types of the product, nor to provide for every possible contingency to be met in connection with installation, operation or maintenance.

Should further information be desired or should particular problems arise which are not covered sufficiently for the purchaser's purposes, the matter should be referred to the local SIEMENS sales office.

The contents of this documentation shall not become part of or modify any prior or existing agreement, commitment or relationship. The sales contract contains the entire obligation of SIEMENS AG. The warranty contained in the contract between the parties is the sole warranty of SIEMENS AG. Any statements contained herein do not create new warranties or modify the existing warranty.

Proper use of Siemens products

WARNING



Siemens products may only be used for the applications described in the catalog and in the relevant technical documentation. If products and components from other manufacturers are used, these must be recommended or approved by Siemens. Proper transport, storage, installation, assembly, commissioning, operation and maintenance are required to ensure that the products operate safely and without any problems. The permissible ambient conditions must be adhered to. The information in the relevant documentation must be observed.



CAUTION

Components which can be destroyed by electrostatic discharge (ESD)

The board contains components which can be destroyed by electrostatic discharge. These components can be easily destroyed if not carefully handled. If you have to handle electronic boards, please observe the following:

- Electronic boards should only be touched when absolutely necessary.
- The human body must be electrically discharged before touching an electronic board.
- Boards must not come into contact with highly insulating materials - e.g. plastic parts, insulated desktops, articles of clothing manufactured from man-made fibers.
- Boards must only be placed on conductive surfaces.
- Boards and components should only be stored and transported in conductive packaging (e.g. metalized plastic boxes or metal containers).
- If the packing material is not conductive, the boards must be wrapped with a conductive packaging material, e.g. conductive foam rubber or household aluminium foil.

The necessary ESD protective measures are clearly shown in the following diagram:

- a = Conductive floor surface
- b = ESD table
- c = ESD shoes
- d = ESD overall
- e = ESD chain
- f = Cubicle ground connection

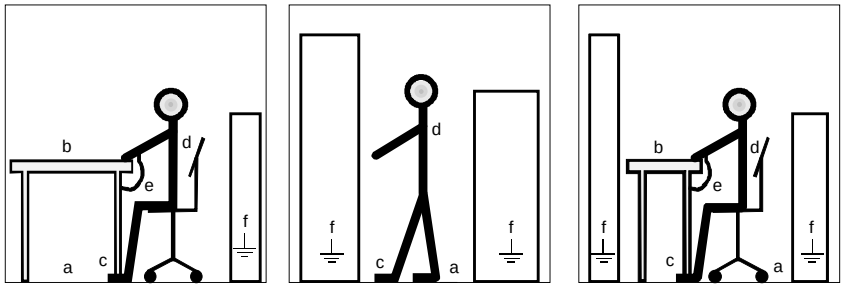

Fig. 0-1 ESD protective measures

Residual risks of Power Drive Systems (PDS)

DANGER



The components for the controller and drive of a Power Drive System (PDS) are authorized for industrial and commercial use in industrial networks. Their use in public networks requires a different planning and/or additional measures.

It is only permissible to operate these components in enclosed housings or in superordinate control cabinets and when all protective devices and protective covers are used.

These components may only be handled by qualified and trained specialist persons who are familiar with and observe all the safety instructions on the components and in the relevant technical user documentation.

The machine manufacturer must take into account the following residual risks resulting from the components for the controller and drive of a Power Drive System (PDS) when evaluating the risk of his machine in accordance with the EC machinery guideline.

1. Undesired movements of driven machine components during commissioning, operation, maintenance and repair, e.g. as a result of
   - HW and/or SW errors in the sensors, controller, actuators and connection system
   - Reaction times of the controller and the drive
   - Operation and/or ambient conditions not compliant with the specification
   - Errors in parameterization, programming, wiring and installation
   - Use of radio units/mobile phones in the direct vicinity of the controller
   - External influences/damage.

2. Extraordinary temperatures and emissions of light, noises, particles and gases, e.g. as a result of
   - Component failure
   - Software errors
   - Operation and/or ambient conditions not compliant with the specification
   - External influences/damage.
3. Dangerous contact voltages, e.g. as a result of
   - Component failure
   - Influence upon electrostatic charging
   - Induction of voltages in the case of moving motors
   - Operation and/or ambient conditions not compliant with the specification
   - Condensation/conductive contamination
   - External influences/damage.
4. Operational electrical, magnetic and electromagnetic fields that may pose a risk to people with a pacemaker, implants or metallic items if they are too close.
5. Release of pollutants and emissions if components are not operated or disposed of properly.

For additional information on the residual risks emanating from the components of the PDS, please refer to the relevant chapters of the technical user documentation.

DANGER



Electrical, magnetic and electromagnetic fields (EMF) that occur during operation can pose a danger to persons who are present in the direct vicinity of the product – especially persons with pacemakers, implants, or similar devices.

The relevant directives and standards must be observed by the machine/plant operators and persons present in the vicinity of the product. These are, for example, EMF Directive 2004/40/EEC and standards EN 12198-1 to -3 pertinent to the European Economic Area (EEA), as well as accident prevention code BGV 11 and the associated rule BGR 11 "Electromagnetic fields" of the German employer's liability accident insurance association pertinent to Germany.

These state that a hazard analysis must be drawn up for every workplace, from which measures for reducing dangers and their impact on persons are derived and applied, and exposure and danger zones are defined and observed.

The safety information in the Storage, Transport, Installation, Commissioning, Operation, Maintenance, Disassembly and Disposal sections must also be taken into account.

1 Description

Application

The voltage sensing board (VSB) is used to detect the supply voltage and convert it into signals which, in conjunction with a synchronizing board (TSY), synchronize the converter output voltage and the supply voltage. The motor load can be switched from the converter to the power supply and vice versa, with overlapping between the two.

For this purpose, the converter is to be used with contactors and reactors in accordance with the planning documents.

The board forms the phase signal, R, from the 3-phase supply voltage.

The VSB board is also used for detecting the supply voltage in the case of a self-commutated rectifier/regenerative unit, also called an active front end (AFE).

An additional relay is fitted to the board for operating a main contact.

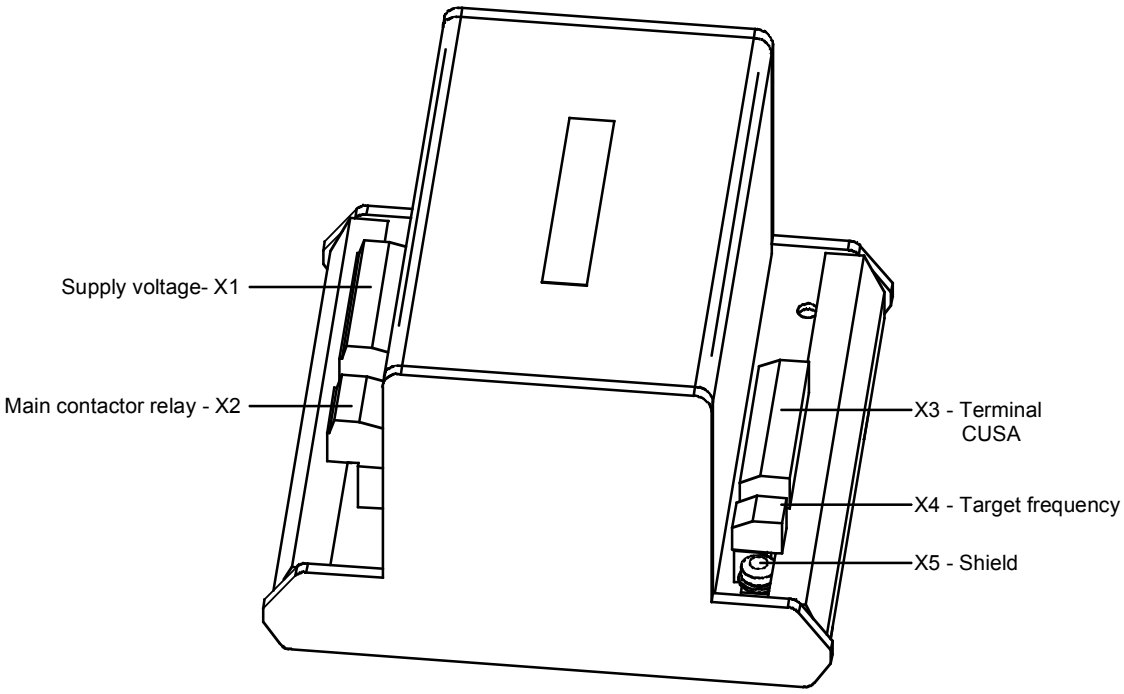

Fig. 1-1 View of the VSB optional board

2 Technical Data

Order No.	6SX7010-0EJ00
Size (length x width)	123 mm x 130 mm
Pollution degree	Pollution degree 2 to IEC 664-1 (DIN VDE 0110/T1), Moisture condensation during operation is not permissible
Mechanical specifications For stationary applications - deflection - acceleration During transport - deflection - acceleration	To DIN IEC 68-2-6 (if board correctly mounted) 0.15 mm in the frequency range 10 Hz to 58 Hz 19.6 m/s² in the frequency range > 58 Hz to 500 Hz 3.5 mm in the frequency range 5 Hz to 9 Hz 9.8 m/s² in the frequency range > 9 Hz to 500 Hz
Environmental class	Class 3K3 to DIN IEC 721-3-3 (during operation)
Cooling type	Natural-air cooling
Permissible ambient and cooling-medium temperature – during operation – during storage – during transport	 0° C to +70° C (32° F to 158° F) -25° C to +70° C (-13° F to 158° F) -25° C to +70° C (-13° F to 158° F)

Humidity rating	Relative humidity ≤ 95 % during transport and storage ≤ 85 % during operation (moisture condensation not permissible)
Voltage supply	20 V to 30 V / 100 mA
Supply voltage	380 V to 690 V ~
Relay output	230 V AC / 1 kVA

Table 2-1 General technical data

3 Installation

The board can be mounted on a DIN rail.

4 Connecting-up

4.1 Line synchronization of a motor with SIMOVERT MASTERDRIVES Vector Control

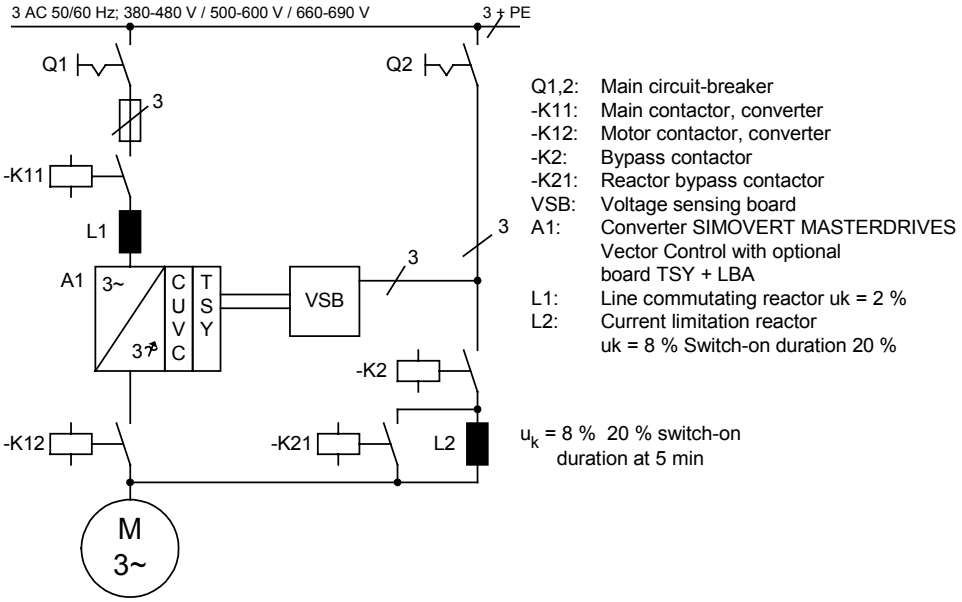

Fig. 4-1 Application: line synchronization

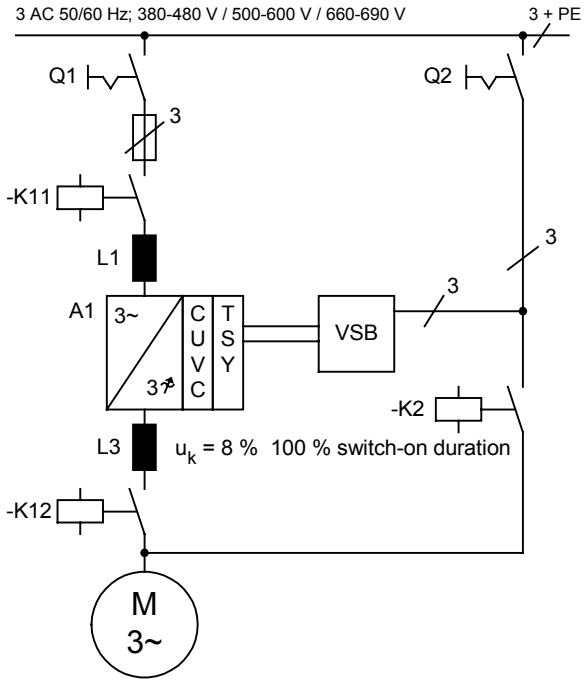

Q1,2: Main circuit-breaker
-K11: Main contactor, converter
-K12: Motor contactor, converter
-K2: Bypass contactor
VSB: Voltage sensing board
A1: Converter
SIMOVERT MASTERDRIVES
Vector Control with optional board TSY + LBA
L1: Line commutating reactor uk = 2 %
L3: Output reactor uk = 8 %

Fig. 4-2 Application: line synchronization

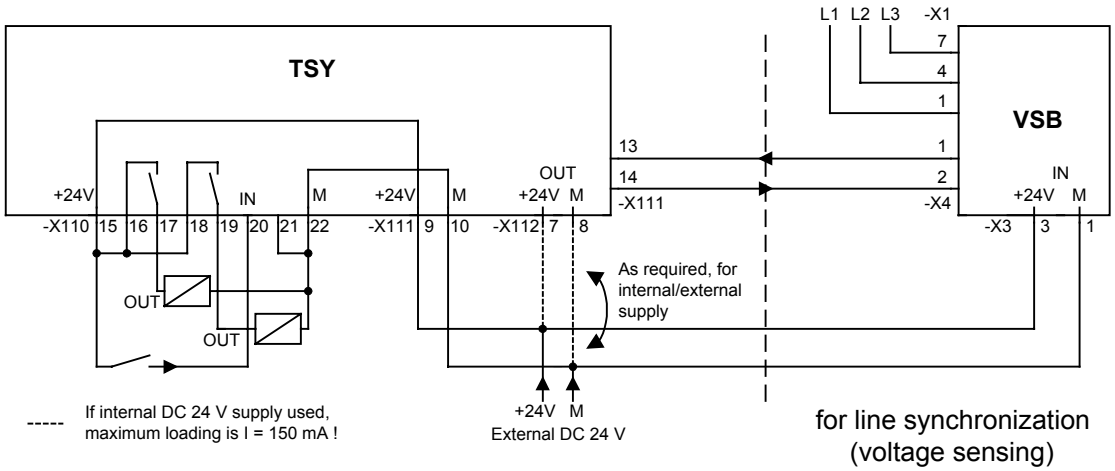

Fig. 4-3 Connections in the case of line synchronization

4.2 Self-commutated rectifier/regenerative unit (AFE)

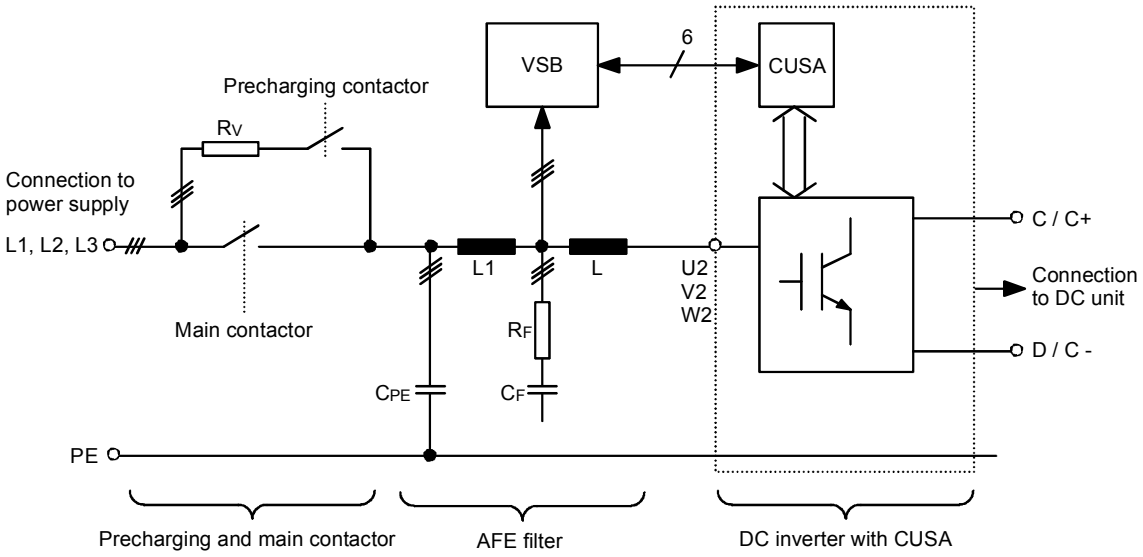

CUSA	AFE control board	RF	AFE filter, damping resistor
VSB	Voltage sensing board	CF	AFE filter, capacitor
RV	Precharging resistor	CPE	AFE filter, interference-suppression capacitor
L1, L	AFE filter, inductances		

Fig. 4-4 General circuit diagram

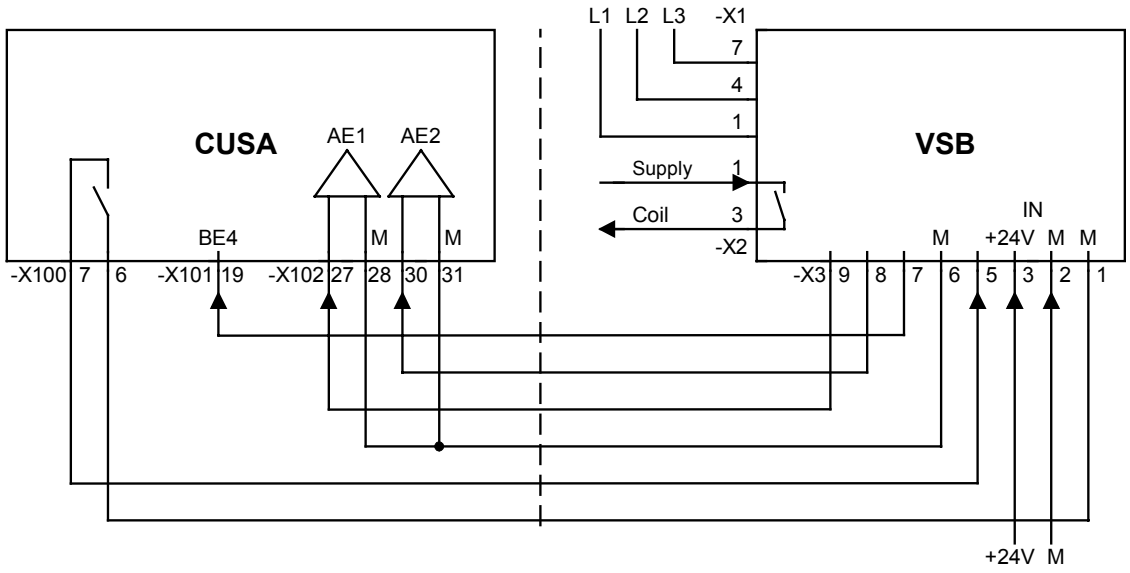

Fig. 4-5 Connections when AFE used

Terminal	Function, comments
-X1	**Supply voltage** Connection cross-section 0.2 – 2.5 mm^2 (AWG 24 - 12) single-wire or stranded
1	Phase L1
2	Not assigned
3	Not assigned
4	Phase L2
5	Not assigned
6	Not assigned
7	Phase L3
-X2	**Main contactor relay** Connection cross-section 0.2 – 2.5 mm^2 (AWG 24 - 12) single-wire or stranded
1	Make contact
2	Not assigned
3	Common-connection contact, switching capacity AC 230 V 1 kVA
-X3	**Connection of CUSA** Connection cross-section 0.14 – 1.5 mm^2 (AWG 28 - 16) single-wire or stranded
1	Ground 24 V supply
2	Ground 24 V supply
3	24 V voltage supply
4	Output + 15 V / 100 mA $\pm$ 5 % only in the case of external 24 V supply of the VSB board, not from the MASTERDRIVES converter

Terminal	Function, comments
5	Operation of main contactor relay, binary input, 20 mA, switches at low (0 V); operation with relay/open-collector output, blocking ability at least 24 V. A high level must not be connected.
6	Absolute dimensions for sensing of VSA, VSB
7	Monitoring of 24 V supply High (18 V to 30 V): Supply OK Low: Output resistance 22 kΩ to ground
8	Supply voltage VSB
9	Supply voltage VSA
10	Output – 15 V / 100 mA ± 5 % only in the case of external 24 V supply of the VSB board, not from the MASTERDRIVES converter
-X4	Connection cross-section, 0.14 – 1.5 mm^2 (AWG 28 - 16) single-wire or stranded
1	Target frequency output 0 V to + 15 V, current-limited 10 mA
2	Target frequency output, ground
-X5	**Earthing point / shield earth**
	Can be connected with cable lug for M4 screw

5 Start-Up

NOTE Further information for parameterizing the line-synchronization function can be found in the VC Compendium, especially the function diagrams for the TSY board.

Bisher sind folgende Ausgaben erschienen:
The following editions have been published so far:

Ausgabe Edition	Interne Sachnummer Internal Item Number
AA	475 460 4070 76 J AA-74
AB	475 460 4070 76 J AB-74 A5E00387628
AC	A5E00387628
AD	A5E00387628

Ausgabe AD besteht aus folgenden Kapiteln:
Version AD consists of the following chapters:

	Kapitel	Chapter	Seitenzahl Pages	Ausgabedatum Version date
0	Definitionen und Warnungen	Definitions and Warnings	9	08.2008
1	Beschreibung	Description	2	02.2003
2	Technische Daten	Technical Data	2	02.2003
3	Montage	Installation	1	10.98
4	Anschließen	Connecting-up	7	02.2003
5	Inbetriebsetzung	Start-up	1	10.98

Industry Sector
Motion Control Systems
Postfach 3180, D-91050 Erlangen

Siemens Aktiengesellschaft

Subject to change

Order No.: 6SE7087-6NX84-1GA0
Printed in the Federal Republic of Germany
08.2008