

Application

This valve is typically used in Large Air Handling Units on heating or cooling coils. This valve is suitable for use in a hydronic system with variable flow.

Valves are designed for ANSI 250 piping systems.
These valves are to be used in Diverting applications only.

	Valve Nominal Size	Type	Suitable Actuators			
C_v	Inches	3-way Flanged	Non-Spring		Spring	Electronic Fail-Safe
68	2½	G765DS-250	NVG	GM Series	AF(X) Series	GK Series
85	3	G780DS-250				
154	4	G7100DS-250				
195	5	G7125DS-250				
248	6	G7150DS-250				

Technical Data

	G7...DS-250	
Service	chilled or hot water, 60% glycol	
Flow characteristic	linear	
Action	stem up - open AB to B	
Sizes	2½" to 6"	
End fitting	250 lb. flanged	
Materials		
Body	iron	
Seat	stainless steel	
Stem	stainless steel	
Plug	stainless steel	
Packing	TFE V-ring	
ANSI class	ANSI 250	
Leakage	ANSI Class III	
Max inlet		
Water	250 psi (1724kPa) @ 350°F	
Media temperature		
Water	32°F to 350°F (0°C to 176°C)	
Maximum ΔP*		
Water	50 psi (340kPa)	
Rangeability	50:1	
Valve weights	G765DS-250	73 lbs
	G780DS-250	94 lbs
	G7100DS-250	166 lbs
	G7125DS-250	215 lbs
	G7150DS-250	284 lbs

*(50% or more open)

Dimensions

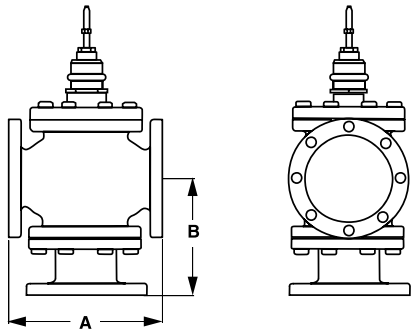

D169-G73W

	Valve Nominal Size		Dimensions (Inches [mm])	
Valve Body	Inches	DN [mm]	A	B
G765DS-250	2½"	[65]	9.63" [245]	7.38" [188]
G780DS-250	3"	[80]	10.75" [273]	8.38" [213]
G7100DS-250	4"	[100]	13.63" [346]	10.25" [260]
G7125DS-250	5"	[125]	12.88" [327]	11.00" [279]
G7150DS-250	6"	[150]	14.50" [368]	11.50" [292]

G7...DS-250 3-way Flow Patterns

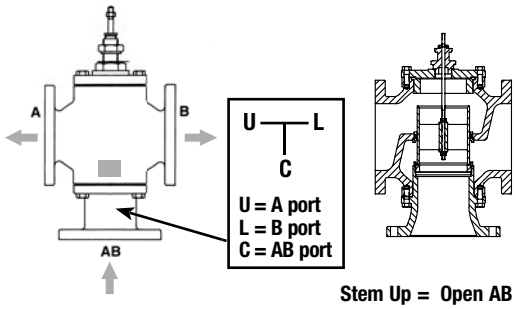

Flow Pattern is marked on valve.

Stem Up = Open AB to B
Open C to L

Piping

The valves should be mounted in a weather-protected area in a location that is within the ambient limits of the actuator. Allow sufficient room for valve with actuator and for service. For the NV Series, allow 6" for cover removal and 12" for complete actuator removal. The G6/G7 preferred mounting position of the valve is with the valve stem vertical above the valve body, for maximum life. However, the assemblies can be mounted with valve stem vertical above the valve or up to 45 degrees in relation to the horizontal pipe. The actuators should never be mounted underneath the valve, as condensation can build up and result in a failure of the actuators. Do not reverse flow direction.

N40021 - 06/11 - Subject to change. © Belimo Aircontrols (USA), Inc.



5 YEAR WARRANTY

CE LISTED 94 D5 TEMP.IND. & REG.EQUIP. c UL us

BRUSHLESS DC motor

Models

NVD24-MFT US
NV24-MFT US
NVG24-MFT US

Technical Data	
Power supply	24 VAC ± 20% 50/60 Hz, 24 VDC ± 10%
Nominal voltage range	19.2...28.8 VAC, 21.6...28.8 VDC
Power consumption	
NVD24-MFT US	3 W
NV24-MFT US	3 W
NVG24-MFT US	4 W
Transformer sizing	5 VA (Class 2 power source)
Electrical connection	3 ft, 18 GA plenum rated cable ½" conduit connector
Overload protection	electronic throughout stroke
Control	Multi-Function Technology
Control signal Y	2 to 10 VDC (V-10001 default), PWM available
Operating range	2 to 10 VDC 4 to 20 mA (w/500 Ω, ¼ W resistor) ZG-R01
Input impedance	100 kΩ for 2 to 10 VDC (0.1 mA) 500 Ω for 4 to 20 mA 1500 Ω for PWM, on/off and floating point
Feedback output U	2 to 10 VDC, 0.5 mA max
Maximum stroke	¾" [20mm]
Force	
NVD24-3 US	90 lbf [400 N]
NV24-3 US	225 lbf [1000 N]
NVG24-MFT US	360 lbf [1600 N]
Position indication	stroke indicator on bracket
Manual override	3/16" hex, 5mm hex or phillips screwdriver
Running time	150 seconds, independent of load
Humidity	5 to 95% RH non-condensing
Ambient temperature	32°F to 122°F [0°C to 50°C]
Storage temperature	20°F to 176°F [-7°C to 80°C]
Housing	NEMA 2/IP54 with cable entry down
Housing material	UL94-5V (flammability rating)
Agency listings†	cULus to UL 60730-1A/UL60730-2-14 and CAN/CSA E60730-1/CSA C22.2 No. 24-93 CE acc. to 2004/108/EC & 2006/95/EC, tested to 1EC/EN 60730-1 and 1EC/EN 60370-2-14
Noise level	<35 dB(A)
Quality standard	ISO 9001

Dimensions with G2... Series 2-Way Valve
Assembly using UNV-001 Bracket

D031

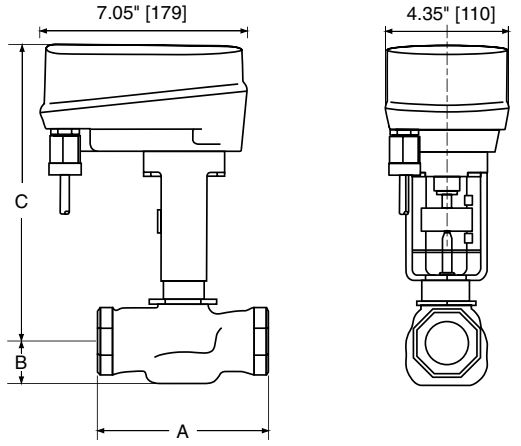

	Valve Nominal Size		Dimensions (Inches [mm])		
Valve Body	Inches	DN [mm]	A	B	C
G2	1/2"	15	3.00" [76]	1.06" [27]	9.75" [248]
G2	3/4"	20	3.62" [92]	1.06" [27]	9.75" [248]
G2	1"	25	4.62" [117]	1.12" [29]	10.43" [265]
G2	1-1/4"	32	4.62" [117]	1.37" [35]	10.43" [265]
G2	1-1/2"	40	5.37" [137]	1.50" [38]	10.50" [267]
G2	2"	50	6.12" [156]	1.56"[40]	10.81" [275]

Dimensions with G2...S Series 2-Way Valve
Assembly using UNV-035 Bracket (Bracket is 1.563" longer than UNV-001)

D056

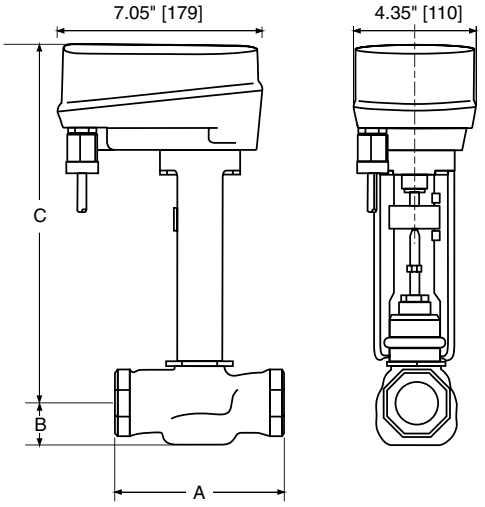

	Valve Nominal Size		Dimensions (Inches [mm])		
Valve Body	Inches	DN [mm]	A	B	C
G2S	1/2"	15	3.00" [76]	1.06" [27]	11.31" [287]
G2S	3/4"	20	3.62" [92]	1.06" [27]	11.31" [287]
G2S	1"	25	4.62" [117]	1.12" [29]	12.00" [305]
G2S	1-1/4"	32	4.62" [117]	1.37" [35]	12.00" [305]
G2S	1-1/2"	40	5.37" [137]	1.50" [38]	12.06" [306]
G2S	2"	50	6.12" [156]	1.56" [40]	12.37" [314]

N40021 - 06/11 - Subject to change. © Belimo Aircontrols (USA), Inc.

Dimensions with G3...(D) Series 3-Way Valve

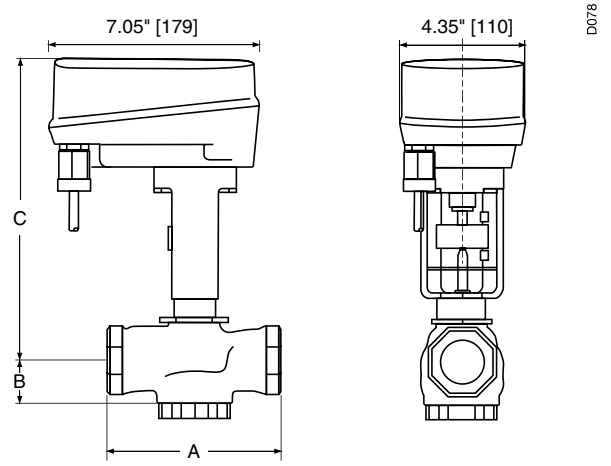

	Valve Nominal Size		Dimensions (Inches [mm])		
Valve Body	Inches	DN [mm]	A	B	C
G3(D)	1/2"	15	3.00" [76]	1.37" [35]	9.75" [248]
G3(D)	1/2"	15	3.00" [76]	1.37" [35]	9.75" [248]
G3(D)	3/4"	20	3.62" [92]	1.68" [43]	9.75" [248]
G3(D)	1"	25	4.62" [117]	1.56" [40]	9.81" [249]
G3(D)	1-1/4"	32	4.62" [117]	1.62" [41]	10.06" [256]
G3(D)	1-1/2"	40	5.37" [137]	1.62" [41]	9.18" [234]
G3(D)	2"	50	6.12" [156]	1.87" [48]	9.25" [235]

Dimensions with G6/G6C ANSI 125 and G6 ANSI 250 Series 2-Way Valve

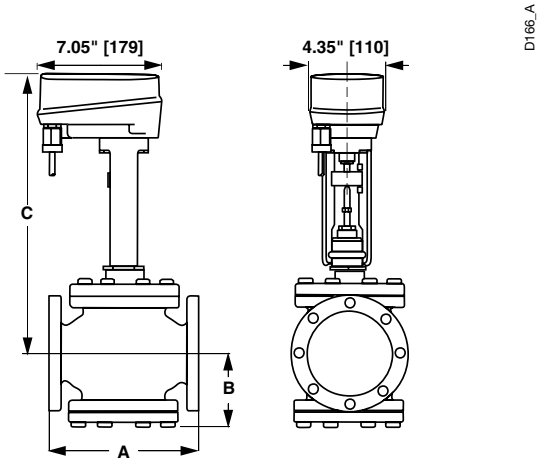

	Valve Nominal Size		Dimensions (Inches [mm])		
Valve Body	Inches	DN [mm]	A	B	C
G6/G6C ANSI 125	2-1/2"	65	9.00" [229]	4.75" [120]	15.00" [381]
G6/G6C ANSI 125	3"	80	10.00" [254]	5.37" [137]	15.43" [392]
G6 ANSI 250	2-1/2"	65	9.62" [244]	4.75" [120]	15.00" [381]
G6 ANSI 250	3"	80	10.75" [273]	5.37" [137]	15.43" [392]

Dimensions with G7 and G7D ANSI 125/250 Series 3-Way Valve

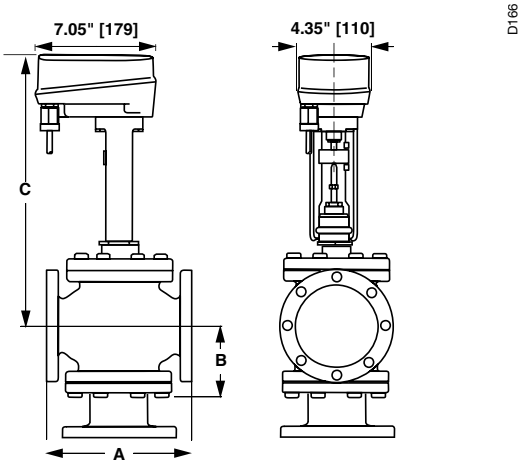

	Valve Nominal Size		Dimensions (Inches [mm])		
Valve Body	Inches	DN [mm]	A	B	C
G7 ANSI 125	2-1/2"	65	9.00" [229]	7.12" [181]	15.37" [391]
G7 ANSI 125	3"	80	10.00" [254]	8.00" [203]	15.93" [405]
G7D ANSI 125	2-1/2"	65	9.00" [229]	7.12" [181]	15.12" [384]
G7D ANSI 125	3"	80	10.00" [254]	8.00" [203]	15.93" [405]
G7D ANSI 125	4"	100	13.00" [330]	9.87" [251]	16.75" [425]
G7 ANSI 250	2-1/2"	65	9.62" [244]	7.37" [187]	15.50" [394]
G7 ANSI 250	3"	80	10.75" [273]	8.37" [213]	16.12" [410]
G7D ANSI 250	2-1/2"	65	9.62" [244]	7.37" [187]	15.25" [387]
G7D ANSI 250	3"	80	10.75" [273]	8.37" [213]	16.06" [408]
G7D ANSI 250	4"	100	13.62" [346]	10.25" [260]	16.87" [429]

Wiring Diagrams

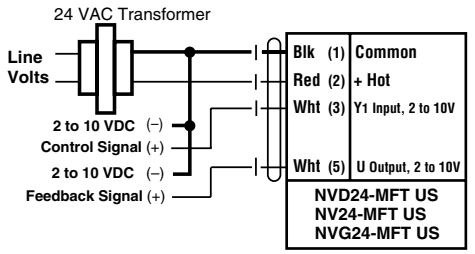

2 to 10 VDC Control Signal

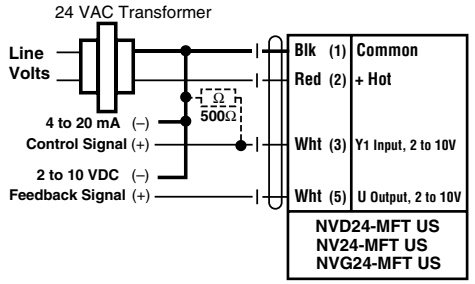

4 to 20 mA Control Signal

N40021 - 06/11 - Subject to change. © Belimo Aircontrols (USA), Inc.

G6/G7 Non-Spring Return, Spring Return and Electronic Fail Safe

	Non-Spring Return				Spring Return					Electronic Fail-Safe
	NV	NVG	GM	2 x GM	NVF	AF	2x AF	AFX	2 x AFX	GK
2-way ANSI 125										
G665, G665S		62	113	150		36	59	51	82	113
G680, G680S		42	78	121		24	40	34	56	78
G6100, G6100S			19							19
2-way Pressure Comp ANSI 125										
G665C, G665CS, G665LCS	150				150	150		150		
G680C, G680CS, G680LCS	150				136	150		150		
G6100C, G6100CS, G6100LCS			150				132		150	150
G6125C, G6125CS, G6125LCS			150				87		150	150
G6150C, G6150C, G6150LCS			150				50		150	150
2-way Pressure Comp ANSI 250										
G665C-250, G665CS-250								250		
G680C-250, G680CS-250								250		
G6100C-250, G6100CS-250			250						212	250
G6125C-250, G6125CS-250			239						152	239
G6150C-250, G6150C-250			178						105	178
2-way ANSI 250										
G665-250, G665S-250		62	113	176		36	59	51	82	113
G680-250, G680S-250		42	78	121		24	40	34	56	78
G6100-250, G6100S-250			19							19
3-way ANSI 125 Mixing										
G765, G765S		62	113	150		36	59	51	82	114
G780, G780S		42	78	121		24	40	34	56	78
G7100, G7100S			19	31					13	19
G7125, G7125S				19						
G7150, G7150S				13						
3-way ANSI 250 Mixing										
G765-250, G765S-250		62	113	176		35	58	40	114	114
G780-250, G780S-250		42	78	121		23	40	25	77	78
G7100-250, G7100S-250				31					24	19
G7125-250, G7125S-250				19						
G7150-250, G7150S-250				13						
3-way ANSI 125/250 Diverting										
G765D, G765DS, G765DS-250		100	100			100		100		100
G780D, G780DS, G780DS-250		100	100			100		100		100
G7100D, G7100DS, G100DS-250		100	100			100		100		100
G7125D, G7125DS, G7125DS-250			100				100		100	100
G7150D, G7150DS, G7150DS-250			100				100		100	100

N40021 - 06/11 - Subject to change. © Belimo Aircontrols (USA), Inc.