BELIMO

Technical data sheet G780DS

ANSI-Flanged Globe Valves

- chilled or hot water, up to 60% glycol
- ANSI Class 125, up to 175 psi below 150°F
- 125
- Cast iron - ASTM A126 Class B



Picture may differ from product

5-year warranty

Type overview

Type	DN	Cv	Body Pressure Rating
G780DS	3" [80]	85	ANSI Class 125, up to 175 psi below 150°F

Technical data

Functional data	Valve size [mm]	3" [80]
	Fluid	chilled or hot water, up to 60% glycol
	Fluid Temp Range (water)	32...350°F [0...176°C]
	Flow characteristic	linear
	Leakage rate	ANSI Class III
	Pipe connection	Flange for use with ASME/ANSI class 125
	Servicing	repack/rebuild kits available
	Rangeability Sv	50:1
	Flow Pattern	3-way Diverting
	Controllable flow range	stem up - open AB – B
Materials	Valve body	Cast iron - ASTM A126 Class B
	Closing element	Stainless steel
	Stem	316 stainless steel
	Stem seal	NLP EPDM (no lip packing)
	Seat	Stainless steel AISI 316
Suitable actuators	Non Fail-Safe	EVB(X)
	Spring	AF
	Electronic fail-safe	AVKB(X)

Safety notes

- This product can expose you to chemicals including lead, which is known to the State of California to cause cancer and reproductive harm. For more information go to www.p65warnings.ca.gov
- The valve has been designed for use in stationary heating, ventilation and air-conditioning systems and must not be used outside the specified field of application, especially in aircraft or in any other airborne means of transport.
- Only authorized specialists may carry out installation. All applicable legal or institutional installation regulations must be complied with during installation.
- The valve does not contain any parts that can be replaced or repaired by the user.
- When determining the flow rate characteristic of controlled devices, the recognised directives must be observed.

Accessories

Mechanical accessories	Description	Type
	Repack Kit for Belimo G6, G7 series globe valves, Stainless steel trim	ZG-GV04

Dimensions

Type	DN	Weight
G780DS	3" [80]	77.83 lb [35.38 kg]

EVB, EVX, RVB, RVX

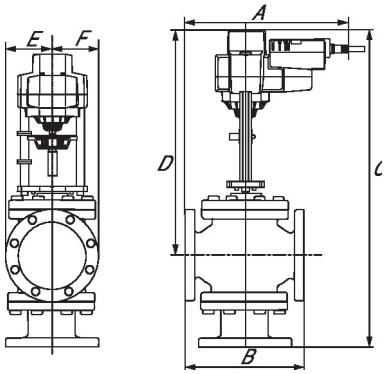

A	B	C	D	E	F	Number of Bolt Holes
12.2" [310]	10.0" [254]	27.3" [693]	19.0" [483]	3.9" [100]	3.9" [100]	4

AFB, AFX

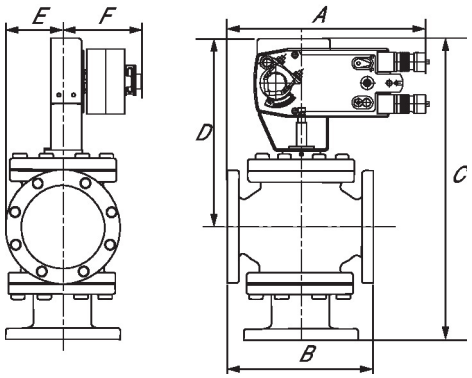

A	B	C	D	E	F	Number of Bolt Holes
12.2" [310]	10.0" [254]	25.6" [650]	17.8" [453]	3.9" [100]	5.3" [135]	4

AVKB, AVKX

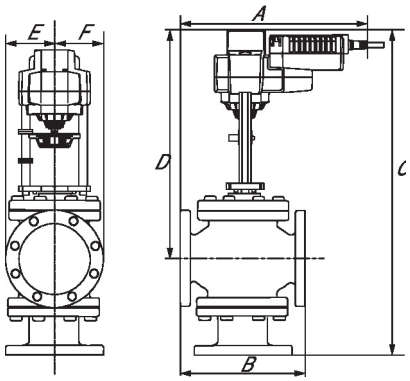

A	B	C	D	E	F	Number of Bolt Holes
12.2" [310]	10.0" [254]	27.3" [693]	19.0" [483]	3.9" [100]	3.9" [100]	4

BELIMO

Technical data sheet AVKB120-3

On/Off, Floating point, Electronic fail-safe, 100...240 V



Picture may differ from product

5-year warranty

Technical data

Electrical data	Nominal voltage	AC 100...240 V
	Nominal voltage frequency	50/60 Hz
	Nominal voltage range	AC 85...265 V
	Power consumption in operation	3.5 W
	Power consumption in rest position	2 W
	Transformer sizing	6.5 VA
	Overload Protection	electronic throughout full stroke
	Electrical Protection	actuators are double insulated
Functional data	Actuating force motor	2000 N [450 lbf]
	Position feedback U note	No Feedback
	Bridging time (PF)	2 s
	Pre-charging time	5...20 s
	Direction of motion motor	selectable with switch
	Direction of motion fail-safe	reversible with switch
	Manual override	5 mm hex crank (3/16" Allen), supplied
	Stroke	1.25" [32 mm]
	Running Time (Motor)	90 s /
	Running time motor note	constant, independent of load
	Running time fail-safe	<35 s
	Sound power level motor	60 dB(A)
	Sound power level, fail-safe	60 dB(A)
	Position indication	Mechanical, with pointer
Safety data	Power source UL	Class 2 Supply
	Degree of protection IEC/EN	IP54
	Degree of protection NEMA/UL	NEMA 2
	Housing	UL Enclosure Type 2
	Agency Listing	cULus acc. to UL60730-1A/-2-14, CAN/CSA E60730-1:02, CE acc. to 2014/30/EU and 2014/35/EU
	Quality Standard	ISO 9001
	Ambient humidity	Max. 95% RH, non-condensing
	Ambient temperature	-22...122°F [-30...50°C]
	Storage temperature	-40...176°F [-40...80°C]
	Servicing	maintenance-free
Weight	Weight	6.3 lb [2.9 kg]

Technical data

Materials	Housing material	Die cast aluminium and plastic casing

Footnotes † Use flexible metal conduit. Push the listed conduit fitting device over the actuator's cable to butt against the enclosure. Screw in conduit connector. Jacket the actuators input wiring with listed flexible conduit. Properly terminate the conduit in a suitable junction box. Rated impulse Voltage 800V. Type of action 1. Control pollution degree 3.

Electrical installation

Wire colors:
1 = blue
2 = brown
3 = white
4 = white

AC 230 V, 3-point

