ANSI-Flanged Globe Valves

- chilled or hot water, up to 60% glycol
- ANSI Class 250, up to 280 psi below 350°F
- 250
- Cast iron - ASTM A126 Class B



Picture may differ from product

5-year warranty

## Type overview

| Type | DN | Cv | Body Pressure Rating |
|---|---|---|---|
| G780S-250 | 3" [80] | 85 | ANSI Class 250, up to 280 psi below 350°F |

## Technical data

| | | |
|---|---|---|
| **Functional data** | Valve size [mm] | 3" [80] |
| | Fluid | chilled or hot water, up to 60% glycol |
| | Fluid Temp Range (water) | 32...350°F [0...176°C] |
| | Flow characteristic | linear |
| | Leakage rate | ANSI Class III |
| | Pipe connection | Flange<br>for use with ASME/ANSI class 250 |
| | Servicing | repack/rebuild kits available |
| | Rangeability Sv | 50:1 |
| | Flow Pattern | 3-way Mixing |
| | Controllable flow range | stem up - open B – AB |
| **Materials** | Valve body | Cast iron - ASTM A126 Class B |
| | Closing element | Stainless steel |
| | Stem | 316 stainless steel |
| | Stem seal | NLP EPDM (no lip packing) |
| | Seat | Stainless steel AISI 316 |
| **Suitable actuators** | Non Fail-Safe | EVB(X)<br>RVB(X) |
| | Spring | AF<br>2*AFB(X) |
| | Electronic fail-safe | AVKB(X)<br>2*GKB(X) |

## Safety notes

- WARNING: This product can expose you to chemicals including lead, which is known to the State of California to cause cancer and reproductive harm. For more information go to www.p65warnings.ca.gov
- The valve has been designed for use in stationary heating, ventilation and air-conditioning systems and must not be used outside the specified field of application, especially in aircraft or in any other airborne means of transport.
- Only authorized specialists may carry out installation. All applicable legal or institutional installation regulations must be complied with during installation.
- The valve does not contain any parts that can be replaced or repaired by the user.
- When determining the flow rate characteristic of controlled devices, the recognised directives must be observed.

## Accessories

| Mechanical accessories | Description | Type |
|---|---|---|
| | Repack Kit for Belimo G6, G7 series globe valves, Stainless steel trim | ZG-GV04 |

## Dimensions

| Type | DN | Weight |
|---|---|---|
| G780S-250 | 3" [80] | 91.80 lb [41.73 kg] |

EVB, EVX, RVB, RVX

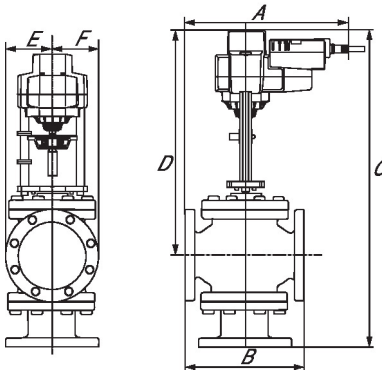


| A | B | C | D | E | F | Number of Bolt Holes |
|---|---|---|---|---|---|---|
| 12.6" [320] | 10.7" [273] | 27.3" [693] | 19.0" [483] | 4.1" [105] | 4.1" [105] | 8 |

2*GMB, 2*GMX, 2*GKB, 2*GKX

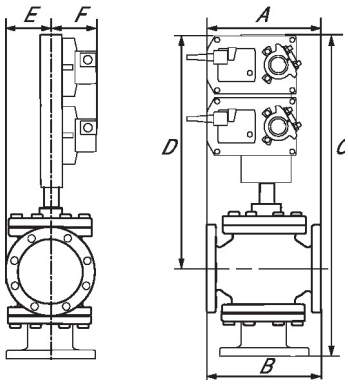


| A | B | C | D | E | F | Number of Bolt Holes |
|---|---|---|---|---|---|---|
| 12.7" [323] | 10.7" [273] | 30.5" [775] | 22.5" [572] | 4.1" [105] | 5.3" [135] | 8 |

AVKB, AVKX

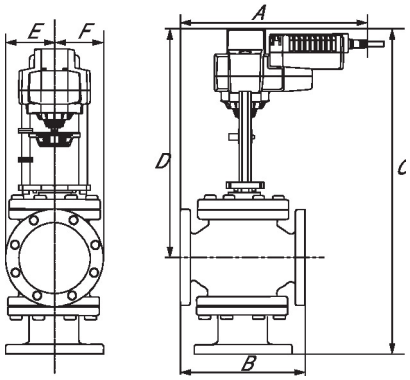


| A | B | C | D | E | F | Number of Bolt Holes |
|---|---|---|---|---|---|---|
| 12.6" [320] | 10.7" [273] | 27.3" [693] | 19.0" [483] | 4.1" [105] | 4.1" [105] | 8 |

## Dimensions

AFB, AFX

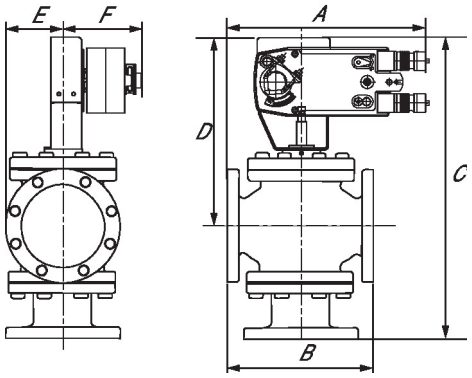


| A | B | C | D | E | F | Number of Bolt Holes |
|---|---|---|---|---|---|---|
| 12.7" [323] | 10.7" [273] | 25.6" [650] | 17.5" [445] | 4.1" [105] | 5.3" [135] | 8 |

2*AFB, 2*AFX

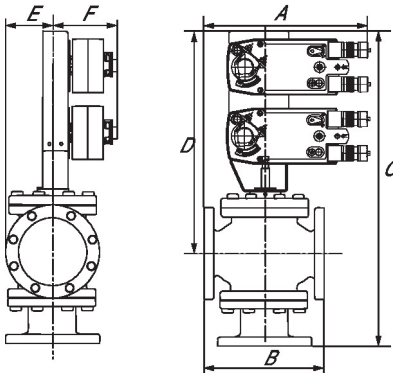


| A | B | C | D | E | F | Number of Bolt Holes |
|---|---|---|---|---|---|---|
| 12.7" [323] | 10.7" [273] | 30.5" [775] | 22.5" [572] | 4.1" [105] | 5.3" [135] | 8 |

# Technical data sheet AVKB120-3

On/Off, Floating point, Electronic fail-safe, 100...240 V



Picture may differ from product

5-year warranty

## Technical data

| | | |
|---|---|---|
| **Electrical data** | Nominal voltage | AC 100...240 V |
| | Nominal voltage frequency | 50/60 Hz |
| | Nominal voltage range | AC 85...265 V |
| | Power consumption in operation | 3.5 W |
| | Power consumption in rest position | 2 W |
| | Transformer sizing | 6.5 VA |
| | Electrical Connection | 18 AWG appliance cable, 1 m, with 1/2" NPT conduit connector, degree of protection NEMA 2 / IP54 |
| | Overload Protection | electronic throughout full stroke |
| | Electrical Protection | actuators are double insulated |
| **Functional data** | Actuating force motor | 2000 N [450 lbf] |
| | Position feedback U note | No Feedback |
| | Bridging time (PF) | 2 s |
| | Pre-charging time | 5...20 s |
| | Direction of motion motor | selectable with switch |
| | Direction of motion fail-safe | reversible with switch |
| | Manual override | 5 mm hex crank (3/16" Allen), supplied |
| | Stroke | 1.25" [32 mm] |
| | Running Time (Motor) | 90 s / |
| | Running time motor note | constant, independent of load |
| | Running time fail-safe | <35 s |
| | Sound power level, motor | 60 dB(A) |
| | Sound power level, fail-safe | 60 dB(A) |
| | Position indication | Mechanical, with pointer |
| **Safety data** | Power source UL | Class 2 Supply |
| | Degree of protection IEC/EN | IP54 |
| | Degree of protection NEMA/UL | NEMA 2 |
| | Housing | UL Enclosure Type 2 |
| | Agency Listing | cULus acc. to UL60730-1A/-2-14, CAN/CSA E60730-1:02, CE acc. to 2014/30/EU and 2014/35/EU |
| | Quality Standard | ISO 9001 |
| | Ambient humidity | Max. 95% RH, non-condensing |
| | Ambient temperature | -22...122°F [-30...50°C] |
| | Storage temperature | -40...176°F [-40...80°C] |

## Technical data

| | | |
|---|---|---|
| **Safety data** | Servicing | maintenance-free |
| **Weight** | Weight | 6.3 lb [2.9 kg] |
| **Materials** | Housing material | Die cast aluminium and plastic casing |

**Footnotes** † Use flexible metal conduit. Push the listed conduit fitting device over the actuator's cable to butt against the enclosure. Screw in conduit connector. Jacket the actuators input wiring with listed flexible conduit. Properly terminate the conduit in a suitable junction box. Rated impulse Voltage 800V. Type of action 1. Control pollution degree 3.

## Electrical installation

**Wire colors:**
1 = blue
2 = brown
3 = white
4 = white

AC 230 V, 3-point

