AF24 (-S) US

On-off, spring return failsafe, 24 V



Torque min. 133 in-lb, for control of air dampers

Technical Data	AF24 (-S) US
Power supply	24 VAC ± 20% 50/60 Hz 24 VDC ± 10%
Power consumption	running: 5 W; holding: 1.5 W
Transformer sizing	10 VA (class 2 power source)
Electrical connection	3 ft, 18 GA appliance cable 1/2" conduit connector
Electrical protection	auxiliary switches are double insulated
Overload protection	electronic throughout 0° to 95° rotation
Angle of rotation	95°, adjustable 35 to 95° w/ ZDB-AF2
Torque	133 in-lb [15 Nm] constant
Direction of rotation	reversible with CW/CCW mounting
Position indication	visual indicator, 0° to 95° (0° is spring return position)
Manual override	3mm hex crank (shipped w/actuator)
Auxiliary switches	2 x SPDT 7A (2.5A) @ 250 VAC, UL listed one set at +5°, one adjustable 25° to 85°
Running time	150 sec. constant, independent of load, spring return < 20 sec
Humidity	5 to 95% RH non-condensing
Ambient temperature	-22°F to +122°F [-30°C to +50°C]
Storage temperature	-40°F to +176°F [-40°C to +80°C]
Housing	NEMA type 2 / IP54
Housing material	zinc coated steel
Agency listings	UL 873 listed, CSA C22.2 No. 24 certified
Noise level	max. 45 dB (A)
Servicing	maintenance free
Quality standard	ISO 9001
Weight	6.0 lbs (2.7 kg.)

Application

For on-off, fail-safe control of dampers in HVAC systems. Actuator sizing should be done in accordance with the damper manufacturer's specifications. Control is on-off from an auxiliary contact, or a manual switch.

The actuator is mounted directly to a damper shaft up to 1.05" in diameter by means of its universal clamp. A crankarm and several mounting brackets are available for applications where the actuator cannot be direct coupled to the damper shaft.

Operation

The AF series actuators provide true spring return operation for reliable fail-safe application and positive close off on air tight dampers. The spring return system provides consistent torque to the damper with, and without, power applied to the actuator.

The AF series provide 95° of rotation and are provided with a graduated position indicator showing 0° to 95°. The AF has a unique manual positioning mechanism which allows the setting of any damper position within its 95° of rotation. The AF series actuators are shipped at +5° (5° from full fail-safe) to provide automatic compression against damper gaskets for tight shut-off. When power is applied to the AF series, the manual mechanism is released. The actuators will now try to close against the 0° position during its normal control operations. The manual override can also be released physically by the use of a crank supplied with the actuator.

The AF uses a brushless DC motor which is controlled by an Application Specific Integrated Circuit (ASIC). The ASIC monitors and controls the actuator's rotation and provides a digital rotation sensing function to prevent damage to the actuator in a stall condition. The actuator may be stalled anywhere in its normal rotation without the need of mechanical end switches.

The AF24-S US version is provided with 2 built in auxiliary switches. These SPDT switches are provided for safety interfacing or signaling, for example, for fan start-up. The switching function at the fail-safe position is fixed at +5°, the other switch function is adjustable between +25° to +85°.

Dimensions [All numbers in brackets are in millimeters.]

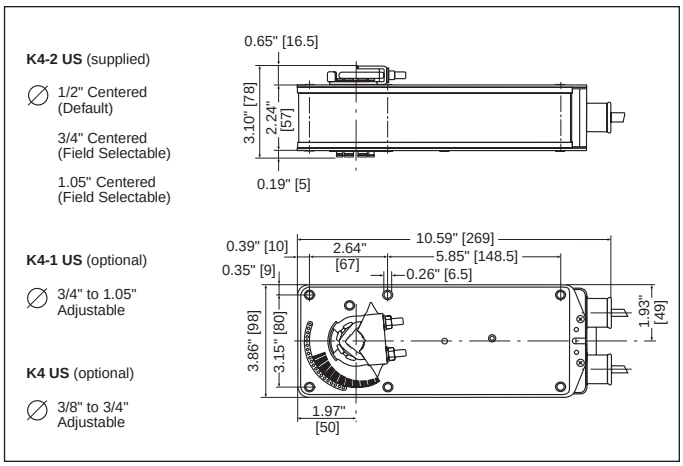

D001

G20492-IG-Subject to change. © Belimo Aircontrols (USA), Inc.

Accessories

AV 10-18	Shaft extension
IND-AF2	Damper position indicator
K4 US	Universal clamp for 3/8” to 3/4” shafts
K4-1 US	Universal clamp for up to 1.05” dia jackshafts
K4-H	Universal clamp for hexshafts 3/8” to 5/8”
KH-AF	Crankarm for up to 3/4” round shaft (Series 2)
KH-AF-1	Crankarm for up to 1.05” jackshaft (Series 2)
KH-AFV	V-bolt kit for KH-AF and KH-AF-1
Tool-06	8mm and 10 mm wrench
ZG-HTR	Thermostat/Heater Kit
ZDB-AF2	Angle of rotation limiter
ZG-100	Universal mounting bracket
ZG-101	Universal mounting bracket
ZG-102	Multiple actuator mounting bracket
ZG-103	Universal mounting bracket
ZG-104	Universal mounting bracket
ZG-106	Mounting bracket for Honeywell® Mod IV replacement or new crankarm type installations
ZG-107	Mounting bracket for Honeywell® Mod III or Johnson® Series 100 replacement or new crankarm type installations
ZG-108	Mounting bracket for Barber Colman® MA 3../4.., Honeywell® Mod III or IV or Johnson® Series 100 replacement or new crankarm type installations
ZG-AF US	Crankarm adaptor kit for AF/NF
ZG-AF108	Crankarm adaptor kit for AF/NF
ZS-100	Weather shield (metal)
ZS-150	Weather shield (polycarbonate)
ZS-260	Explosion-proof housing
ZS-300	NEMA 4X housing

Note: When using AF24 US and AF24-S US actuators, only use accessories listed on this page.

AF24 (-S) US Typical Specification

On-off spring return damper actuators shall be direct coupled type which require no crankarm and linkage and be capable of direct mounting to a jackshaft up to a 1.05” diameter. The actuators must be designed so that they may be used for either clockwise or counterclockwise fail-safe operation. Actuators shall have a manual positioning mechanism accessible on its cover. Actuators shall use a brushless DC motor and be protected from overload at all angles of rotation. Run time shall be constant and independent of torque. If required, 2 SPDT auxiliary switches shall be provided with one switch having the capability of being adjustable. Actuators with switches must be constructed to meet the requirement for Double Insulation so an electrical ground connection is not required to meet agency listings. Actuators shall be UL listed and CSA certified, have a 5 year warranty, and be manufactured under ISO 9001 International Quality Control Standards. Actuators shall be as manufactured by Belimo.

Wiring diagrams

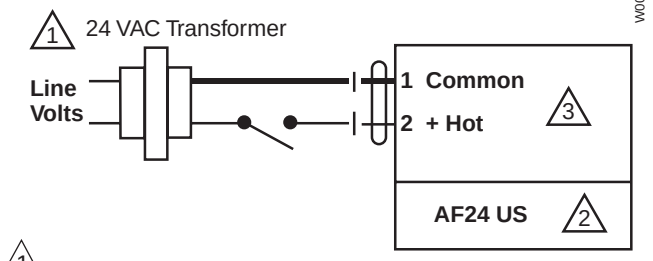

1 Provide overload protection and disconnect as required.

2 Actuators may be connected in parallel. Power consumption must be observed.

3 Actuator may also be powered by 24 VDC.

On-off wiring for AF24 US

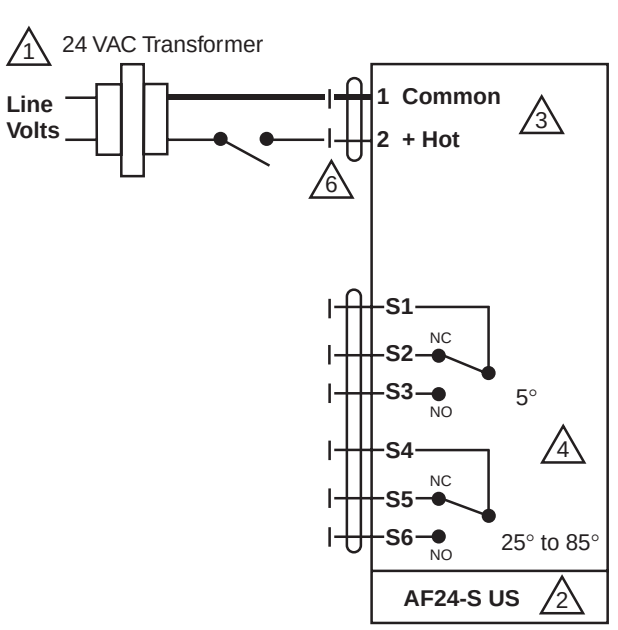

1 Provide overload protection and disconnect as required.

2 Actuators may be connected in parallel. Power consumption must be observed.

3 Actuator may also be powered by 24 VDC.

4 For end position indication, interlock control, fan start-up, etc., AF24-S US incorporates two built-in auxiliary switches: 2 x SPDT, 7A (2.5A) @250 VAC, UL listed, one switch is fixed at +5°, one is adjustable 25° to 85°.

6 Meets UL and CSA requirements without the need of an electrical ground connection.

On-off wiring for AF24-S US

G20492-Subject to change. © Belimo Aircontrols (USA), Inc.