G780S, 3-Way, Mixing Flanged Globe Valve



Application

This valve is typically used in large Air Handling Units (AHU) on heating or cooling coils. This valve is suitable for use in a hydronic system with variable flow.

Suitable Actuators

	Non-Spring	Spring	Electronic Fail-Safe
G780S	EVB(X), RVB(X)	AFB(X), 2*AFB(X)	AVKB(X), 2*GKB(X)

Technical Data

Service	chilled, hot water, up to 60% glycol
Flow Characteristic	linear
Controllable Flow Range	stem up - open B to AB
Size [mm]	3" [80]
End Fitting	125 lb flanged
Body	cast iron - ASTM A126 Class B (ASME B16.1)
Stem	316 stainless steel with Heater
Stem Packing	NLP EPDM (no lip packing)
Seat	316 stainless steel
Plug	stainless steel
Body Pressure Rating [psi]	ANSI 125
ANSI Class	ANSI 125 (up to 175 psi below 150°F)
Number of Bolt Holes	4
Max Inlet Pressure (Water)	150 psi (1034 kPa) @ 250°F
Media Temperature Range (Water)	-20°F to 350°F [-30°C to 176°C]
Max Differential Pressure (Water)	50 psi (345 kPa)
Ambient Temperature Range	**STEM HEATER**AC 24 V ± 10%, 50/60 Hz ± 5% approx 60 w
Rangeability	50:1
Cv	85
Weight	80.9 lb [36.7 kg]
Leakage	ANSI Class III
Servicing	Repack/Rebuild kits available

Flow Pattern

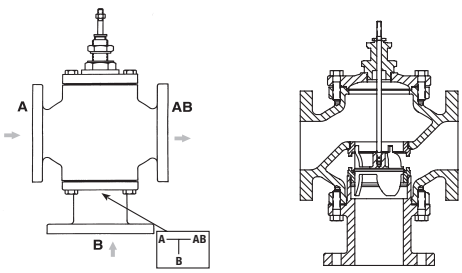

Dimensions (Inches [mm])

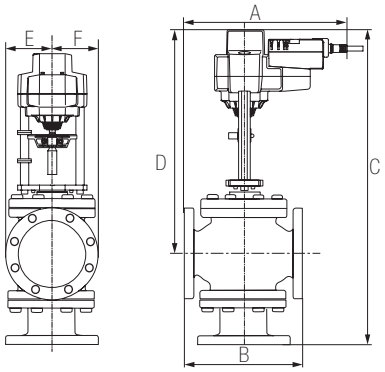

EVB, EVX, RVB, RVX

A	B	C	D	E	F
12.2" [310]	10" [254]	27" [686]	19" [483]	3.94" [100]	

Piping

The valves should be mounted in a weather-protected area in a location that is within the ambient limits of the actuator. Allow sufficient room for valve with actuator and for service. The preferred mounting position of the valve is with the valve stem vertical above the valve body, for maximum life. However, the assemblies can be mounted with valve stem vertical above the valve or up to 45 degrees in relation to the horizontal pipe. The actuators should never be mounted underneath the valve, as condensation can build up and result in a failure of the actuators. Do not reverse flow direction.

Date created, 01/19/2017 - Subject to change. © Belimo Aircontrols (USA), Inc.

G780S, 3-Way, Mixing Flanged Globe Valve

Dimensions (Inches [mm])

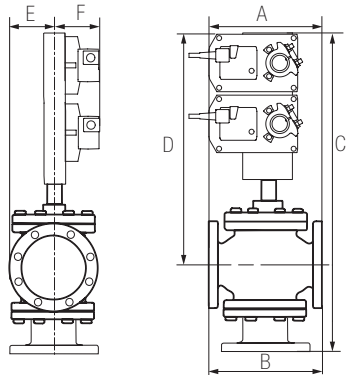

2*GMB, 2*GMX, 2*GKB, 2*GKX

A	B	C	D	E	F
12.2” [310]	10” [254]	30.53” [775]	22.5” [572]	3.75” [95]	5.25” [135]

Dimensions (Inches [mm])

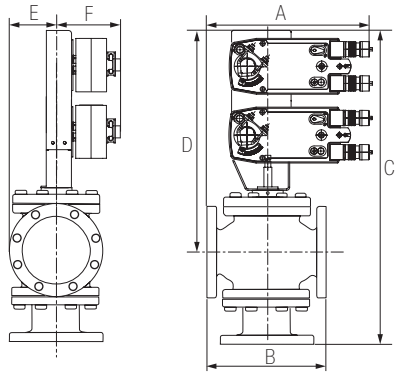

2*AFB, 2*AFX

A	B	C	D	E	F
12.2” [310]	10” [254]	30.53” [775]	22.5” [572]	3.75” [95]	5.25” [135]

Dimensions (Inches [mm])

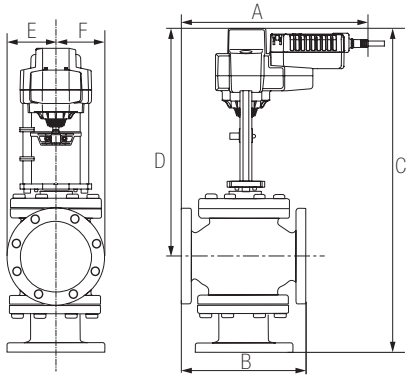

AVKB, AVKX

A	B	C	D	E	F
13” [332]	10” [254]	27” [686]	19” [483]	3.94” [100]	

Date created, 01/19/2017 - Subject to change. © Belimo Aircontrols (USA), Inc.

G780S, 3-Way, Mixing Flanged Globe Valve

Dimensions (Inches [mm])

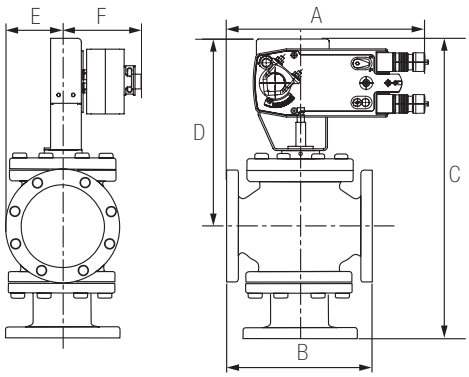

AFB, AFX

A	B	C	D	E	F
12.2” [310]	10” [254]	25.6” [650]	17.5” [445]	3.75” [95]	5.25” [135]

Date created, 01/19/2017 - Subject to change. © Belimo Aircontrols (USA), Inc.

EVB24-3

On/Off, Floating Point, Non-Spring Return, Linear, 24 V



Technical Data	
Power Supply	24 VAC ± 20%, 50/60 Hz, 24 VDC ± 10%
Power Consumption Running	3.5 W
Power Consumption Holding	0.5 W
Transformer Sizing	6 VA (class 2 power source)
Electrical Connection	3 ft, 18 GA plenum rated cable with 1/2" conduit connector protected NEMA 2 (IP54)
Overload Protection	electronic throughout full stroke
Electrical Protection	actuators are double insulated
Operating Range Y	on/off, floating point
Input Impedance	100 k Ω (0.1 mA), 500 Ω, 1000 Ω (on/off)
Feedback Output U	No Feedback
Stroke	2" [50 mm]
Linear Force	562 lbf [2500 N force]
Direction of Rotation (Motor)	reversible with built-in switch
Position Indication	stroke indicator on bracket
Manual Override	5 mm hex crank (3/16" Allen), supplied
Running Time (Motor)	90 sec, constant independent of load
Humidity	5 to 95% RH non-condensing
Ambient Temperature Range	-22°F to 122°F [-30°C to 50°C]
Storage Temperature Range	-40°F to 176°F [-40°C to 80°C]
Housing	NEMA 2, IP54, UL enclosure type 2
Housing Material	Aluminum die cast and plastic casing
Agency Listings†	cULus acc. to UL60730-1A/-2-14, CAN/CSA E60730-1:02, CE acc. to 2004/108/EC and 2006/95/EC
Noise Level (Motor)	<60 dB (A)
Servicing	maintenance free
Quality Standard	ISO 9001
Weight	5.7 lb [2.6 kg]

† Use flexible metal conduit. Push the listed conduit fitting device over the actuator's cable to butt against the enclosure. Screw in conduit connector. Jacket the actuators input wiring with listed flexible conduit. Properly terminate the conduit in a suitable junction box. Rated impulse Voltage 800V. Type of action 1. Control pollution degree 3.

Date created, 11/03/2016 - Subject to change. © Belimo Aircontrols (USA), Inc.

Wiring Diagrams

INSTALLATION NOTES

2 Actuators may be connected in parallel. Power consumption and input impedance must be observed.

3 Actuators may also be powered by 24 VDC.

18 Actuators with plenum cable do not have numbers; use color codes instead.

◆ Meets cULus requirements without the need of an electrical ground connection.

WARNING! LIVE ELECTRICAL COMPONENTS!

During installation, testing, servicing and troubleshooting of this product, it may be necessary to work with live electrical components. Have a qualified licensed electrician or other individual who has been properly trained in handling live electrical components perform these tasks. Failure to follow all electrical safety precautions when exposed to live electrical components could result in death or serious injury.

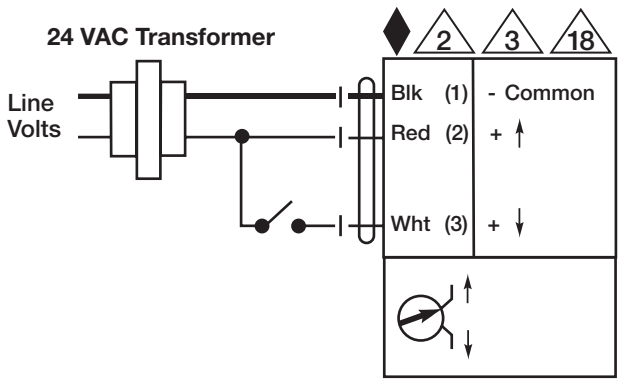

On/Off

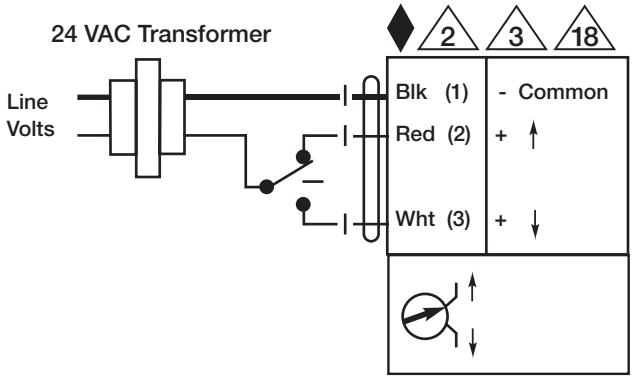

Floating Point

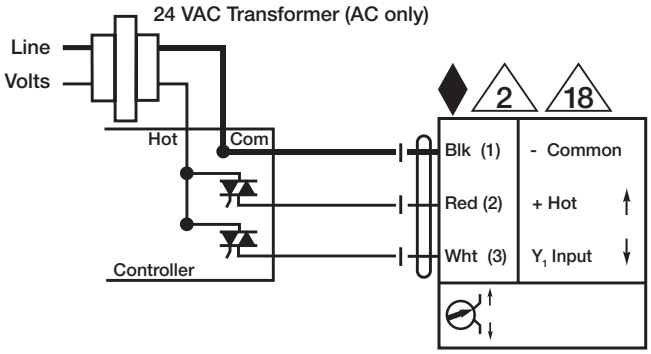

Triac Source

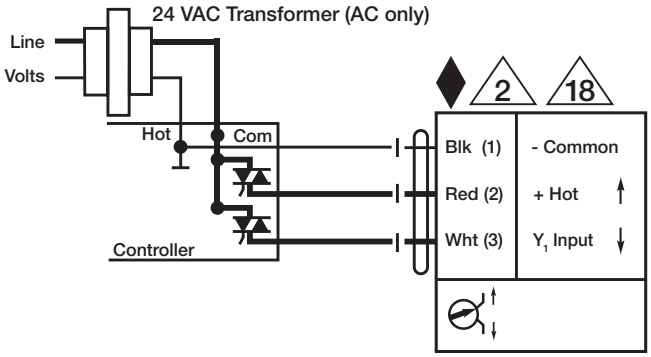

Triac Sink

Date created, 11/03/2016 - Subject to change. © Belimo Aircontrols (USA), Inc.