IM 447-9

Group: **WSHP**

Part Number: **107225603**

Date: **June 2006**

Console Water Source Heat Pump

Models WDA, WDB, WDD, WDE, WDF, WDG, WDH, WDS, WLA, WLB, WLC, WLL
WMA, WMB, WMC, WMD, WME, WMF, WMG, WMH, WMU, WMK, WML



Contents

Model Nomenclature 2
Checking for Damage 3
Installation 3,4
Electrical Connections 5
Cabinet Power Connections 5
Water Connections 6
Piping 7
Cleaning & Flushing System 7
Operating Limits 8
Electrical Data 8
Unit Operation 8
Wiring Diagrams – Mark IV/AC-Units 9,10
Control Options 11
Thermostats – Mark IV/AC-Units 12
Pump Restart Relay 13
MicroTech Control Units 14,15
Field Installed Options 16
Optional Outside Air Damper 18
Troubleshooting 18,19
Maintenance 19

©2006 McQuay International

McQuay® Air Conditioning

Downloaded from www.Manualslib.com manuals search engine

Model Nomenclature

NOTE: For illustration purposes only. Not all options available with all models.
Please consult a McQuay Sales Representative for specific availability.

McQuay WSHP Product Nomenclature

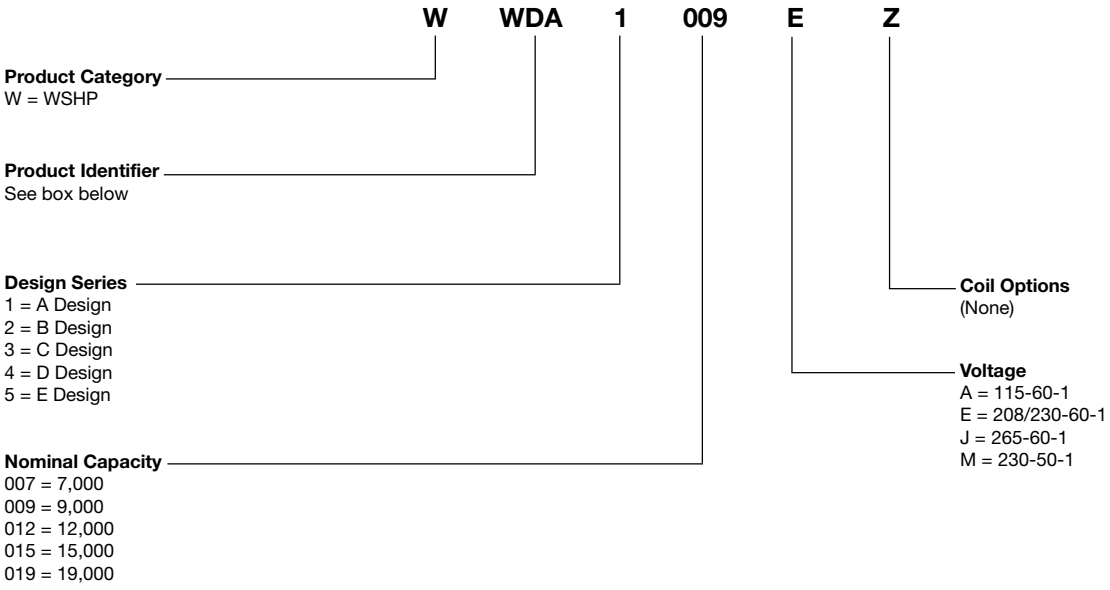

McQuay WSHP Product Identifiers

WDA	=	Flat Top Wall mtd./DDC Controls/Low Sill
WDB	=	Slope Top Wall mtd./DDC Controls/Low Sill
WDD	=	Slope Top Wall mtd./DDC Controls/Low Sill/Chassis Only
WDE	=	Slope Top Wall mtd./DDC Controls/Low Sill/Chassis Only
WDF	=	Flat Top Wall mtd./DDC Controls/High Sill
WDG	=	Flat Top Wall mtd./DDC Controls/High Sill/Less Board
WDH	=	Slope Top Wall mtd./DDC Controls/High Sill/Less Board
WDS	=	Slope Top Wall mtd./DDC Controls/High Sill
WLA	=	Slope Top Wall mtd./Mark IV/High Sill/Low Limit, NSB & Override
WLB	=	Flat Top Wall mtd./Mark IV/Low Sill/Low Limit, NSB & Override
WLC	=	Slope Top Wall mtd./Mark IV/Low Sill/Low Limit, NSB & Override
WLL	=	Flat Top Wall mtd./Mark IV/High Sill/Low Limit, NSB & Override
WMA	=	Slope Top Wall mtd./Mark IV/Low Sill
WMB	=	Flat Top Wall mtd./Mark IV/Low Sill
WMC	=	Flat Top Wall mtd./Mark IV/High Sill/Chassis Only
WMD	=	Flat Top Wall mtd./Mark IV/Low Sill/Chassis Only
WME	=	Flat Top Wall mtd./Mark IV/High Sill/European Spec.
WMF	=	Flat Top Wall mtd./Mark IV/High Sill
WMG	=	Slope Top Wall mtd./Mark IV/High Sill/Chassis Only
WMH	=	Slope Top Wall mtd./Mark IV/Low Sill/Chassis Only
WMJ	=	Flat Top Wall mtd./Mark IV/Low Sill/European Spec.
WMK	=	Flat Top Wall mtd./Mark IV/High Sill/Chassis Only/European Spec.
WML	=	Flat Top Wall mtd./Mark IV/Low Sill/Chassis Only/European Spec.

©McQuay International 2006

The information in this catalog supersedes and replaces previous (bulletins) with regards to McQuay Terminal Air Conditioning products. Illustrations cover the general appearance of McQuay products at the time of publication and McQuay reserves the right to make changes in design and construction at anytime without notice.

Downloaded from www.Manualslib.com manuals search engine

Checking for Damage

Upon receipt of the equipment, check carton for visible damage. Make a notation on the shipper's delivery ticket before signing. If there is any evidence of rough handling, the cartons should be opened at once to check for concealed damage. If any damage is found, notify the carrier within 48 hours to establish your claim, and request their inspection and a report. The Warranty Claims Department should then be contacted.

Do not stand or transport the machines on end. For storing, each carton is marked with "up" arrows.

In the event that elevator transfer makes upended positioning unavoidable, absolutely insure that the machine is in the normal upright position for at least 24 hours before operating.

Temporary storage at the jobsite must be indoors, completely sheltered from rain, snow, etc. High or low temperatures naturally associated with weather patterns will not harm the conditioners. Excessively high temperatures of 140˚F (60˚C) may deteriorate certain plastic materials and cause permanent damage. In addition, the solid-state circuit boards may experience operation problems.

Note: Care should be taken when handling this equipment. Rough handling can create damage to internal electrical and refrigeration components.

Installation

Installation and maintenance are to be performed by qualified personnel who are familiar with local codes and regulations, and experienced with this type of equipment. *Caution:* Sharp edges and coil surfaces are a potential injury hazard. Avoid contact with them.

General:

1. Units must be installed in accordance with all applicable codes.
2. To prevent damage, this equipment should not be operated for supplementary heating and cooling during the construction period.
3. Inspect the carton for any specific tagging numbers indicated by McQuay International per a request from the installing contractor. At this time, the voltage, capacity and model should be checked against the plans.
4. Check the unit size against the plans to be sure that the unit will be installed in the correct location.
5. Units should be kept in shipping carton until installed. At the time the unit is to be placed in its final position – and only then – should the carton be removed. Retain the carton and cut away one side and bottom. Take the remaining portion of the carton and place it over the unit. This will insure the unit is protected from paint spotting, dirt, dust and lint that can affect proper unit operation, and will also prevent needless cleaning adding to installation cost.
6. The installing contractor will find it beneficial to confer with other contractors; i.e., plumbing, electrical, pipe fitters, etc., before installing any conditioners.
7. Remove the front panel by removing a screw on each side of the cabinet at the subbase.
8. All piping and electrical wiring should be flexible so that vibrations are not transmitted to the building structure. Ensure all electrical connections are in place and tight.
9. Locate the unit in an area that allows easy removal or accessibility for service personnel to perform maintenance and repair.
10. If units are placed on a concrete floor, it is recommended that the floor be free from all construction debris that may add to the operating noise level of the unit. It may be advisable to place a portion of rubber matting under the unit to prevent distortion and/or vibration.

Unit Location

1. Console water source heat pumps are designed to be installed in a controlled environment.
2. All units are to be installed against a wall.
3. Each unit should be located on the architectural plans. The supply, return, and condensation piping should be located accordingly, making sure the piping will fit into the confines of the subbase and cabinet.

Installing the Unit

1. Consult job blueprints for unit location. Clean area where unit is to be installed, removing all construction dirt and debris.
2. Remove unit from shipping carton and save the carton. Remove the front panel by removing a screw on each end of the cabinet. Lift the cabinet up, forward and off.
3. Each chassis is mounted to cabinet backwrap and subbase assembly by six screws for shipment. Remove four screws, two on each side of the chassis at the subbase.
4. Position cabinet backwrap and subbase against the wall where unit is to be installed. Ensure adequate room exists for piping and electrical connection in the subbase by checking the connection end of the subbase.
5. Using a carpenter's square and level, make sure unit is level and that it is at a 90-degree angle with the wall and floor. (**Note:** If the floor and wall are not at right angles, it may be necessary to shim the subbase to insure proper installation. McQuay International will not accept responsibility for units that may need to be shimmed. Poor or inadequate installation could create noisy unit operation.)
6. The cabinet backwrap has slots on the back flange to mount the assembly to the wall. It is the contractor's responsibility to select the correct fastener for each unit.
7. After securing the subbase and backwrap assembly in place, insert the chassis if it has been removed. Next, the electrical connection should be made.

Downloaded from www.Manualslib.com manuals search engine

Figure 1. Cabinet backwrap &-subbase

*Total unit is 10 3/4" (273mm) deep. The cabinet extends beyond the subbase 1/4" (6mm) in the back and 1/2" (14mm) in the front.

Dimensions in inches

Unit Type	Unit Size	A	B	C
Standard	007 – 012	46	45	25
Height	015 – 019	54	53	25

Dimensions in mm

Unit Type	Unit Size	A	B	C
Standard	007 – 012	1168	1143	635
Height	015 – 019	1372	1346	635

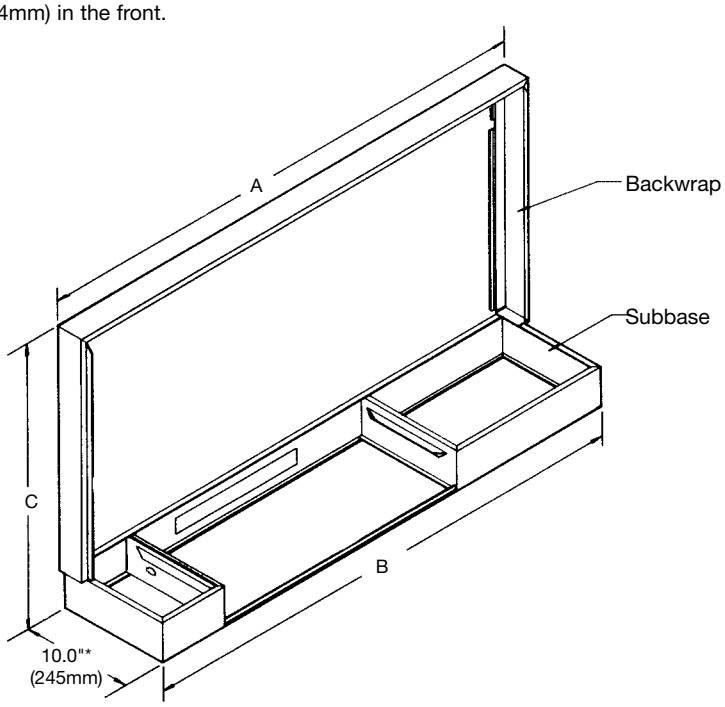

Figure 2. Chassis (Left-hand slope top unit shown)

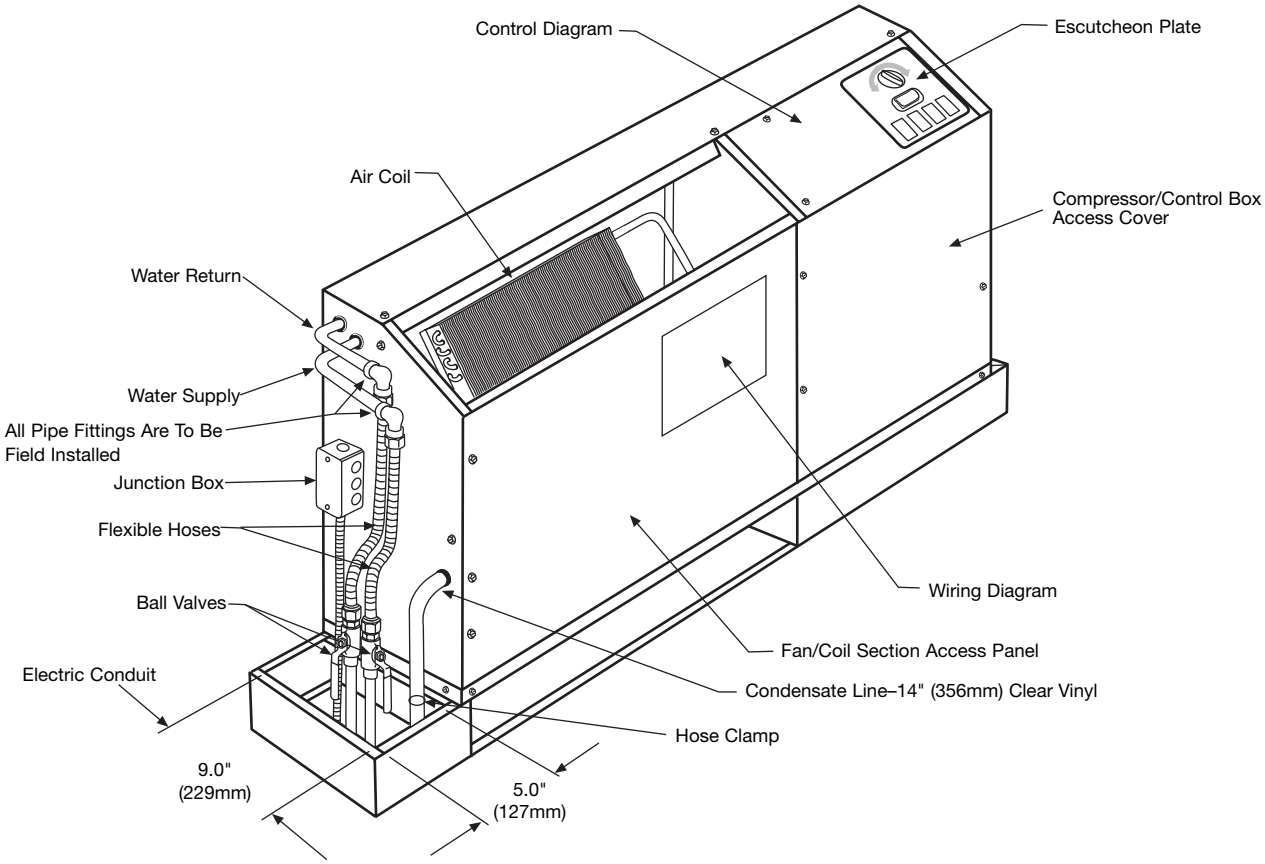

Downloaded from www.Manualslib.com manuals search engine

Electrical Connections

Standard Electrical Connection

Each chassis comes with a junction box mounted on the side of the chassis and contains the field electrical connection.

Note: If electrical wiring or conduit comes through the floor, all wires or conduit should be sealed at this point. It will prevent any condensation or water leakage that may occur due to lack of preventive maintenance. Each unit has an internal condensate trap but will require cleaning.

Note: We suggest wiring coming through the wall should also be sealed to stop cold air infiltration through the wall cavity which could affect unit thermostat operation.

Remove the junction box cover, selecting the proper knockout and remove it. Install a strain relief and pass the wires through the strain relief into the junction box making the connection and reinstall the junction box cover.

Note: Check the local code concerning correct electrical connection.

Cord & plug electrical connection (field installed)

Cord connected equipment comes with a box and appropriate voltage receptacle. However, a disconnect switch and fuses can also be provided in the box. As an option, the box comes factory mounted on the backwrap and is ready to be field wired to the incoming power. The box is mounted on the same side as the piping.

It is the responsibility of the installing contractor to make the proper electrical connection to the electrical box, using the same method as described in the standard electrical connection. See Figures 3 and 4.

Figure 3. Standard electrical connection – Junction box

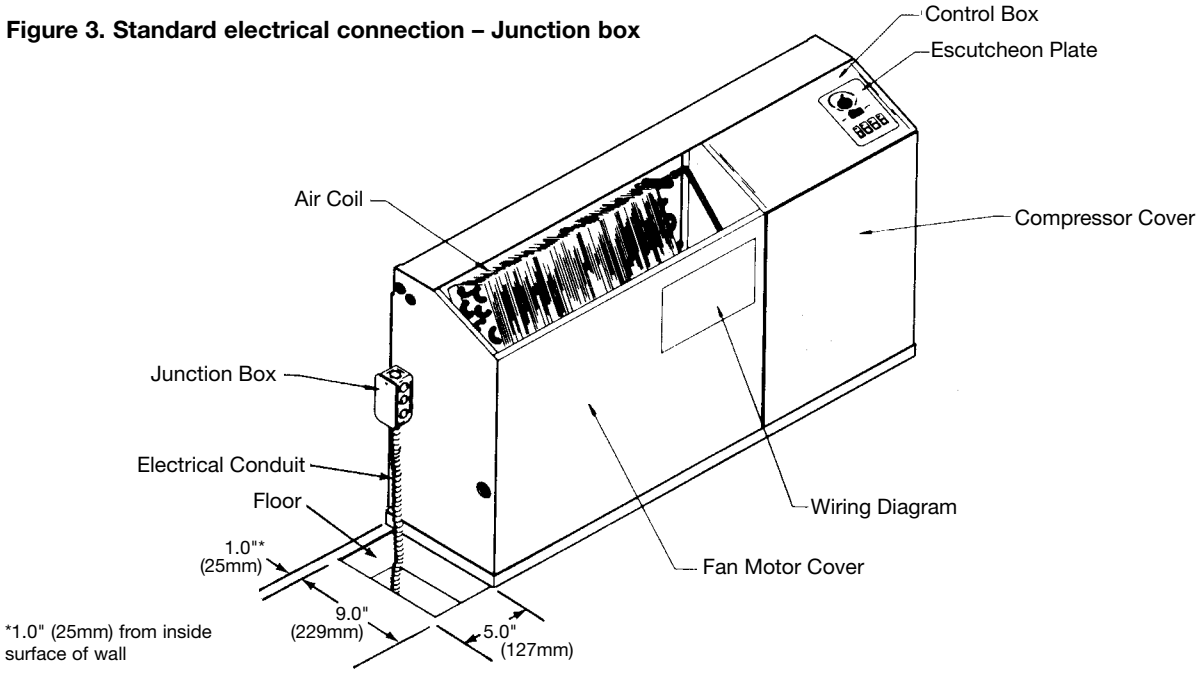

Figure 4. Cord & Plug Connection (Field Installed)

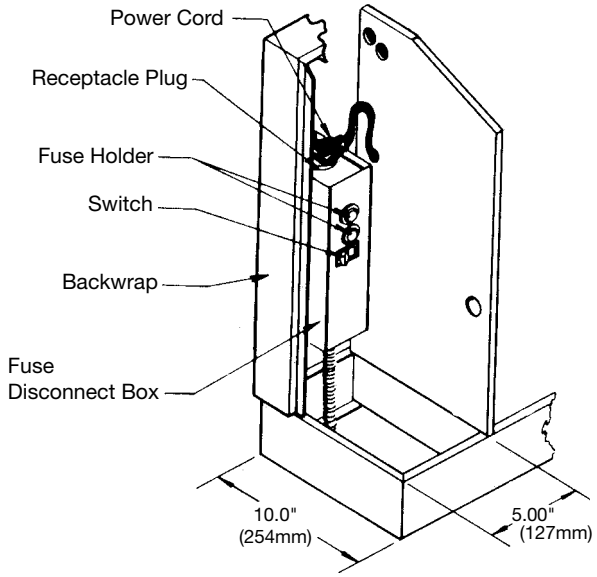

Cabinet Power Connection (Field Installed)

Receptacle, Fuses & Disconnect Switch
(Requires plug cord on chassis.)

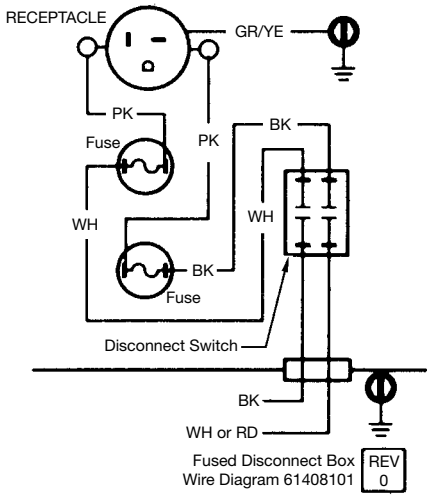

Downloaded from www.Manualslib.com manuals search engine

Water Connections

All piping connections should be made using good plumbing practices and in accordance with any and all local codes that may apply. **Note:** It will be helpful to read the "Piping" section on page eight.

Unit Piping Connection

Each heat pump is supplied with extended copper tubing on the water-to-refrigerant coil and 1/2" (12.7mm) OD tubing. The connections are for both the supply and return water connections.

Note: Valves – Shut off Combination Balancing Valves, Hoses – Supply Return, Condensate Drain Hose and 90° Elbows are all factory available as accessories, (to be mounted in the field by others).

Shutoff/Balancing Valve

Each heat pump requires a shutoff valve on both the supply and return lines for easy serviceability and removal if it becomes necessary.

We suggest using our combination shutoff/balancing valves installed in the field between the contractor's piping and the heat pump unit. The valve installed on the return line acts as a balancing valve to adjust the proper water flow. Each shutoff/balancing valve has 1/2" FPT × 1/2" FPT threaded connections.

Suggested Hose Kit Installation

Field installed piping can be brought up from the floor or through the wall. **Note:** Make sure the pipes fit the confines of the piping compartment of the heat pump unit. See Figure 5.

Attach the field installed combination shut/off balancing valve to the building water supply and return piping. Next add the female pipe adapter connection to unit supply and return coil connection by sweating them in place using silver solder.

Next, using the specified hose kit, screw the fixed end into the shut-off/balancing valve. Remove the 1/2" adapter from the other end of the hose. Insert the adapter into the female fitting. Using two crescent wrenches, one to hold the pipe connection and the second to tighten the adapter, insert the swivel end of the hose on the adapter and tighten. This completes the hose connection to standard heat pump equipment.

Adding Motorized & Valve Assemblies

All console water source heat pumps can be field installed with a motorized valve. All valves are mounted on the return line of each unit. All valve assemblies terminate with 1/2"-NPT threaded connections and will also accommodate factory supplied hose kits. When installing the hose kits on valve assemblies, use the same method as outlined in "Suggested Hose Kit Installation" above.

Note: All plumbing connections are made the same way whether or not the unit has valve packages. Whether or not you utilize our hose kits and shutoff/balancing valve all piping connections will have to conform with all local piping and building codes. The ability to remove the unit in order to perform repairs is imperative.

Condensate Hose Connection

Each unit is supplied with a 3/4" (19mm) I.D. clear vinyl condensate hose internally trapped within the chassis. The hose extends 14" (356mm) out of the chassis within the piping compartment to reach the floor or the back wall.

Field condensate piping must enter within the confines of the cabinet (back wall or floor) similar to the supply and return piping. Slide the vinyl hose over the condensate pipe and clamp it.

Figure 5. Hose kit installation (Field Installed)

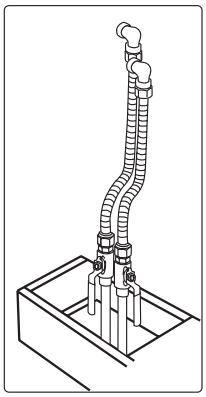

NOTE: Valves, (shut-off combination balancing valves), Hoses, (supply and return, condensate drain hose), also 90° elbows are all factory available as accessories, to be mounted in the field by others.

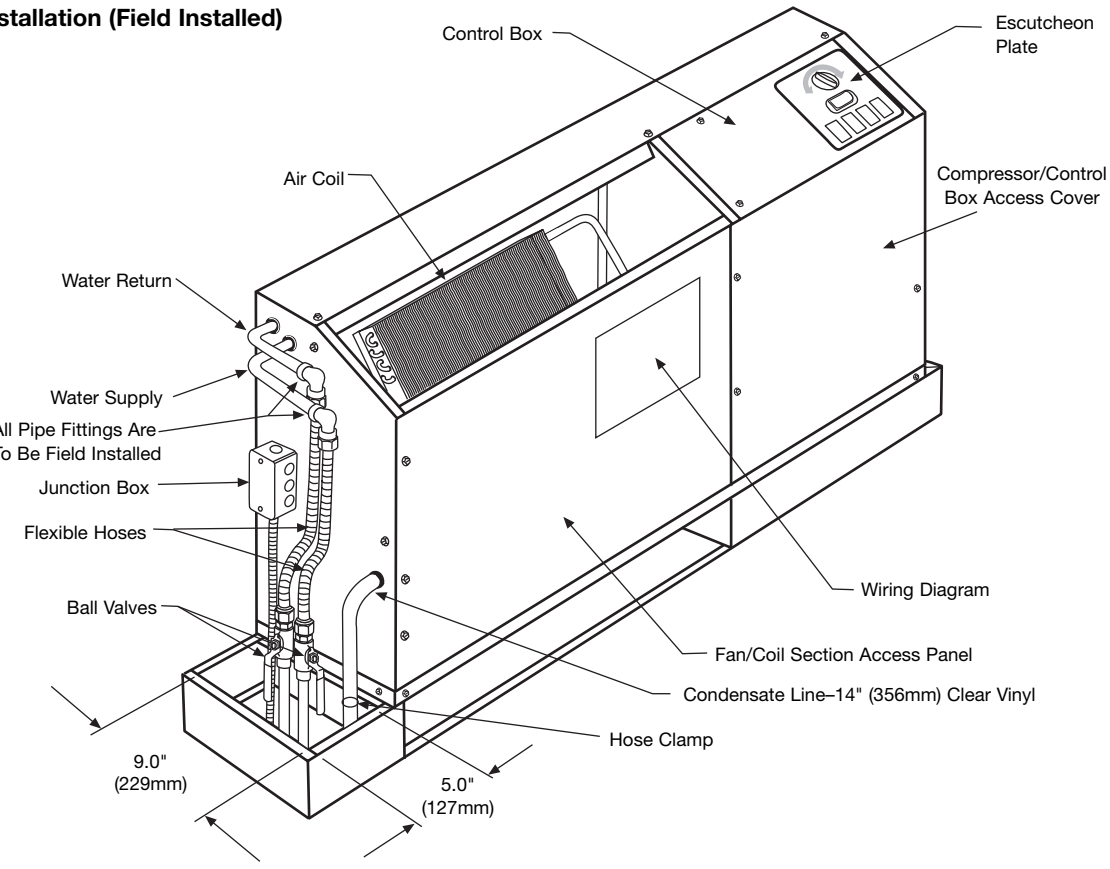

Downloaded from www.Manualslib.com manuals search engine

Piping

1. All units are recommended to be connected to supply and return piping in a two-pipe reverse return configuration. A reverse return system is inherently self-balancing and requires only trim balancing where multiple quantities of units with different flow and pressure drop characteristics are connected to the same loop. A simple way to check for proper water balance is to take a differential temperature reading across the water connections when in the cooling mode. To insure proper water flow, the differential should be 10˚F to 14˚F (-5˚C to -8˚C).

   A direct return system may also be made to work acceptably, but proper water flow balancing is more difficult to achieve and maintain.
2. The piping can be steel, copper or PVC, but must comply with local codes.
3. Supply and return runouts are usually connected to the unit by short lengths of high pressure flexible hose which are sound attenuators for both unit operating noise and hydraulic pumping noise. **Note:** When using the flex hose connections you must add a 90° elbow kit, for making the connection. This elbow is sweat on one end – female 1/2" FPT on the other end. McQuay Part No. 106066402. One end of the hose should have a swivel fitting to facilitate removal for service. Hard piping can also be brought directly to the unit, although it is not recommended since additional noise may be generated. See Figure 5 for typical piping setup.
4. Some flexible hose threaded fittings are supplied with sealant compound. If not, apply Teflon tape to assure a tight seal.
5. Supply and return shutoff valves are required at each conditioner. The return valve is used for balancing and should have a “memory stop” so that it can always be closed off, but can only be re-opened to the proper position for the flow required.
6. No unit should be connected to the supply and return piping until the water system has been cleaned and flushed completely. After the cleaning and flushing has taken place, the initial connection should have all valves wide open in preparation for water system flushing.
7. Condensate piping can be steel, copper, or PVC. Each unit is supplied with a clear vinyl condensate hose.
8. Units are internally trapped. Copper or PVC condensate lines can be used. A means of disconnection must be furnished to facilitate chassis removal.
9. No point of the drain system may be above the drain pan of any unit.
10. Automatic flow control devices must not be installed prior to system cleaning and flushing.
11. A high point of the piping system must be vented.
12. Check local code for the need for electric fittings.

Cleaning and Flushing System

1. Prior to first operation of any conditioner, the water circulating system must be cleaned and flushed of all construction dirt and debris.

   If the conditioners are equipped with water shutoff valves, either electric or pressure operated, the supply and return runouts must be connected together at each conditioner location. This will prevent the introduction of dirt into the unit. Additionally, pressure operated valves only open when the compressor is operating.

Figure 6.
Temporary Connection for Flushing System Piping

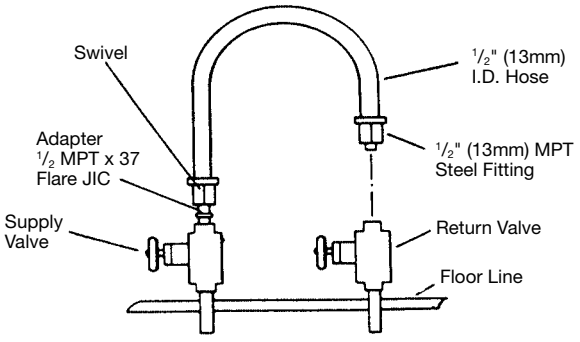

2. The system should be filled at the city water makeup connection with all air vents open. After filling, vents should be closed.

   The contractor should start main circulator with pressure reducing valve makeup open. Vents should be checked in sequence to bleed off any trapped air to assure circulation through all components of the system.

   Power to the heat rejector unit should be off, and the supplementary heat control set at 80˚F (27˚C).

   While circulating water, the contractor should check and repair any leaks in the piping. Drains at the lowest point(s) in the system should be opened for initial flush and blowdown, making sure city water fill valves are set to make up water at the same rate. Check the pressure gauge at pump suction, and manually adjust the makeup to hold the same positive steady pressure, both before and after opening the drain valves. Flush should continue for at least two hours, or longer if required, to see clear, clean drain water.
3. Supplemental heater and circulator pump should be shut off. All drains and vents should be opened to completely drain down the system. Short circuited supply and return runouts should now be connected to the conditioner supply and return connections. Teflon tape is recommended versus pipe dope for pipe thread connections. Use no sealers at the swivel flare connections of hoses.
4. Trisodium phosphate was formerly recommended as a cleaning agent during flushing. However, many states and localities ban the introduction of phosphates into their sewage systems. The current recommendation is to simply flush longer with 80˚F (27˚C) water.
5. Refill the system with clean water. Test and treat as required to leave the water slightly alkaline (pH 7.5 to 8.5). The specified percentage of antifreeze may also be added at this time. **Use commercial grade antifreeze designed for HVAC systems only. Do not use automotive grade antifreeze.**
6. Set the system control and alarm panel heat add setpoint to 70˚F (21˚C) and heat rejection setpoint to 85˚F (29˚C). Supply power to all motors and start the circulating pumps. After full flow has been established through all components, including the heat rejector (regardless of season), and air vented and loop temperatures stabilized, each of the conditioners will be ready for check, test, and start-up and for air and water balancing.
7. It is not McQuay International’s policy to make recommendations on water treatment. The general contractor or owner should contact a local water treatment company regarding water treatment. However, this topic is critical and care should be taken to make sure it is done properly to prevent problems related to flow. A fouled closed loop water system will lead to premature component failure.

Downloaded from www.Manualslib.com manuals search engine

Operating Limits

Environment
This equipment is designed for indoor installation **only.** Sheltered locations such as attics, garages, etc., generally will not provide sufficient protection against extremes in temperature and/or humidity, and equipment performance, reliability, and service may be adversely affected.

Additional Information
Units are designed to start and operate with entering air at 40˚F (4˚C), with entering water at 70˚F (21˚C), with both air and water at the flow rates used in the ARI-Standard 320-86 rating test, for initial start-up in winter.

Note: *This is not a normal or continuous condition. It is assumed that such a start-up is for the purpose of bringing the building space to occupancy temperature.*

Air and Water Limits

	Cooling	Heating
Min. Ent. Air ① ②	65˚F (18˚C)	55˚F (14˚C)
Normal Ent. Air. db/wb	80/67˚F (27/19˚C)	70˚F (21˚C)
Max. Ent. Air ① ②	90˚F (32˚C)	80˚F (27˚C)

Water Enthalpy

	Cooling	Heating
Min. Ent. Air ① ②	60˚F (16˚C)	55˚F (14˚C)
Normal Ent. Air. db/wb	85˚F (29˚C)	70˚F (21˚C)
Max. Ent. Air ① ②	110˚F (43˚C)	90˚F (32˚C)

① At ARI flow rate.
② Maximum and minimum values may not be combined. If one value is at maximum or minimum, the other two conditions may not exceed the normal condition for standard units.

Electrical Data

General
1. Be sure the available power is the same voltage and phase as that shown on the unit serial plate. **Line and voltage wiring must be done in accordance with local codes or the National Electrical Code, whichever is applicable.**
2. Apply correct line voltage to the unit. A disconnect switch near the unit is required by code. Power to the unit must be sized correctly and have dual element (Class RK5) fuses or HACR circuit breaker for branch circuit overcurrent protection. See the nameplate for correct ratings.
3. All 208-230V single phase units are factory wired for 208 volt operation unless specified for 230 volts.

Operating Voltages:
115/60/1 . . . . . 104 volts min.; 127 volts max.
208-230/60/1 . . . . . 197 volts min.; 253 volts max.
265/60/1 . . . . . 238 volts min.; 292 volts max.
230/50/1 . . . . . 197 volts min.; 253 volts max.

Note: Voltages listed are to show voltage range. However, units operating with overvoltage or undervoltage for extended periods of time will experience premature component failure.

Unit Operation

General
Note: At start-up of unit, ensure that temperature, flow rate and voltage are within specified limits required for proper unit operation. Each unit has its own control or remote control, utilizing an internal thermostat (unit mounted) and touch-pad selector switch or a wall mounted thermostat (remote control units).

Mark IV/AC-Control Units
Each unit has a Mark IV/AC version printed circuit board. Its control is available in unit mounted or remote wall thermostat. The low voltage output from the low voltage terminal strip on the control board is always 24 volts AC. Terminals F and V on the low voltage terminal strip supply 24 volts DC-power.

Continuous Fan: Units are factory wired for continuous operation. When power is applied and the start switch is depressed, the fan will run.

Cooling or Heating – Auto Operation: Rotate the thermostat knob to either warmer or cooler. Select fan speed. Depress the start button. Unit will start within 0 to 32 seconds.

Lockout Circuit: Each unit has its own lockout circuit to lock out compressor operation when an abnormal condition should appear. During unit operation, the compressor will be automatically turned off due to one of the two safety openings. High pressure is set at 400 psi (2760 kPa) and low temperature switch is set at 28˚F (-2˚C). Condensate overflow and brownout protection are also included.

Remote Reset of Automatic Lockouts: The Remote Reset feature provides the means to remotely reset automatic lockouts generated by high-pressure and/or low-temperature (in heating) faults. When the Mark IV board is in automatic lockout due to one of these faults, and the cause of the fault condition has been alleviated, energizing the O-terminal for 10 seconds or more will force the Mark IV board to clear the lockout. A unit power cycle can also be used to clear an automatic lockout if the conditions causing the fault have been alleviated.

Fault Retry To Minimize Nuisance Trips: The Fault Retry feature helps to minimize nuisance trips of automatic lockouts caused by high-pressure and/or low-temperature (in heating) faults. This feature clears faults the first two times they occur within a 24-hour period and triggers an automatic lockout on the 3rd fault. The retry count is reset to zero every 24 hours.

Cooling or Heating – Manual Operation: Rotate the thermostat knob to either warmer or cooler. Select fan speed, depress the heat or cool button, and unit will start within 0 to 32 seconds.

The Mark IV/AC-circuit board system has built-in features such as random start, compressor time delay, night setback, load shed, shutdown, condensate overflow protection, defrost cycle, brownout, and LED/fault outputs. Figure 7 shows the LED and fault output sequences. The 24 volt low voltage terminal strip is set so R-G energizes the fan. R-W1 energizes the fan and compressor and reversing valve for heating operation.

The reversing valve is set up to be energized in the heating mode. The circuit board has a fan interlock circuit to energize the fan whenever the compressor is on.

The Mark IV/AC control board has a lockout circuit to stop compressor operation if any one of its safeties opens (high pressure or low temperature). If the low temperature thermostat opens, the unit will go into the cooling mode for 60 seconds to defrost any slush in the water-to-refrigerant

Downloaded from www.Manualslib.com manuals search engine

heat exchanger. After 60 seconds, the compressor is locked out. If the condensate sensor detects a filled drain pan, the compressor operation will be suspended only in the cooling mode. The unit is reset by opening and closing the disconnect switch on the main power supply to the unit in the event the unit compressor operation has been suspended due to low temperature (freezestat) switch, or high pressure switch.

The Mark IV/AC control circuit has a fault output signal to an LED on a wall thermostat. Figure 7 shows in which function the fault output is “on” (sending a signal to the LED).

Figure 7.

Indication	LED's			Fault Output
	Yellow	Green	Red	
Normal Mode	Off	On	Off	Off
High Pressure Fault	Off	Off	Flash	On
Low Temperature Fault*	Flash	Off	Off	On
Condensate Overflow	On	Dim	Off	On
Brown-out	Off	Flash	Off	On
Load Shed	Off	Off	On	Off
Unoccupied Mode	On	On	Off	Off
Unit Shutdown	Off	Flash	Off	On

Note: It will require removal of the front panel and control box cover in order to view the PC board.

*In heating mode only.

Typical Wiring Diagrams for Units with Mark IV/AC Controls

60 Hertz Mark IV MCO Boilerless Constant Fan

Component Layout

1. Tap-Touch Switch
2. Thermostat
3. Terminal Block
4. PC Board
5. Transformer
6. Boilerless Relay
7. Shutdown Relay
8. Auxiliary Relay
9. Heater Relay
10. Water Reg Valve Relay
11. Low Limit Thermostat
12. Night Setback Thermostat
13. Override Switch
14. Terminal Board 1
15. Terminal Board 2
16. Stop/Start Switch
17. Standby Electric Heat Switch
18. Boilerless Fan Relay

>> Plug Connection
TB Terminal Block
ACO Automatic Change Over
MCO Manual Change Over
BR Boilerless Relay
HR Heater Relay

Notes

1. Terminal block on PC board provides 24 VAC at terminals C and R. All other terminals are 24 VDC output.
2. All temperature and pressure switches are normally closed.
3. Component layout is typical, some components shown may not be used.
4. Field supplied relays installed on the unit terminals W1, W2, Y1, Y2 and G may introduce electrical noise. Never install relay coils in series with the inputs.

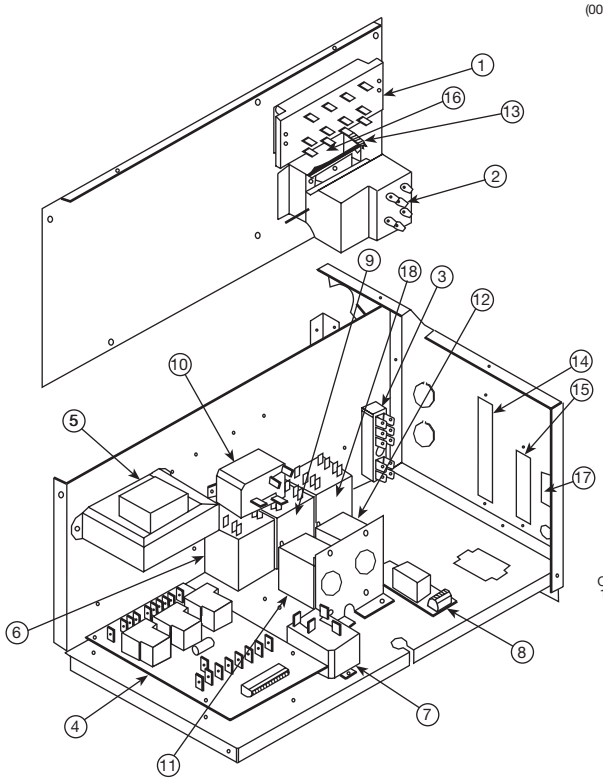

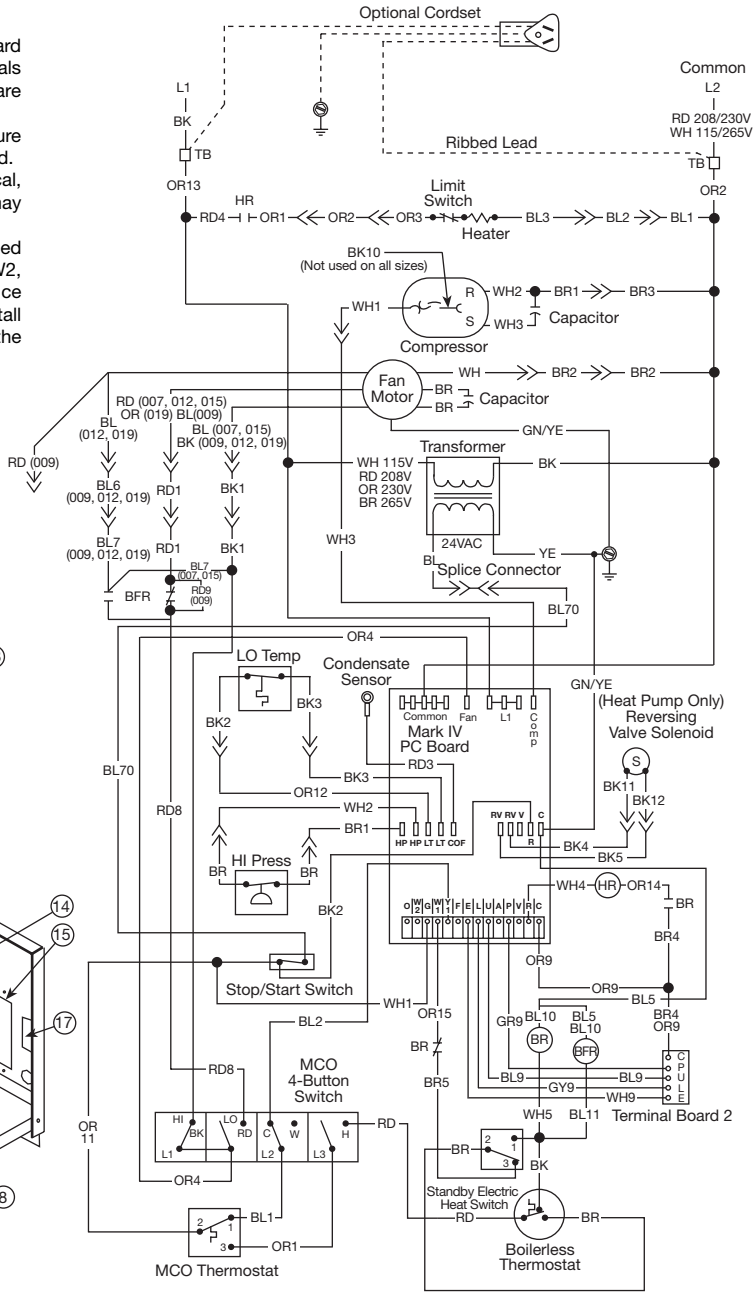

Downloaded from www.Manualslib.com manuals search engine

Typical Wiring Diagrams for Units with Mark IV/AC Controls

50 Hertz Mark IV MCO Boilerless Constant Fan

Component Layout

1. Tap-Touch Switch
2. Thermostat
3. Terminal Block
4. PC Board
5. Transformer
6. Boilerless Relay
7. Shutdown Relay
8. Auxiliary Relay
9. Heater Relay
10. Water Reg Valve Relay
11. Low Limit Thermostat
12. Night Setback Thermostat
13. Override Switch
14. Terminal Board 1
15. Terminal Board 2
16. Stop/Start Switch
17. Standby Electric Heat Switch

>> Plug Connection
TB Terminal Block
ACO Automatic Change Over
MCO Manual Change Over
BR Boilerless Relay
HR Heater Relay

Notes

1. Terminal block on PC board provides 24 VAC at terminals C and R. All other terminals are 24 VDC output.
2. All temperature and pressure switches are normally closed.
3. Component layout is typical, some components shown may not be used.
4. Field supplied relays installed on the unit terminals W1, W2, Y1, Y2 and G may introduce electrical noise. Never install relay coils in series with the inputs.

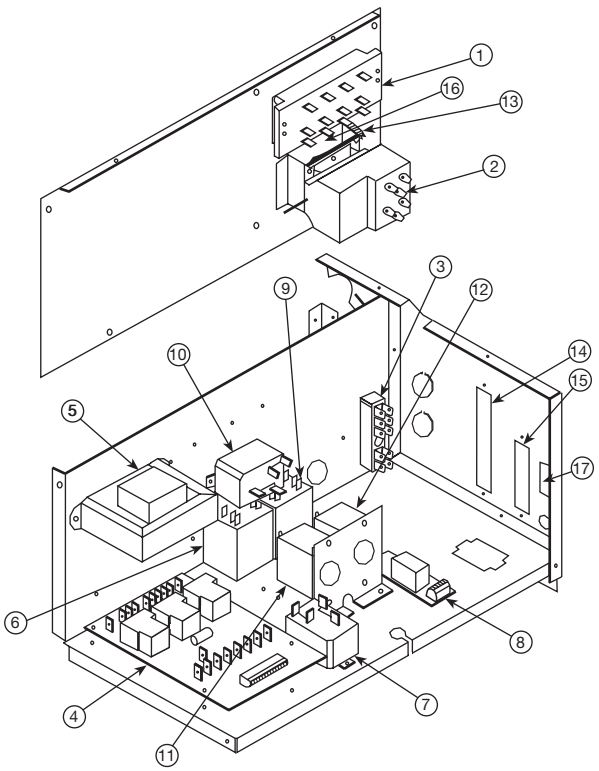

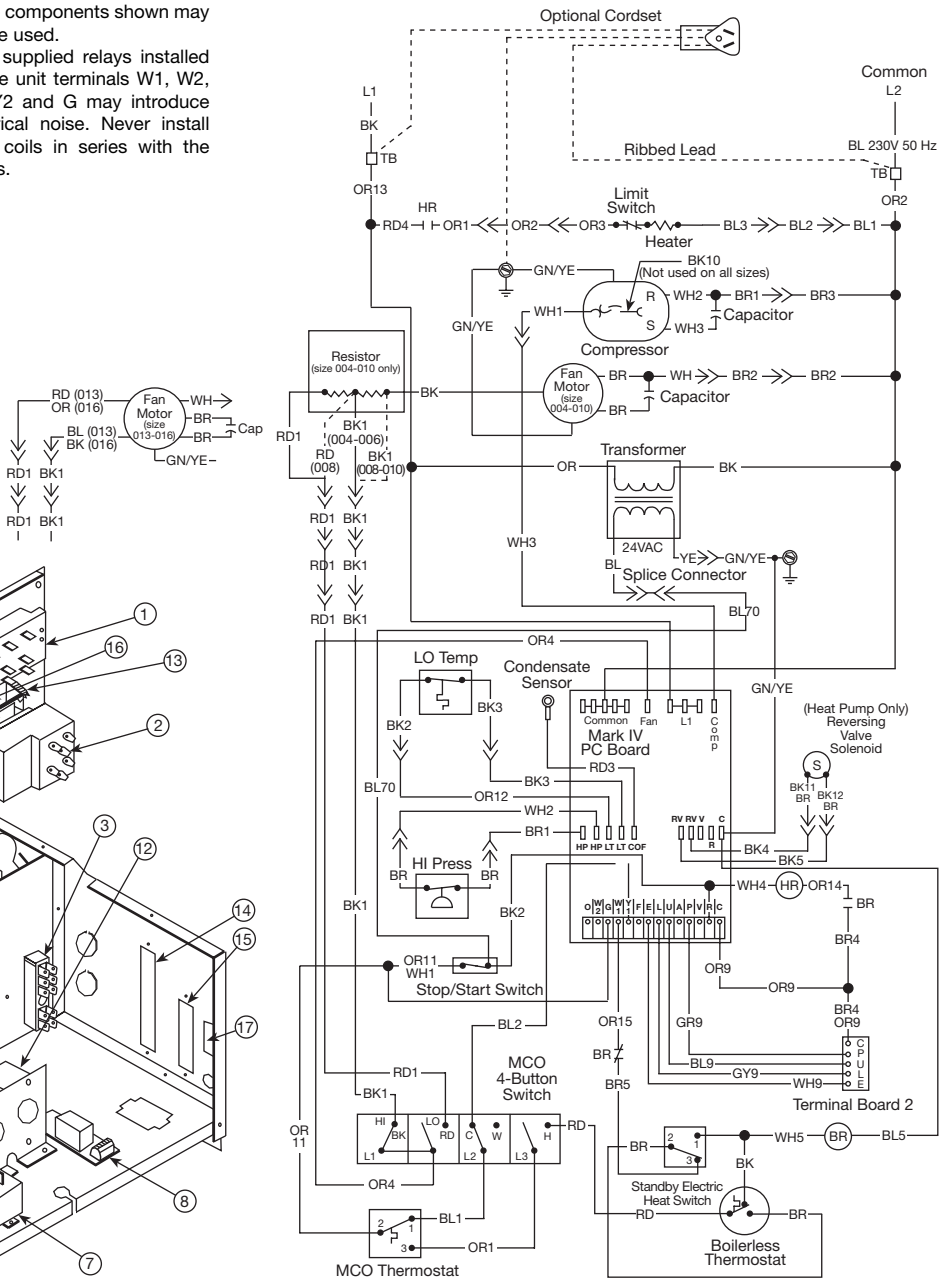

Downloaded from www.Manualslib.com manuals search engine

Motorized Valve & Relay for Unit Sizes 007 to 019

Wired as shown below the motorized valve will open on a call for compressor operation. Valves for unit sizes 007 to 019 are ½″ power-open spring-return. Other thermostat combinations may be used. Valve and auxiliary relay are purchased separately.

Note: The wiring shown below can only be used when the "P" terminal is not being used as a pump restart signal to other equipment. If the "P" terminal must be used as a pump restart signal to other equipment, then wire the auxiliary relay's yellow wire to "Y1", white wire to "W1", and orange wire to "C", then the valve will open on a call for occupied heating or cooling from the thermostat.

Motorized Valve Relay (P/N 859004354)

(P/N Valve N/O 106071401) (P/N Valve N/C 106071301)

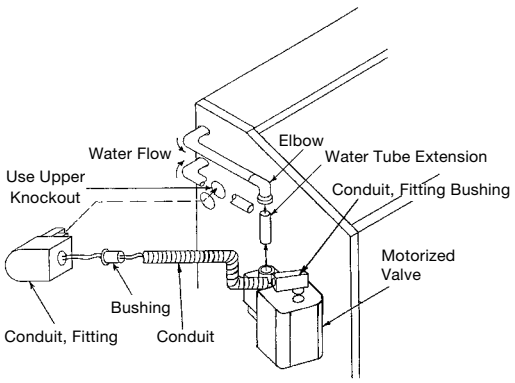

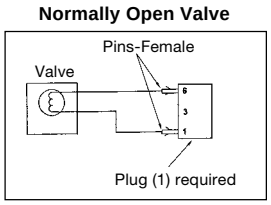

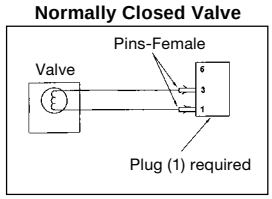

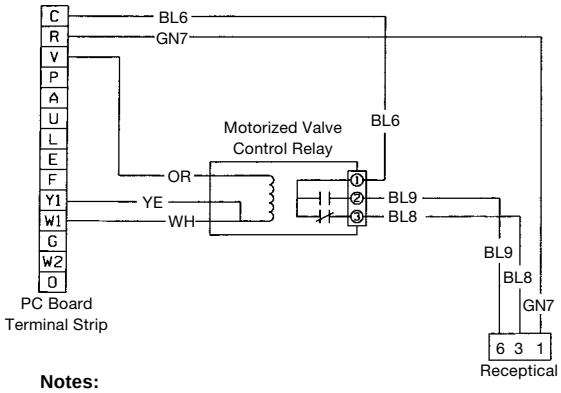

Notes:

1. Use soft solder process on water tubing outside of chassis.
2. Route wires along with power leads.
3. Left hand installation shown - right hand installation is "mirror" opposite.
4. Motorized valve (511) to be parallel to the end panel.
5. Copper to be washed prior to soldering.
6. Route conduit so it does not interfere with manual operation of motorized valve.

Control Options on Mark IV/AC Units

Auxilliary Relay (P/N 106059701)

WSHP Mark IV/AC Board Low Voltage Terminal Strip

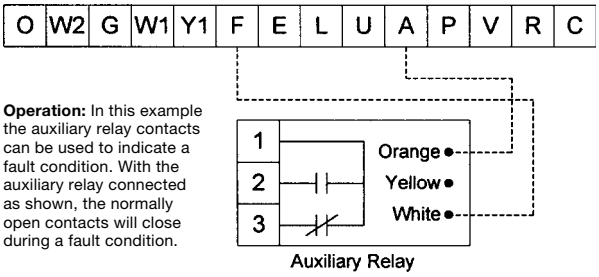

Operation: In this example the auxiliary relay contacts can be used to indicate a fault condition. With the auxiliary relay connected as shown, the normally open contacts will close during a fault condition.

The auxiliary relay is designed to interface external equipment with the Mark IV/AC board. The auxiliary relay has been provided with the components necessary to protect from electrical damage that may occur to the Mark IV/AC board when using standard off-the-self relays. The auxiliary relay can be used to provide fault signals, unit operation signals, or to provide a means for remote equipment to control the Mark IV/AC board. The orange, yellow, and white connections are short flying leads pre-attached to the board. The diagrams shown are some connection examples.

WSHP Mark IV/AC Board Low Voltage Terminal Strip

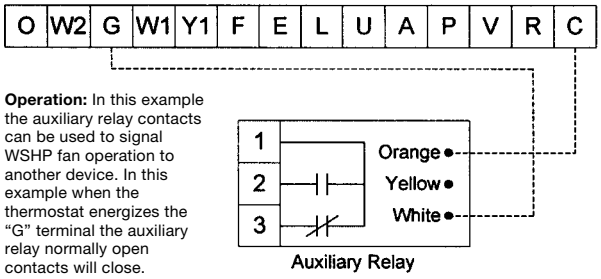

Operation: In this example the auxiliary relay contacts can be used to signal WSHP fan operation to another device. In this example when the thermostat energizes the "G" terminal the auxiliary relay normally open contacts will close.

WSHP Mark IV/AC Board Low Voltage Terminal Strip

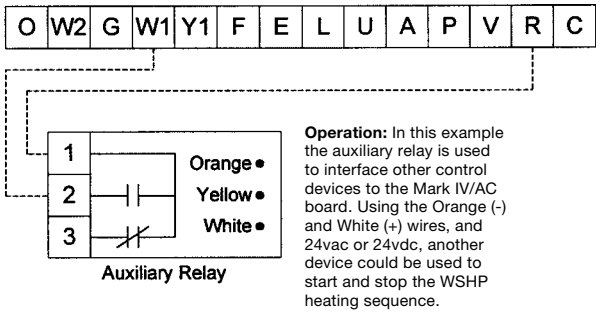

Operation: In this example the auxiliary relay is used to interface other control devices to the Mark IV/AC board. Using the Orange (-) and White (+) wires, and 24vac or 24vdc, another device could be used to start and stop the WSHP heating sequence.

Downloaded from www.Manualslib.com manuals search engine

Thermostat Connection Diagrams
Mark IV/AC Units – Unit Sizes 007 to 019

7-Day Programmable Electronic Thermostat (P/N 107095901)

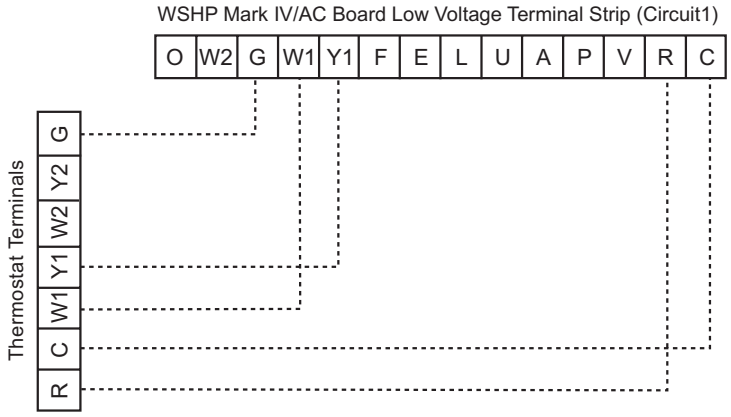

Includes Thermostat and Wall Plate.

Refer to the installation, operation & application guide (LIA217) for thermostat 107095901 installation details

Non-Programmable Electronic Thermostat (P/N 668054201)

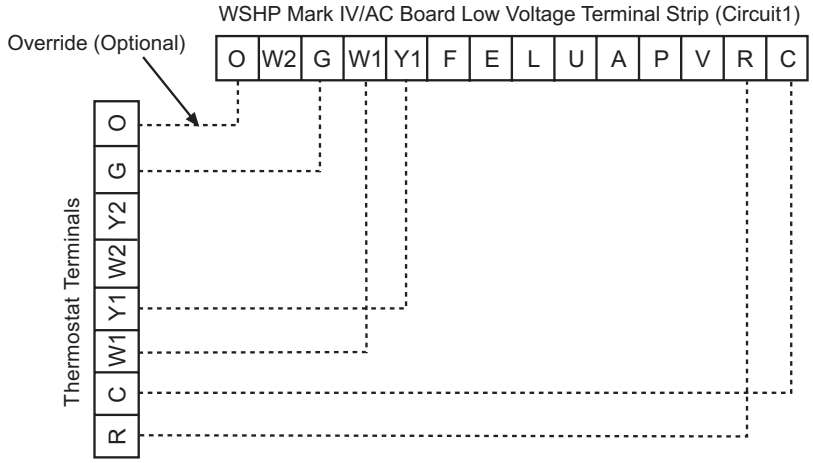

Includes Thermostat and Wall Plate.

Refer to the installation, operation & application guide (LIA204-4) for thermostat 668054201 installation details

Optional Remote Sensor (P/N 667720401)

1. Remove cover from remote sensor housing.
2. Select an appropriate location for mounting the remote sensor.
3. Mount remote sensor unit using hardware provided.
4. Install two strand shielded wire between remote sensor and thermostat. Shielded wire must be used.

Do not run remote sensor wire in conduit with other wires.

- Wire 1 should run between the S1 terminal on the thermostat and the S1 terminal on the remote sensor
- Wire 2 should run between the S2 terminal on the thermostat and the S2 terminal on the remote sensor
- Connect the shielding of the wire to the S2 terminal on the thermostat

5. Disable the main sensor (R12) on the thermostat by cutting it from the circuit board.

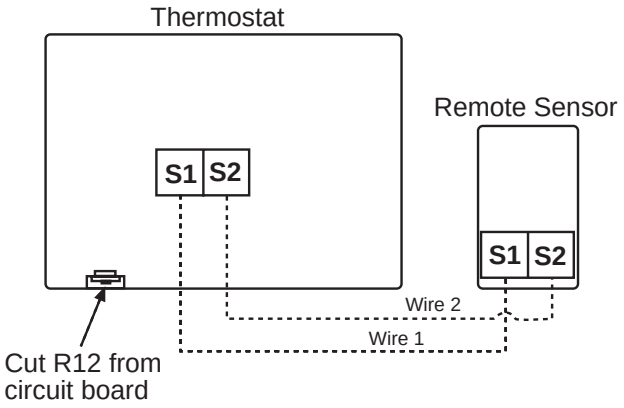

Downloaded from www.Manualslib.com manuals search engine

Pump Restart Relay Kit P/N 061419001

Used as an option with the Mark IV/AC board, the pump restart relay kit provides a means to alert the loop water controller that water flow is required by a WSHP so that the system pump can be started. This option is typically used in installations where the pump may be shut off when there is no need for water flow (i.e. temperature OK, etc.). Typically only one pump restart relay kit is required per installation as up to 200 Mark IV/AC boards can be “daisy-chained” together.

The Mark IV/AC “P” terminal is used to determine WSHP compressor operation. Wired as shown below, when compressor operation is required, the Mark IV/AC “P” terminal will change state causing a contact closure between terminal 58 and 64 signaling the loop water control (LWC) panel to restart the loop pump if Off.

The pump restart relay kit is typically mounted within one WSHP or within the LWC panel, whichever is more convenient, diagrams are provided below for each location. To install the relay, remove the cover on the double-faced tape provided on the relay and attach the relay either to the inside of the LWC panel (adjacent to circuit breaker CB1 and terminal block TB3) or in the WSHP control box (in a convenient location), then wire as shown below.

Wiring when Installed within the LWC Panel

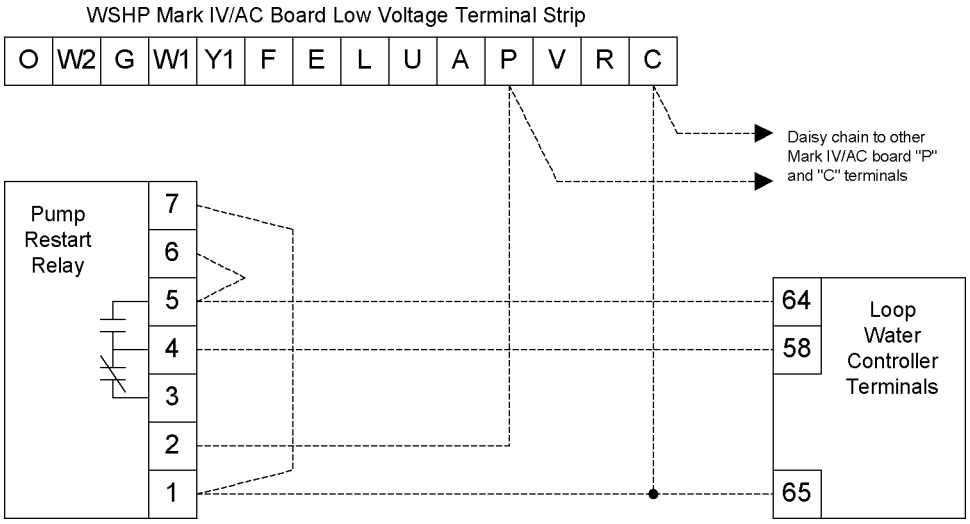

Wiring when Installed within a WSHP Control Box

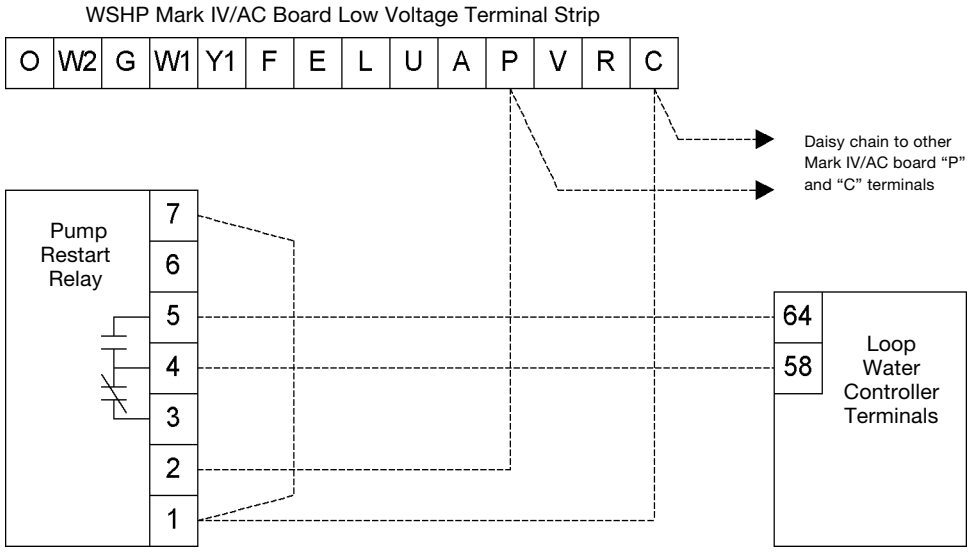

Downloaded from www.Manualslib.com manuals search engine

Multiple Unit Control Panel for Mark IV

Up to 3 Units (Part No. 056794201)

The multiple unit control board is an accessory used when you need to control up to 3-units from a single thermostat. The board is typically mounted in the unit control box closest to the thermostat. A maximum of 2 boards may be used together if up to 6-units must be connected and controlled from a single thermostat.

This version of the board uses VAC relays and should not be used in combination with any other accessories or equipment that require VDC connections to the "G", "W1", or "Y1" terminals (i.e. Boilerless System Kit).

The multiple unit control board provides the components necessary to protect the Mark IV/AC board from electrical damage that may occur when using standard off-the-shelf relays.

Do not use the unoccupied (U-terminal) feature with the multiple unit control board.

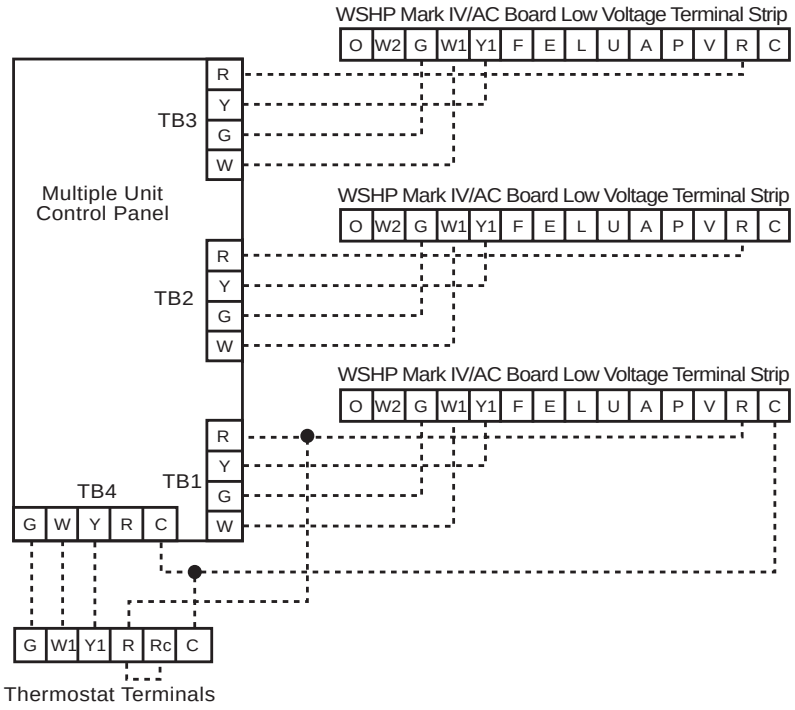

Up to 2 Units (Part No. 106059801)

The multiple unit control board is an accessory used when you need to control up to 2-units from a single thermostat. The board is typically mounted in the unit control box closest to the thermostat. The "G", "W", "Y", "C", and "L" connections are short flying leads pre-attached to the board. A maximum of 3 boards may be used together if up to 4-units must be connected and controlled from a single thermostat.

This version of the board uses VDC relays and should not be used in combination with any other accessories or equipment that require VAC Connections to the "G", "W1" or "Y1" terminals (i.e. Boilerless System Kit). Do not use the unoccupied (U-terminal) feature with the multiple unit control board.

The multiple unit control board provides the components necessary to protect the Mark IV/AC board from electrical damage that may occur when using standard off-the-shelf relays.

The multiple unit control feature is for remote wall thermostat operation.

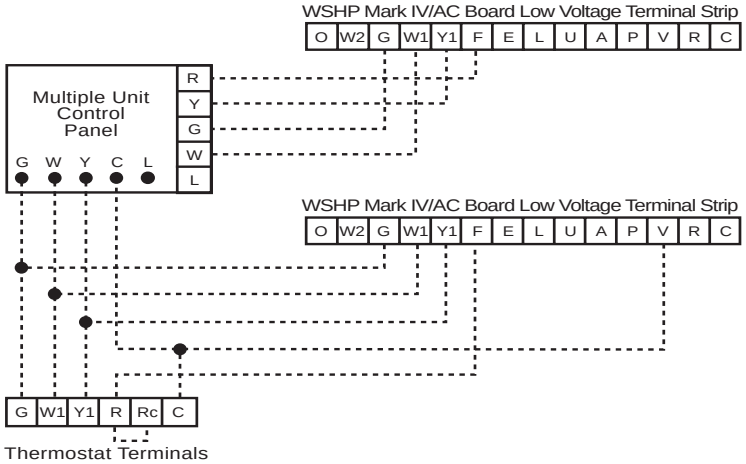

Downloaded from www.Manualslib.com manuals search engine

MicroTech Network Control System

Each Console Heat Pump Unit is available with a MicroTech Unit Controller. The unit controller is a factory mounted, preprogrammed and pre-tested stand-alone microprocessor capable of communicating to a local personal computer through the MicroTech Network Master Panel.

The MicroTech control system includes unit-mounted return air; discharge air and leaving water temperature sensors; tenant setpoint adjustment knob and an optional tenant override button; and the capability of replacing the return air sensor with a wall-mounted room sensor.

The MicroTech Network Control System is a fully distributed, direct digital control (DDC) system which allows the owner to control and monitor water source heat pump units and auxiliary equipment through a personal computer to maintain comfort conditions.

The PC has the ability to communicate with each heat pump unit and with the entire system through two dedicated conductors, twisted and shielded, in a "daisy chained" format. Each controller utilizes EEPROM microprocessor technology, retaining programmable setpoint parameters and control logic. Each controller may operate as stand-alone, independent of the network communications and will:

- Control heating and cooling from a return air sensor.
- Provide fan and compressor operation.
- Monitor all safety controls.
- Monitor discharge air temperature.
- Monitor leaving water temperature.
- Provide status of all vital unit functions.
- Provide optional control output.

The MS-DOS compatible software package allows the operator to interface with each unit controller into the entire network. Parameters within each controller are factory set but can be changed from the PC. All control sequencing, stop/start and safety monitoring is displayed on the PC screen with the following unique values and parameters for each unit:

- Return air, discharge air and entering water temperatures.
- Compressor, fan and reversing valve status.
- High pressure, low temperature, brownout and drain pan status.
- Occupied and unoccupied heat and cool setpoints.
- Auto/manual and occupied/unoccupied fan control.
- Mode, fault, system, schedule and setpoint operation.
- Compressor starts and fan run hours.
- Load shed level and tenant override.

In addition, the following unique operation and maintenance parameters can be displayed for each unit:

- Leaving water temperature
- Return air temperature setpoint adjustment
- Adaptive optimal start
- Occupied/unoccupied (on/cycle) fan mode
- Room temperature warning
- Filter changes from fan hours
- Compressor management: On/off differential, maximum off time, maximum cycle

Time schedules can be graphically displayed showing start/stop times for each day of the week and holidays. Up to 16 holiday dates and duration cycles can be set for a total of 240 possible holiday dates. Each heat pump can be assigned to a different time schedule and any number of heat pumps can be assigned to the same time schedule.

Group summary screens are available to display various parameters for 12 units. Screens are grouped to cover major groups such as temperatures, setpoints and status.

Control and monitoring of the entire water source heat pump system through the MicroTech Network includes the MicroTech Loop Water Controller and Application Specific Controllers complete with graphic displays.

Wall-mounted room sensors are available to control the heating and cooling operation of each MicroTech Unit Controller. These include a basic room sensor with optimal override, LED status and tenant setpoint adjustment.

For remote access, a Modem Access Unit allows a remote PC to call the MicroTech Network through phone lines as well as allowing the MicroTech Network to dial predefined phone numbers.

Network graphic

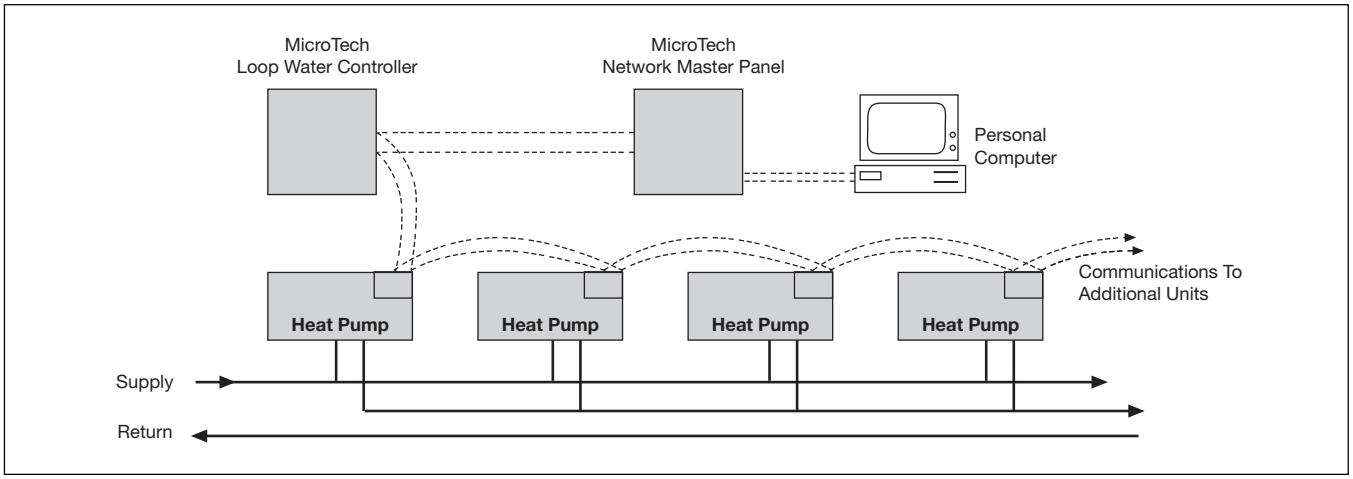

Downloaded from www.Manualslib.com manuals search engine

Field Installed Options on MicroTech™ 2000 Units

MicroTech 2000 units can provide up to 4-outputs, that can be configured for any of the following output control signals:

1) Scheduled Output
   When using a Network Master Panel (NMP) these outputs can be assigned to one of 32 available schedules. The output will energize when the assigned schedule is occupied and de-energize when in unoccupied. These outputs could be used to control lights, etc.
2) Auxiliary Heat (Skin Heat)
   When using a Loop Water Controller (LWC) the MicroTech 2000 receives loop water temperature information from the LWC and will use the Auxiliary Heat output for heating when loop water temperature is inappropriate for heat pump heating. These outputs provide a signal that can be used to control a remote electric heater. The output will energize on a call for electric heat and de-energize when not required.
3) Fresh Air Damper
   These outputs provide a signal that can be used to control a remote fresh air damper. The output will energize when the unit fan is energized and de-energize when the unit fan is de-energized.
4) Motorized Water Valve
   These outputs provide control for a motorized water valve that can be used to stop or divert flow away from the WSHP when compressor operation is not needed. The output will be energized when compressor operation is required.

If more than one of the above control signals is required on a single WSHP, the MicroTech 2000 Auxiliary Module Kit (107239001) must be used and these additional output control signals will be connected to the Auxiliary board. The Auxiliary board is provided in all 2-circuit units. 1-circuit units can provide up to 4-outputs while 2-circuit units only have 3-outputs available. The 4th control signal output shown in the diagrams below is not available on 2-circuit units.

If the Auxiliary board is added in the field to provide additional outputs it will need to be mounted within the WSHP control box so that J1 on the Auxiliary board can be connected to J6 on the MicroTech 2000 board without exceeding a maximum wire length of 10".

Also, each output is by default configured to “none” and must be field set to one of the four signal types listed above using the Monitor software, cable, and a PC communicating to the unit through an MCG panel.

1st Control Signal Output

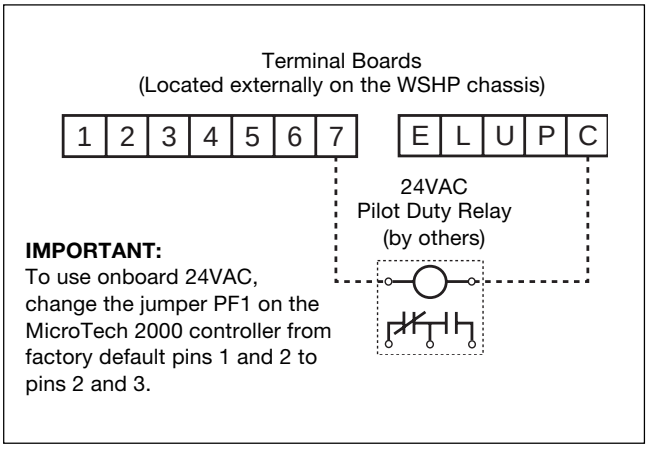

2nd Control Signal Output

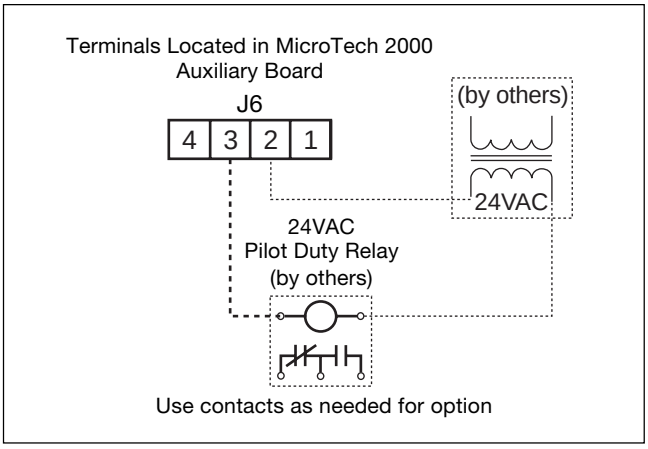

3rd Control Signal Output

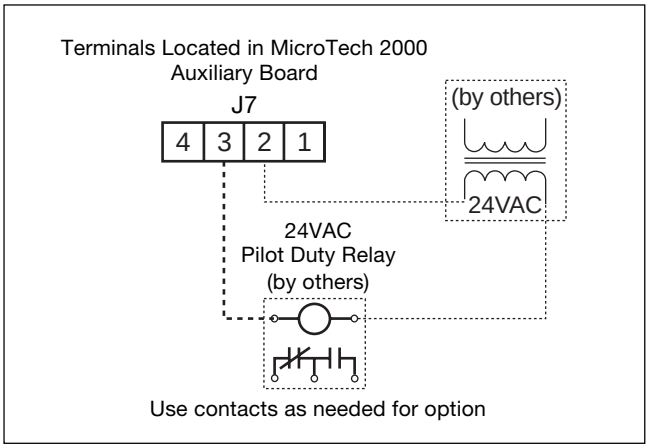

4th Control Signal Output

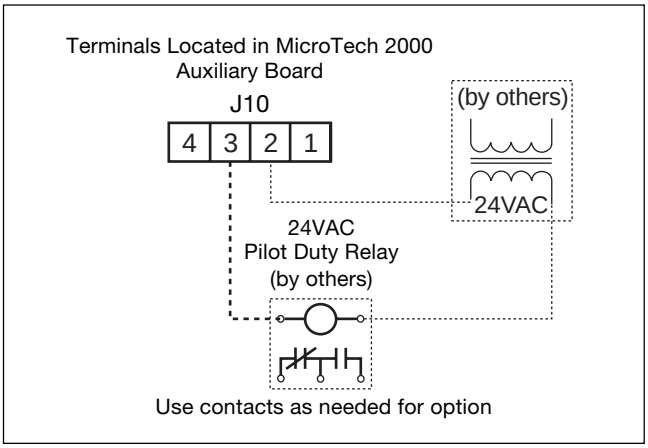

Downloaded from www.Manualslib.com manuals search engine

60 Hertz

Legend Symbol	Description	Setpoint
CAP	Capacitor	
CRD	Cordset (OPT)	
CS	Condensate Sensor	
HP	Switch - High Pressure	
HTR	Heater - Electric	
M	Motor - Fan	
M1	Motor - Compressor	
PCS	Controller - MicroTech	
PO11	Potentiometer - Tenant Set Point	
R1	Relay Compressor	
R4	Relay - Fan	
R12	Relay - Electric Heat	
RES2	Resistor - Tenant Set Point	
RV	Reversing Valve	
S1	Sensor - Return Air	
S2	Sensor - Discharge Air	
S5	Sensor - Water Out	
SW1	Switch - Start/Stop	
SW2	Switch - Hi/Low Fan Speed	
SW3	Switch - Tenant Override	
T4	Thermostat - Low Limit	38° F
TB1	Terminal Block - Communications	
TB2	Terminal Block - Remote Signal	
TB3	Terminal Block - Line Voltage	
TB4	Terminal Block - Low Voltage	
X1	Transformer	
	Transorb	
>>	Plug Connection	
TB	Terminal Block	
ACO	Automatic Change Over	
MCO	Manual Change Over	
BR	Boilerless Relay	
HR	Heater Relay	
	Shielded Cable	
	Optional Wiring	

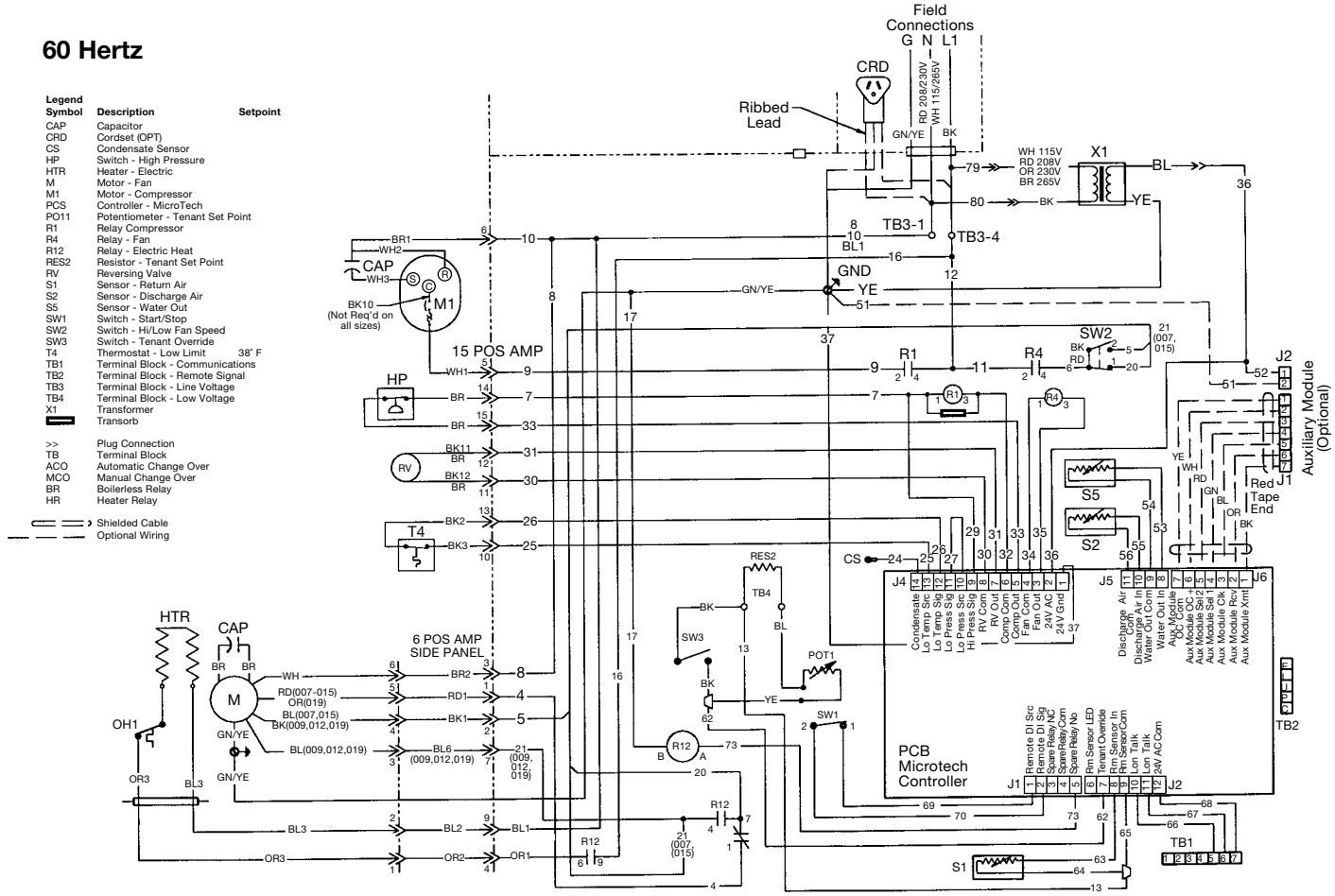

50 Hertz

Legend Symbol	Description	Setpoint
CAP	Capacitor	
CRD	Cordset (OPT)	
CS	Condensate Sensor	
HP	Switch - High Pressure	
HTR	Heater - Electric	
M	Motor - Fan	
M1	Motor - Compressor	
PCS	Controller - MicroTech	
PO11	Potentiometer - Tenant Set Point	
R1	Relay Compressor	
R4	Relay - Fan	
R12	Relay - Electric Heat	
RES2	Resistor - Tenant Set Point	
RV	Reversing Valve	
S1	Sensor - Return Air	
S2	Sensor - Discharge Air	
S5	Sensor - Water Out	
SW1	Switch - Start/Stop	
SW2	Switch - Hi/Low Fan Speed	
SW3	Switch - Tennant Override	
T4	Thermostat - Low Limit	38° F
TB1	Terminal Block - Communications	
TB2	Terminal Block - Remote Signal	
TB3	Terminal Block - Line Voltage	
TB4	Terminal Block - Low Voltage	
X1	Transformer	
	Transorb	
>>	Plug Connection	
TB	Terminal Block	
ACO	Automatic Change Over	
MCO	Manual Change Over	
BR	Boilerless Relay	
HR	Heater Relay	
	Shielded Cable	
	Optional Wiring	

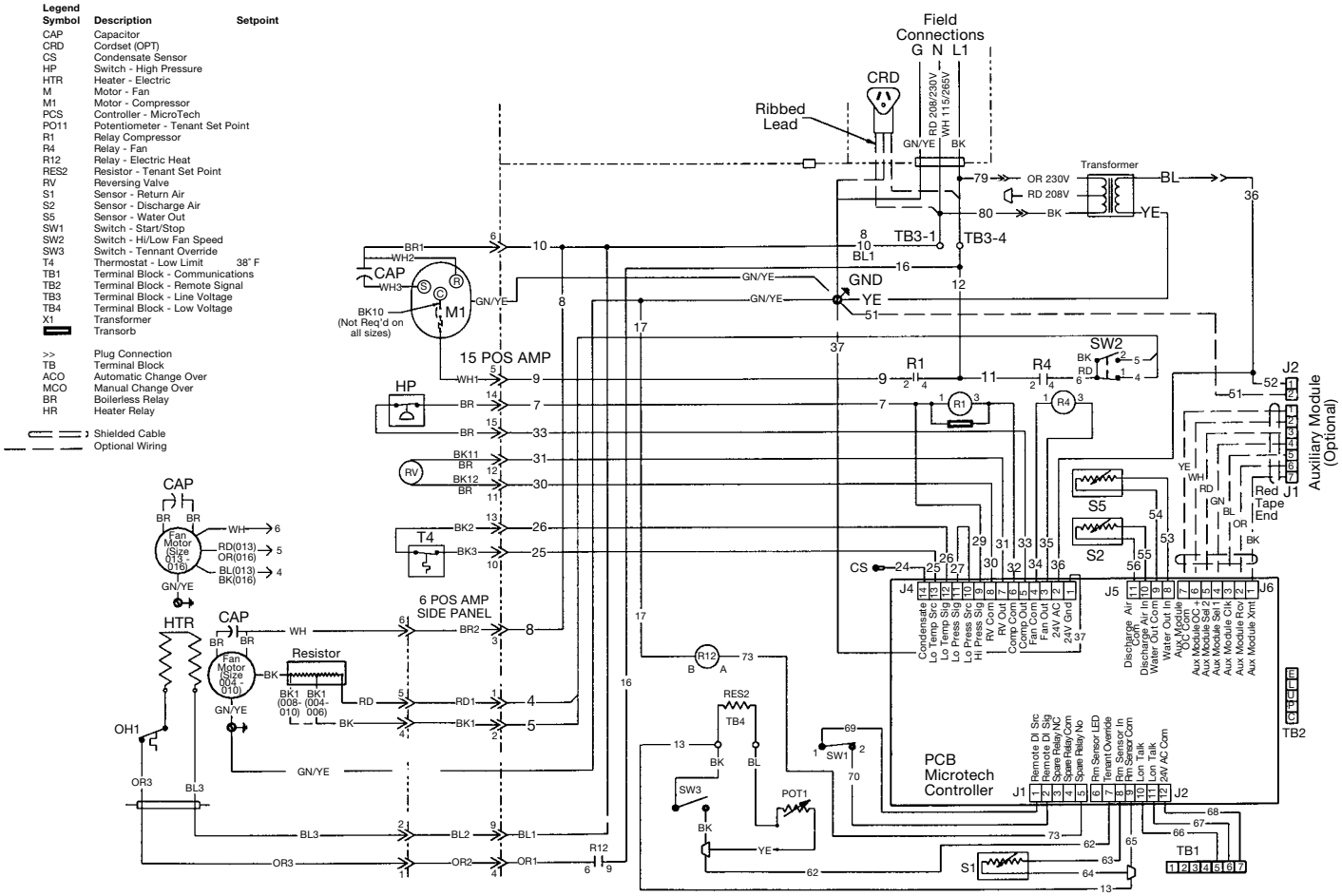

Downloaded from www.Manualslib.com manuals search engine

Field Installed Optional Outside Air Damper

Unit Size	A	B	C	C[1]	D	E
004 - 012	46 (1168)	45 (1143)	21.09 (536)	11.38 (289)	12.53 (318)	2.25 (57)
013 - 019	54 (1372)	53 (1346)	22.25 (565)	22.25 (565)	12.53 (318)	2.25 (57)

Caution:

1. To prevent infiltration of ambient conditions, it is the responsibility of the contractor to assure that factory installed gasketing matches up with the wall opening, or that additional material is used to assure a positive seal.
2. **Cold Weather Operation:** Console water source heat pumps may experience erratic operation during cold ambient conditions with the outside air damper in the open position. See "Operating Limits," page 8, for guidelines.
3. **Note:** Illustrations not to scale

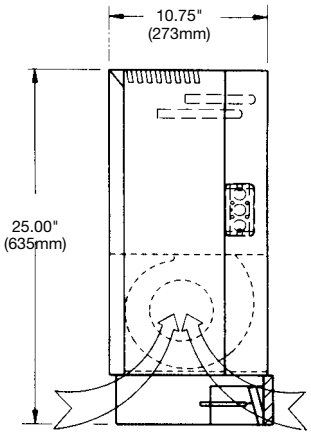

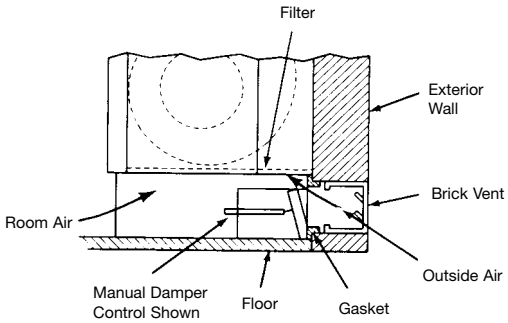

Rear Inlet
Typical Installation

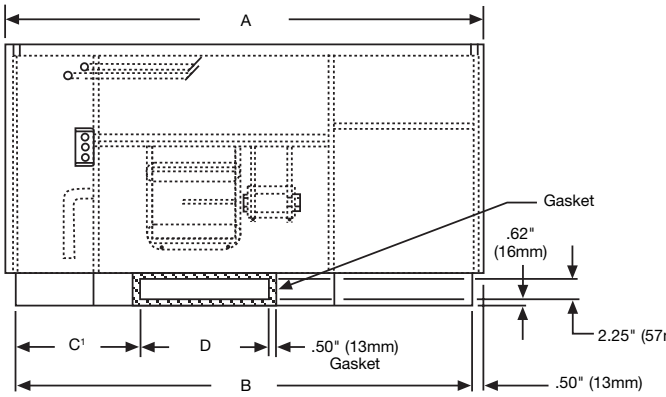

Front View - Left Hand Piping
Back Panel With Outside Air Damper Inlet

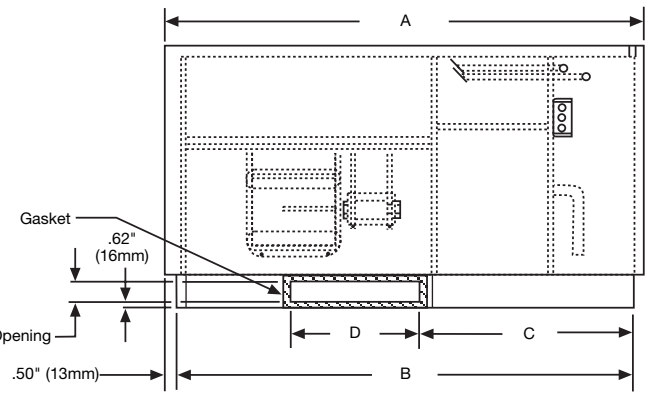

Front View - Right Hand Piping
Back Panel With Outside Air Damper Inlet

Troubleshooting

Should a major problem develop, refer to the following information for possible cause and corrective steps.

Neither fan nor compressor runs:

1. The fuse may be blown or the circuit breaker is open. Check electrical circuits and motor windings for shorts or grounds. Investigate for possible overloading. Replace fuse or reset circuit breakers after fault is corrected.
2. Wires may be loose or broken. Replace or tighten.
3. Supply voltage may be too low. Check it with the power company.
4. Control system may be faulty. Check thermostat for correct wiring and check 24 volt transformer for burnout.

Fan operates but compressor does not:

1. Check capacitor.
2. Wires may be loose or broken. Replace or tighten.
3. The high pressure may have tripped due to:
   a. Fouled or plugged condenser.
   b. Lack of or no condenser water.
   c. Too warm condenser water.
   d. Not enough airflow over the coil due to dirty filters.
   e. Coil or fan motor failure.
4. The low temperature switch may have tripped due to:
   a. Fouled or plugged condenser.
   b. Lack of or no condenser water.
   c. Too cold condenser water.
   d. Not enough airflow over the coil due to dirty filters.
   e. Coil or fan motor failure.
5. Check thermostat setting, calibration and wiring.
6. The compressor overload protection is open. If the compressor dome is extremely hot, the overload will not reset until cooled down. If the overload is external, replace it. If the overload is internal, replace the compressor.
7. The internal winding of the compressor motor may be grounded to the compressor shell. If so, replace the compressor.
8. The compressor winding may be open. Check continuity with ohmmeter. If the winding is open, replace the compressor.

Downloaded from www.Manualslib.com manuals search engine

Compressor attempts to start but doesn't:

1. Check capacitor.
2. Check for defective compressor by making resistance check on winding.
3. Check run capacitor.

Compressor runs in short cycle:

1. Check thermostat mounting and location.
2. Check all relays, relaying and contacts.
3. Check run capacitor.
4. Check high pressure switch.
5. Check low temperature switch.
6. See if reversing valve has not fully shifted to either side.

Insufficient cooling or heating:

1. Check thermostat for improper location.
2. Airflow may be insufficient. Check and clean the filter.
3. The reversing valve may be defective, creating a bypass of refrigerant. If the unit will not heat, check the reversing valve coil.
4. Check capillary tubes for possible restriction of refrigerant flow.
5. Check for restriction in water flow.

Insufficient water flow through condenser:

1. Check to see that valves are open all the way.
2. Check for air in lines.
3. Check circulating pump.

Water drips from conditioner:

1. Check for plugged condensate drain.
2. Check for dirty filter.
3. Check to see if condensate drain runs uphill.
4. See if blower motor is up to speed.
5. Check for loose or mispositioned blower.
6. Are drains properly trapped?

Noisy unit operation:

1. Check for fan wheel hitting the housing. Adjust for clearance.
2. Check for bent fan wheel. Replace if damaged.
3. Check for loose fan wheel on shaft. Tighten.
4. Make sure compressor is floating free on its isolator mounts.
5. Check for tubing touching compressor or other surface. Readjust tubing by bending slightly.
6. Check screws on all panels. Tighten.
7. Check for chattering or humming in the contactor relays due to low voltage or a defective holding coil. Replace component.
8. Check water balance to unit for proper water flow rate.

Maintenance

1. Filter changes are required at the regular intervals. The time period between changes will depend upon the project requirements. Some applications such as motels, produce a lot of lint from carpeting and linen changes, and will require more frequent filter changes. It is suggested that the filter be checked at 60 day intervals for the first year until experience is acquired. If light cannot be seen through the filter when held up to sunlight or a bright light, it should be changed. A more critical standard may be desirable.
2. The condensate drain pan should be checked annually and cleaned and flushed as required. **Note:** Mark IV/AC equipment has a condensate overflow control device. In cooling, if compressor will not operate, it may be due to unit compressor lockout on condensate overflow.
3. Recording of performance measurement of volt amps and water temperature differences (both heating and cooling) is recommended. A comparison of logged data with start-up and other annual data is useful as an indicator of general equipment condition.
4. Periodic lockouts almost always are caused by air or water problems. The lockout (shutdown) of the conditioner is a normal protective result. Check for dirt in the water system, water flow rates, water temperature, airflow rates (may be dirty filter), and air temperatures. If the lockout occurs in the morning following a return from night setback, entering air below machine limits may be the cause.
5. When checking unit operation, it is important to gather the correct information.
   a. Take voltage reading.
   b. Amp reading in both cooling and heating mode operation.
   c. Water temperature difference in both cooling and heating mode.
   d. Air temperature difference in both cooling and heating mode. Air termperature difference in cooling mode should include both wet and dry bulb temperatures.
6. Also record model, catalog, and serial numbers.

Downloaded from www.Manualslib.com manuals search engine

Warranty

All McQuay equipment is sold pursuant to its standard terms and conditions of sale, including Limited Product Warranty. Consult your local McQuay Representative for warranty details. Refer to Form 933-43285Y. To find your local McQuay Representative, go to www.mcquay.com.

This document contains the most current product information as of this printing. For the most up-to-date product information, please go to **www.mcquay.com.**

Products Manufactured in an ISO Certified Facility.

©2006 McQuay International • www.mcquay.com • 800-432-1342

IM 447-9 (6/06)

Downloaded from www.Manualslib.com manuals search engine