Replacement Parts List No. 700018300
Rev. C 10/2013

Enfinity™ Ceiling Mounted Water Source Heat Pump

WCCH, WCCW
Sizes 009, 015, 019, 024

50HZ, R-410A
Design 4

DAIKIN McQUAY®

To find your Daikin Applied parts distributor, call 1-800-377-2787 or visit www.DaikinApplied.com

Contents

Parts List Revision History 3

Nomenclature
- Serial Number 4
- Model Number 4

Electrical Legend 5

Basic Unit Layout 6

Cabinet
- Drain Pan, Condensate Hose, Filter, Compressor Damper & Vibration Insulation, Hanger Bracket, Cabinet Gaskets & Access Panels 7

Blower Assembly
- Motor, Capacitor, Wheel, Housing 8

Refrigeration Circuit
- Reversing Valve & Solenoid, Compressor, Condenser, Evaporator, Fusible Plug, High Pressure Switch, Low Pressure Switch (024), Coremax Valves
  - Diagrams 9
  - Components 10

Control Box
- Microtech III Controller, DDC Less Board
  - Diagrams 11
  - Components 12

Field Installed Accessories 13, 14

Critical Parts List CPL1

Parts List Revision History

Revision	Date	Description
New	8/10	New
A	9/12	Title Page- Change title to Enfinity™ Horizontal WSHP. Rebrand logo. Page 5- Add Electrical Legend. Pages 5-6 moved to page 13-14, Multiple changes made to Field Installed Accessories. CPL1- Add Critical Parts List.
B	9/12	Title Page- Change title to Enfinity™ Ceiling Mounted WSHP. CPL1- Change title to Enfinity™ Ceiling Mounted WSHP.
C	10/13	Rebrand Daikin. Page 8- Change ECM p/n 106801703 to 668966021 (015), 668966022(019) & 668966023(024). Page 10- Update Reversing Valve and Solenoid. Page 12- Change MTIII I/O Exp p/n 668105701 to 668105702. Change MTIII LonWorks p/n 668105801 to 107293070 and BACnet p/n 668105901 to 107293071. CPL1- Change MTIII I/O Exp, MTIII LonWorks & BACnet. Change ECM, rev. valve & solenoid.

Daikin Applied, 13600 Industrial Park Blvd., P.O. Box 1551, Minneapolis, MN 55440 (763) 553-5330

Nomenclature

Serial Number

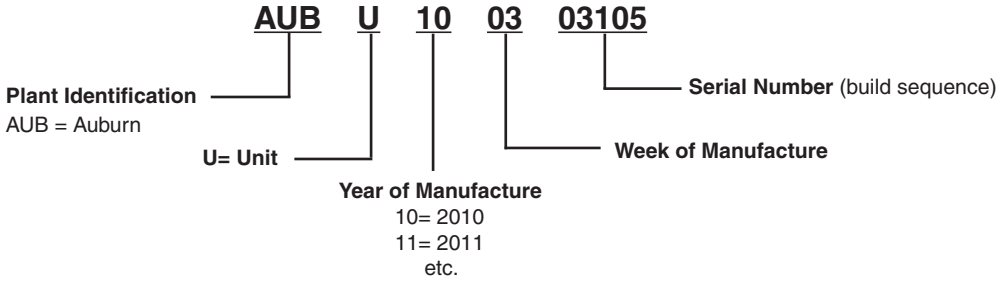

Model Number

	W	CCH	4	019	B	M	Y	L	E	01	YY	A	C	Y	YY	Y	YYY	YYY	YYY	A	Y	YYY	Y	Y	Y	E	1	C	1
Code	01	02	03	04	05	06	07	08	09	10	11	12	13	14	15	16	17	18	19	20	21	22	23	24	25	26	27	28	29

Code 01= Unit Type
W= Water Source Heat Pump

Code 02= Product Identifier
CCH= R410a, Ceiling Mounted, Standard Range
CCW= R410a, Ceiling Mounted, Geothermal Range

Code 03= Design Series
4= Design 4

Code 04= Unit Size
009= 9000 BtuH Nominal Cooling
015= 15000 BtuH Nominal Cooling
019= 19000 BtuH Nominal Cooling
024= 24000 BtuH Nominal Cooling

Code 05= Controls
B= MicroTech III Base Controller
C= MicroTech III Controller with Lon
D= Microtech III Controller with BACnet
E= DDC Less Board

Code 06= Voltage
M= 230/50/1

Code 07= Cabinet Height
Y= None

Code 08= Return Air
L= Left Hand Return Air
R= Right Hand Return Air

Code 09= Discharge Air
E= End Discharge
S= Straight Discharge

Code 10= Blower Motor
01= Standard
03= Low Static
04= ECM

Code 11= Discharge Grille/ Cabinet Type
YY= None

Code 12= Construction Type
A= Standard
B= Standard w/2" Filter Rack
E= Indoor Air Quality (IAQ)
F= IAQ w/2" Filter Rack

Code 13= Water to Refrigerant Heat Exchanger
C= Copper Inner Tube/ Steel Outer Tube
S= Cupro Nickel Inner Tube/ Steel Outer Tube
Y= None

Code 14= Heating Options
Y= None

Code 15= Dehumidification
YY= None

Code 16= Piping Hand
Y= None

Code 17= Thermostat Control
YYY= None

Codes 18= Night Control
YYY= None

Code 19= Desuperheater
YYY= None

Code 20= Refrigerant
A= R410a

Code 21= Power Connection
Y= None

Code 22= Cabinet Electrical
YYY= None

Code 23= Water Flow Control
Y= None

Code 24= Always Y

Code 25= Outside Air
Y= None

Code 26= Agency Type
E= ETL, CETL, CE

Code 27= Packaging
Code 28= Warranty
Code 29= Always 1 (Product Style 1)

Electrical Legend

C1 ..... Capacitor, Compressor
C2 ..... Capacitor, Fan
CM ..... Compressor Motor
COS ..... Condensate Overflow Sensor
DAT ..... Discharge Air Temp. Sensor
HP ..... High Pressure Switch
ISO-NC ..... Isolation Valve , Normally Closed
ISO-NO ..... Isolation Valve , Normally Open
LED1 ..... LED/Annunciator
LWT ..... Leaving Water Temp Sensor
MIII ..... MicroTech III Main Board
RAT ..... Return Air Temp Sensor
RV ..... Reversing Valve Solenoid
SLTS ..... Suction Line Temp Sensor
X1 ..... Primary 24VAC Transformer

Basic Unit Layout

Cooling Refrigeration Cycle

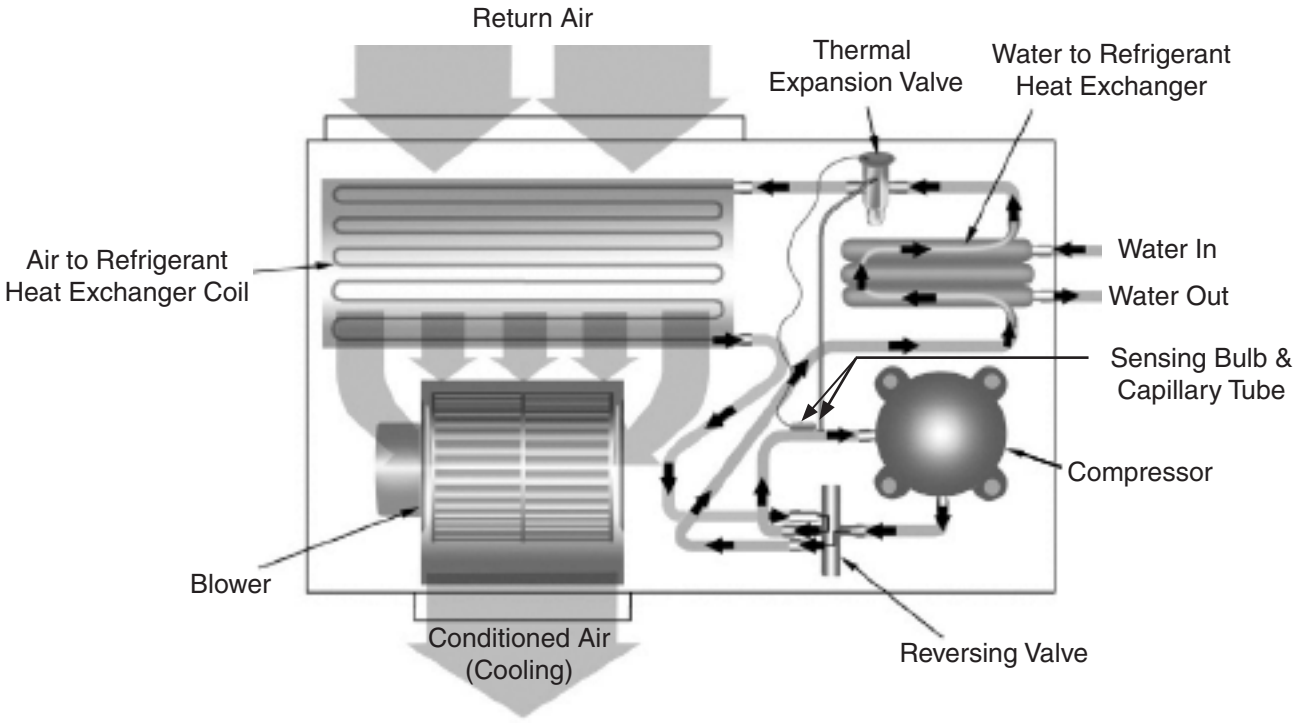

Heating (Reverse Refrigeration) Cycle

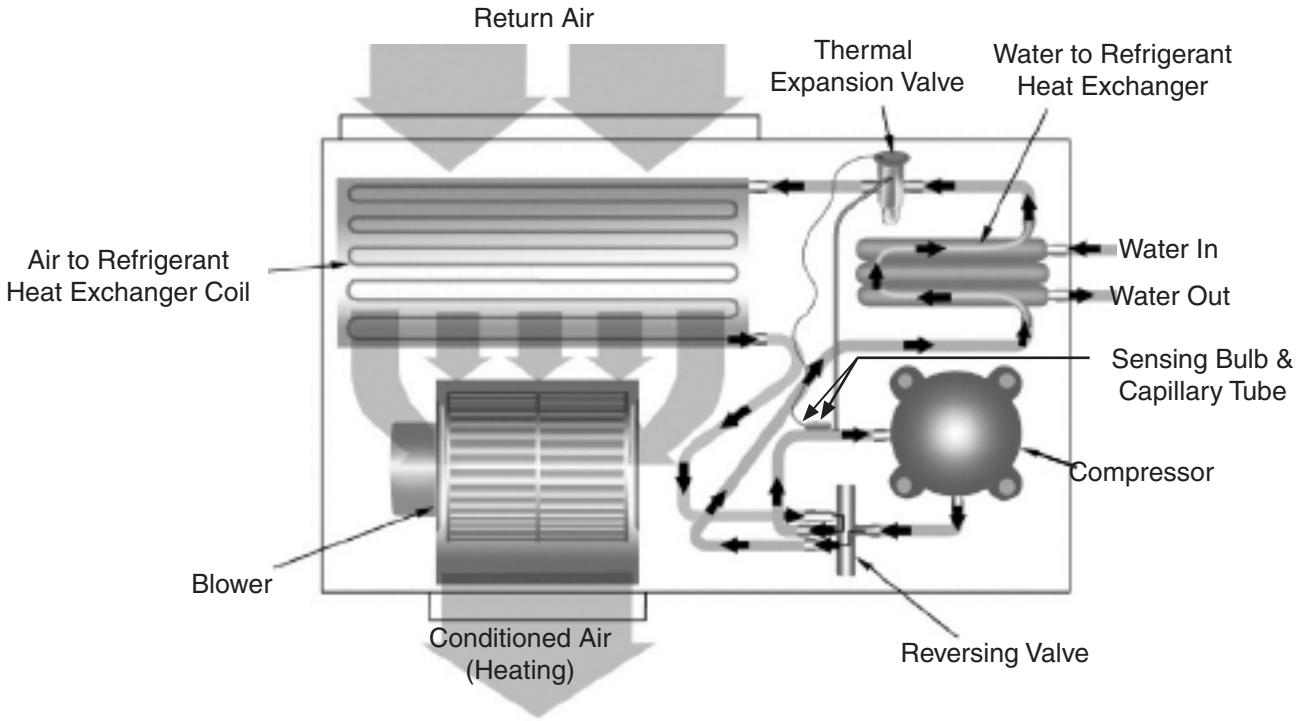

Cabinet

Drain Pan, Condensate Hose, Filter, Compressor Damper & Vibration Insulation, Hanger Bracket, Cabinet Gaskets & Access Panels

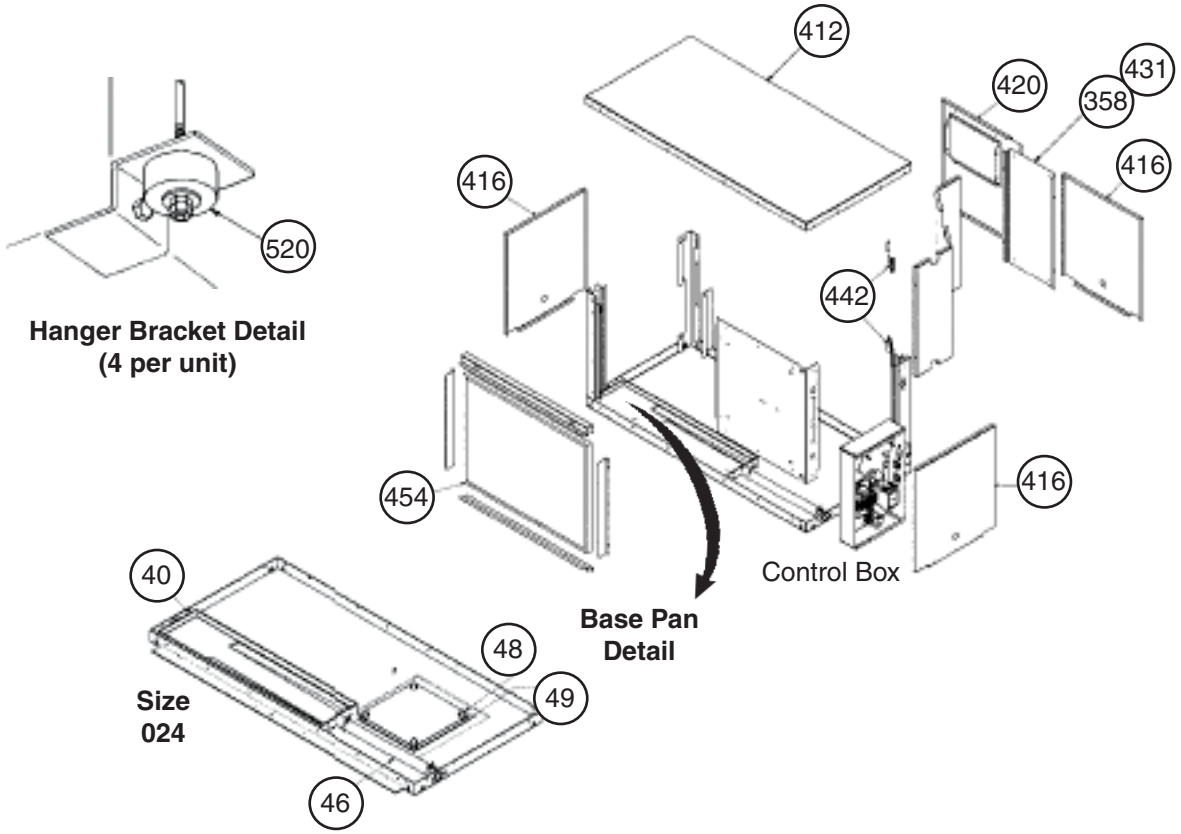

Ref. No.	Part Description	Part Number	Unit Size 009	015	019	024
40	Drain Pan	106417301	1			
	Drain Pan	106417401		1	1	1
	Terminal, Ring- Condensate Overflow Wire [2]	802007936	1	1	1	1
46	Hose- Condensate	668077601	1			
	Hose- Condensate	668077602		1	1	1
48	Plate- Damper	060996911		1	1	1
49	Insulation- Vibration	060997021		1	1	1
358	Flange- Duct 9 x 11	061001101		2	2	2
412	Cover- Top	106416502	1			
	Cover- Top	106416612		1	1	1
416	Panel- Access	106418601	2			
	Panel- Access	106418701		3	3	3
N/S	Panel- Access	106489901	1			
420	Panel- Blower	106472701	1			
	Panel- Blower	106484301		1	1	1
431	Panel- Rear	106417702	1			
	Panel- Rear	106417812		1	1	1
442	Gasket- Edging	107847202	1			
	Gasket- Edging	107847203		2	2	2
454	Filter 20 x 10 x 1	106535004	1			
	Filter 24 x 18 x 1	106535005		1	1	1
520	Kit- Unit Hanger [1]	060676303	1	1	1	1

N/S= Not shown on diagram.
[1] Kit includes four (4) brackets (p/n 060609202), four (4) grommets (p/n 802003334), and hardware.
[2] Attaches using a stand off p/n 802028115.

Blower Assembly
Motor, Capacitor, Wheel, Housing

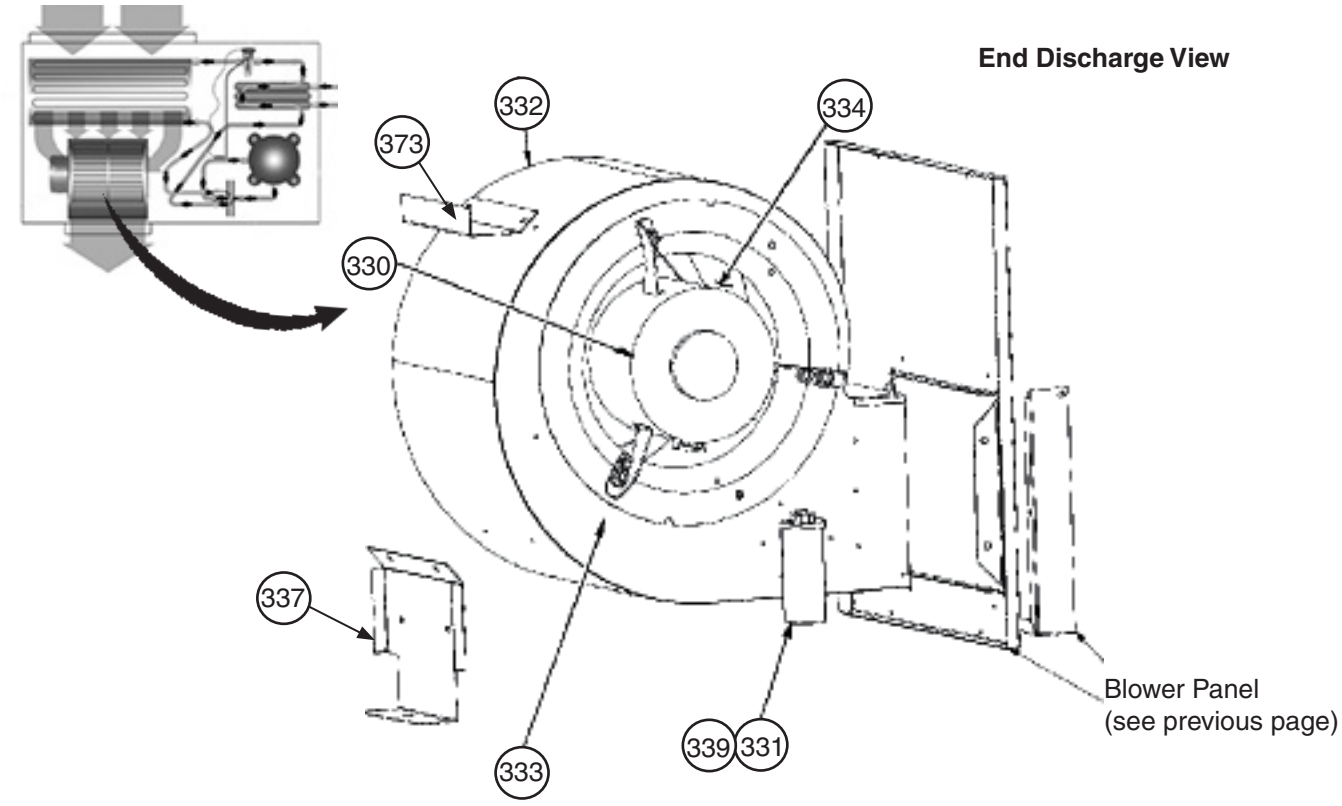

Ref No.	Part Description	Specification	Part Number	Unit Size 009	015	019	024
330	Standard Motor	(Code 10= 01)					
	Motor, 1/8 HP		106646503	1			
	Motor, 1/3 HP		060961802		1	1	1
330	ECM & Program, 1/3 HP	until 2/13	106801703		1	1	1
	ECM & Program, 1/3 HP	2/13 & later	669678921		1		
	ECM & Program, 1/3 HP	2/13 & later	669678922			1	
	ECM & Program, 1/3 HP	2/13 & later	669678923				1
N/S	Connector, Receptacle		4EGA9160		1	1	1
N/S	Plug, Housing		4EFA9387		1	1	1
331	Capacitor- Blower Motor	3.0 MFD 440V	037516401	1			
	Capacitor- Blower Motor	7.5 MFD 370V	037516404		1	1	1
332	Housing- Blower		060699606	1			
	Housing- Blower		060699604		1	1	1
333	Inlet Ring		060629101	1			
	Inlet Ring		060828801		1	1	1
334	Wheel- Blower		060627401	1			
	Wheel- Blower		802000037		1	1	1
337	Bracket- Blower Support		061024301		1	1	1
339	Bracket- Capacitor		850010570	1	1	1	1
373	Bracket- Blower Housing Support		060615301	1	1	1	1

Refrigeration Circuit

Reversing Valve & Solenoid, Compressor, Condenser, Evaporator, Fusible Plug, High Pressure Switch, Low Pressure Switch, Coremax Valves Diagrams

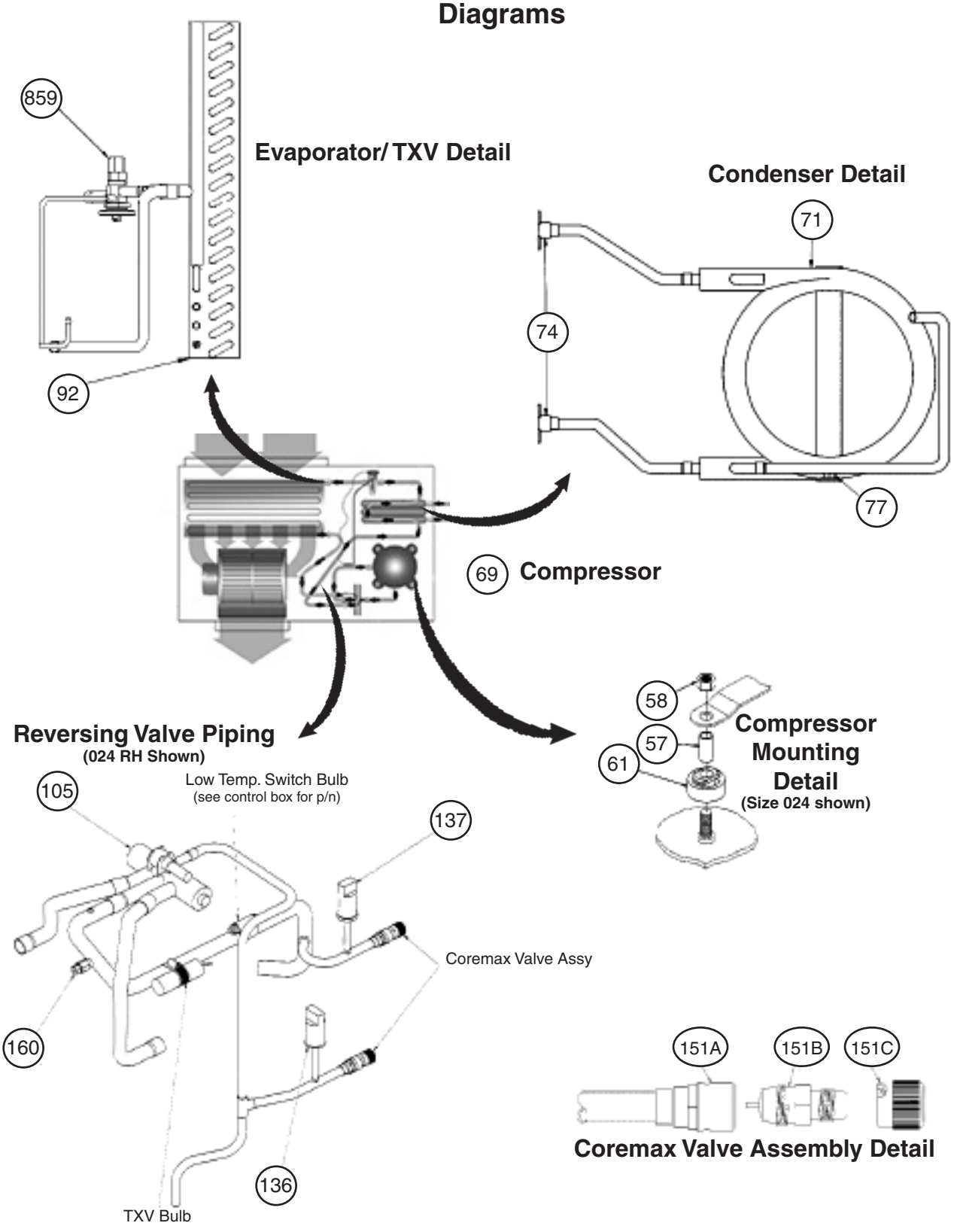

Refrigeration Circuit

Reversing Valve & Solenoid, Compressor, Condenser, Evaporator, Fusible Plug, High Pressure Switch, Low Pressure Switch, Coremax Valves Components

Ref No.	Part Description	Specification	Part Number	Unit Size 009	015	019	024
57	Sleeve- Compressor Mount		060623401	4	4	4	4
58	Nut- Compressor Mount		802012035	4	4	4	4
61	Grommet- Compressor Mount		060623301	4			
	Grommet- Compressor Mount		668057101		4	4	4
69	Compressor		910104555	1			
	Compressor		668951602		1		
	Compressor		669639903			1	
	Compressor		669639803				1
71	Condenser	Copper Inner Tube (C13= C)	106486001	1			
	Condenser	Copper Inner Tube (C13= C)	667718301		1	1	1
	Condenser	CUNI Inner Tube (C13= S)	106486002	1			
	Condenser	CUNI Inner Tube (C13= S)	667718302		1	1	1
74	Adapter	.500 x .625 ODS	106474901	2	2	2	2
77	Flange Nut- Hex		802012035	1	1	1	1
92	Evaporator Coil		668198801	1			
	Evaporator Coil		106926001		1	1	1
105	Reversing Valve	until 3/11	106694110	1			
	Reversing Valve	3/11& later	910110425	1			
	Reversing Valve	until 3/11	106694112		1	1	1
	Reversing Valve	3/11& later	910110427		1	1	1
N/S	Solenoid, Reversing Valve	until 3/11	106694207	1	1	1	1
	Solenoid, Reversing Valve	3/11& later	910110439	1	1	1	1
136	Control- High Pressure	500 ± 10PSI	106483301	1	1	1	1
137	Control- Low Pressure	22 ± 7PSI/7 ± 3PSI	107225101		1	1	1
151A	Seat- Fitting	.375	668188801	2	2	2	2
151B	Core- Valve		668188701	2	2	2	2
151C	Cap- Valve		668189501	2	2	2	2
160	Fusible Plug Assy		850008345	1	1	1	1
	Plug Only	283° F	106057401	1	1	1	1
859	Valve- Expansion		668182701	1			
	Valve- Expansion		106489101		1		
	Valve- Expansion		106489109			1	
	Valve- Expansion		106489110				1

Control Box

MicroTech III Base Controller: Code 05= B
MicroTech III Controller with Lon: Code 05= C
MicroTech III Controller with BACnet: Code 05= D
DDC Less Board: Code 05= E
Diagrams

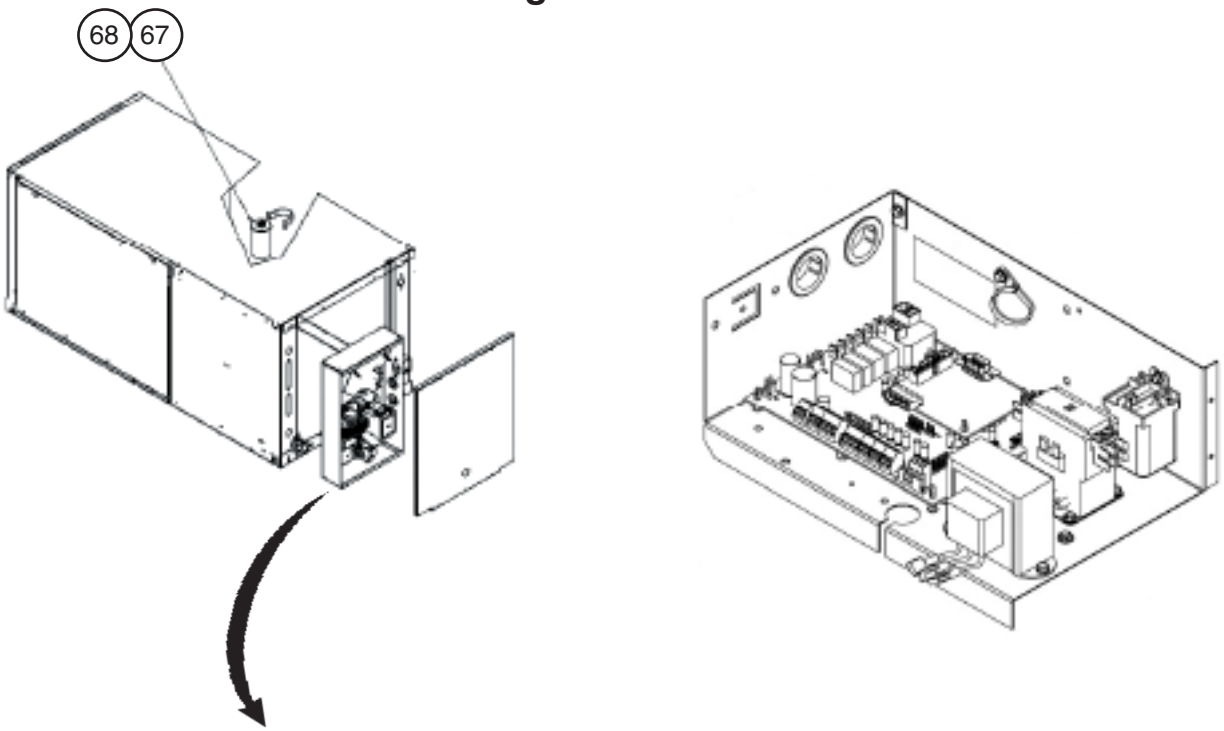

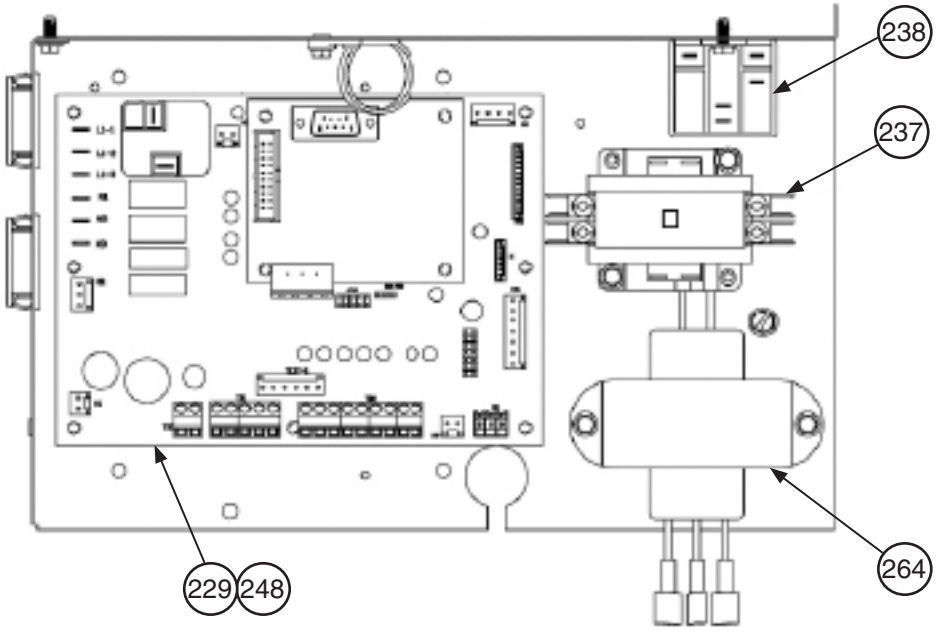

Control Box

MicroTech III Base Controller: Code 05= B
MicroTech III Controller with Lon: Code 05= C
MicroTech III Controller with BACnet: Code 05= D
DDC Less Board: Code 05= E
Components

Ref No.	Part Description	Specification	Part Number	Unit Size 009	015	019	024
67	Bracket- Capacitor		060675204	1			
	Bracket- Capacitor		060675201		1	1	1
68	Capacitor- Compressor	15MFD/370V	067291507	1			
	Capacitor- Compressor	35MFD/370V	067291516		1	1	1
229	PC Board- Main Controller						
	Control Board, MicroTech III	Code 05= B,C,D	668105601	1	1	1	1
N/S	LonWorks Comm. Card	(CN_LON1 Add-On) Code 05= C	107293070**	1	1	1	1
N/S	BACnet Comm. Card	(CN_LON1 Add-On) Code 05= D	107293071**	1	1	1	1
N/S	I/O Expansion Board Assy	(H5 Add-On)	668105702*	1	1	1	1
N/S	LED Annunciator Assy	(MT3 & I/O Boards)	668395201	1	1	1	1
N/S	H1 Connector, 2-Pin	(24V Power)	4EGA9159	1	1	1	1
N/S	H2 Connector, 2-Pin/1-Blank	(Fan Output)	4EGA9160	1	1	1	1
N/S	H3 Connector, 2-Pin	(Hi Pressure Switch)	4EGA9159	1	1	1	1
N/S	H4 Connector, 4-Pin	(Dis Air/Leaving H_2O Temp Sensor)	4EGA9161	1	1	1	1
N/S	H6 Connector, 7-Pin	(Condensate OF/Low P/Low T/Rev Vlv)	4EGA9164	1	1	1	1
N/S	H8 Connector, 3-Pin	(Motorized & Isolation Vlvs/Pump Relay)	4EGA9160	1	1	1	1
N/S	H9 Connector, 2-Pin	(RA Temp Sensor)	4EGA9159	1	1	1	1
237	Contactor- Compressor	24V 2PDT	073300101	1	1	1	1
238	Contactor- Fan	24V 1PDT	056992205	1			
	Contactor- Fan	24V 1PDT	056992201		1	1	1
248	Stand Off						
	PC Board		802028115	5	5	5	5
	Edge-holders	(Comm card only)	668395501	4	4	4	4
264	Transformer		060614102	1	1	1	1
N/S	Sensor, DAT	10K/72”	669008901	1	1	1	1
N/S	Sensor, RAT	10K/72”	669008901	1	1	1	1
N/S	Sensor, EWT	10K/80”	107201601	1	1	1	1
N/S	Sensor, SLTS	10K/80”	107201601	1	1	1	1

N/S= Not shown on diagram.

* Used on any unit with the following applications:
2 Compressors/Stages, Supplemental Electric Heat, Multi-speed ECM Motors, and Hot Gas Bypass.

** Field-upgrading requires a Service Tool for com. card programming, com-card stand-off & main PCB jumper change.

Field Installed Accessories

Ball Valves, Relays & Motorized Valves

Description	Part Number
Auxiliary Relay- 24V, DC	106059701
Relay, Dry Contact, SPST-NO, 5VDC-In, AC/DC-Out	107229201
Combination Shutoff/Balancing Valve (1/2”) with Memory Stop (2/unit)	802026097
Valve Kit 1/2” w/Conduits	060977402
Pump Restart Relay Kit	061419001
Motorized Valve Kit 1/2” 2-Way Valve, Normally Open (NO), General Close-Off Pressure	668996001
Motorized Valve Kit 1/2” 2-Way Valve, Normally Open (NO), General Close-Off Pressure	668996002
Motorized Valve Kit 1/2” 2-Way Valve, Normally Closed (NC), High Close-Off Pressure	668996003
MicroTech III Motorized Valve Wire Harness (H8)	668995801

Filters and Filter Rack

Description	009	015-024
Filter Rack	106394401	106394402
Kit, Filter- 1" Throwaway	106535004	106535005
Kit, Filter- 2" Throwaway	060687119	060687120
Filter- 2” Throwaway	669684802	669684801

Hoses

Description	Specification	Part Number
Hose Assy- Fire Rated Condensate	3/4" X 2'	061300001
	3/4" X 3'	061269004
Hose Assy- Fire Rated Supply/Return	1/2" X 2'	061269001
	1/2" X 3'	061269002
Hose Assy- Plastic Condensate	3/4" X 30"	060687701
	3/4" X 36"	106665101
Flow Control Hose Kit- Fire Rated Supply/Return	0.5 GPM	106582901
Includes: Supply Ball Valve, Y-Strainer, and 24" Stainless Steel Hose.	1.0 GPM	106582902
Return Flow Controller, Ball Valve, (2) P/T, 24" Stainless Steel Hose.	1.5 GPM	106582903
	2.0 GPM	106582904
	2.5 GPM	106582905
	3.0 GPM	106582906
	3.5 GPM	106582907
	4.0 GPM	106582908
	4.5 GPM	106582909
	5.0 GPM	106582910
	5.5 GPM	106582911
	6.0 GPM	106582912

Field Installed Accessories
Continued

Thermostats & Wall Plates

Description	Part Number
Programmable Wall Thermostat & Remote Wall Sensor	106710801
Wall Stat: 7-day Programmable, 2 Heat/2 Cool, ACO, AC/DC with Wall Plate	668375301
Wall Stat: Non- Programmable, 2 Heat/2 Cool, ACO, AC/DC, NSB & OR with Wall Plate	668375401
Insulated Wall Plate	107096101
*Remote Temperature Sensor (Unbranded)	107096001
*Remote Temperature Sensor (McQuay Branded)	667720401

* For use with thermostats #668375301 & #668375401

MicroTech III Temperature Sensors

Part No.	Tenant Override	Set Point Adjustment	Status LED	Fan & Mode Switches
669088101	Yes	No	No	No
668900801	Yes	55˚ to 95˚F (12˚ to 35˚C)	Yes	Yes
669088201	Yes	-3˚ to +3˚F (-1.5˚ to 1.5˚C)	No	Yes

Note: Can only be used in conjunction with a Communication (Comm.) card. See OM 931 for required jumper settings.

MicroTech III Unit Control Accessories

Description	Part Number
** Multiple Unit Control Panel: Allows a master unit controlled by a T'Stat, to operate up to 3 secondary units Not Recommended for use with a Boilerless System Kit	056794201
Boilerless System Kit with I/O Expansion Board	910110355
Boilerless System Kit without I/O Expansion Board	910110353
Boilerless System Kit- Single Compressor Units	062522201

** Kit components listed below

Multiple Unit Control Panel Kit

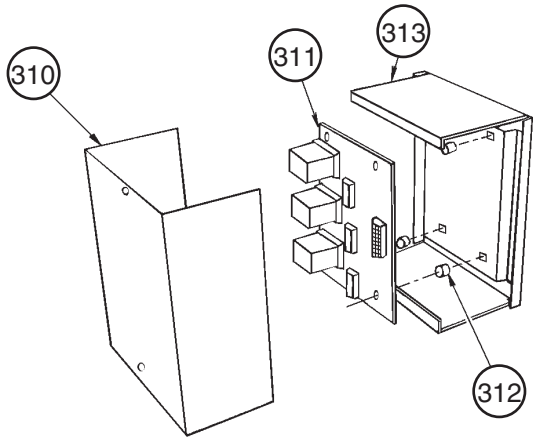

Ref. No.	Description	Part No.	Qty.
310	Cover- Control Box	106436101	1
311	Circuit Board	056794001	1
312	Stand Off- Circuit Board	802028090	6
313	Box	850007827	1

Critical Daikin Applied OEM Parts Are What Your Daikin Applied HVAC Unit Needs!

Enfinity™ Ceiling Mounted WSHP

WCCH, WCCW

Unit Sizes 009- 024, 50HZ

Design 4

CRITICAL COMPONENTS		MODEL	UNIT SIZE	VOLTAGE	PART NUMBER
CONTROL					
Control Board, MicroTech III		ALL	ALL	N/A	668105601
I/O Expansion Board		ALL	ALL	N/A	668105702
LonMark Comm Card		ALL	ALL	N/A	107293070
BACnet Comm Card		ALL	ALL	N/A	107293071
COMPRESSOR					
Compressor	5500 BTUH	ALL	009	230V	910104555
Compressor	9800 BTUH	ALL	015	230V	668951602
Compressor	11900 BTUH	ALL	019	230V	669639903
Compressor	14800 BTUH	ALL	024	230V	669639803
BLOWER MOTOR					
1/8 HP	Std (C10=01)	ALL	009	230V	106646503
1/3 HP	Std (C10=01)	ALL	015 - 024	265V	060961802
1/3 HP	ECM & Program (C10=04)	ALL	015	115/230V	669678921
1/3 HP	ECM & Program (C10=04)	ALL	019	115/230V	669678922
1/3 HP	ECM & Program (C10=04)	ALL	024	115/230V	669678923
BLOWER HOUSING & WHEEL					
Blower Housing		ALL	009	N/A	060699606
Blower Housing		ALL	015 - 024	N/A	060699604
Wheel		ALL	009	N/A	060627401
Wheel		ALL	015 - 024	N/A	802000037
VALVES					
Reversing Valve		ALL	009	N/A	910110425
Reversing Valve		ALL	015 - 024	N/A	910110427
Solenoid, Reversing Valve		ALL	ALL	N/A	910110439
SENSOR					
Air Temp Sensor (DAT, RAT)	10K/72”	ALL	ALL	N/A	669008901
Water Temp Sensor (LWT, SLTS)	10K/80”	ALL	ALL	N/A	107201601

Call Your Local Daikin Applied Parts Distributor For All Your Parts Needs.
To Locate A Distributor, Go To www.DaikinApplied.com or Call 1-800-37PARTS